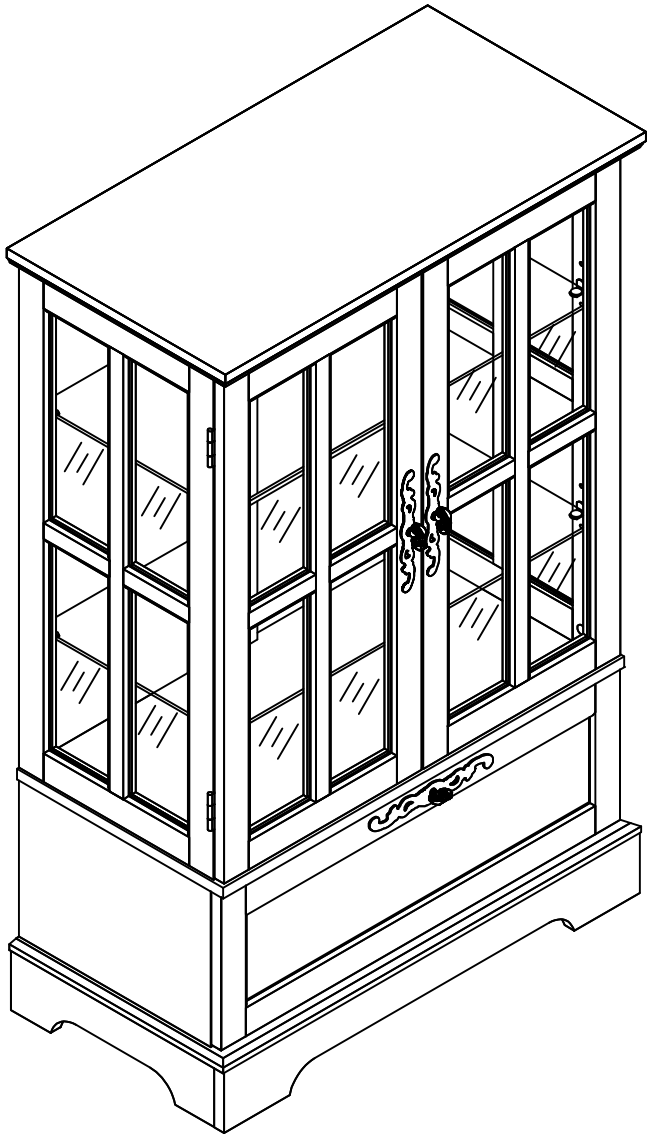

TWO DOORS GLASS CABINET

Assembly Instruction

NOTE: This instruction manual contains IMPORTANT safety information. Please read carefully before assembling the product

List of Parts

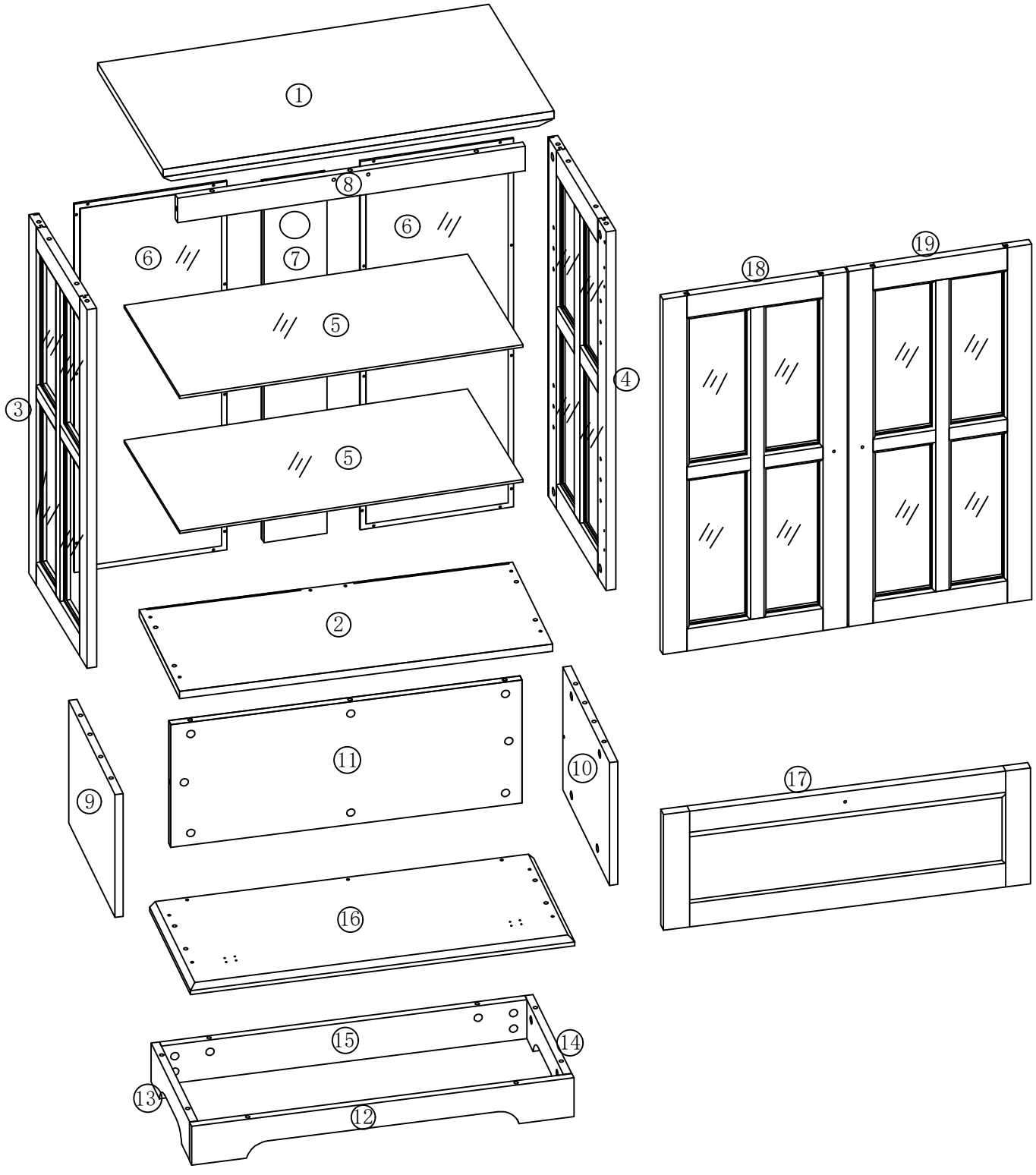

Hardware

A x 49+4	B x 49+4	C x 16+2	D x 6+2	E x 3
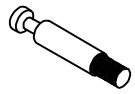 Ø6 x 34mm	 Ø15 x 10mm	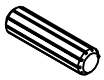 Ø8*30mm	 Ø3*12mm	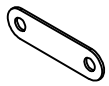

F x 3	G x 3	H x 12+2	I x 38+4	J x 2
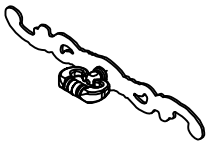	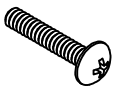 Ø4*25mm	 Ø20mm	 Ø3.5*14mm	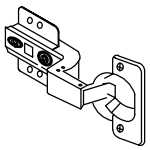

K x 8+1	L x 24+2	M x 4	N x 2	O x 1
	 Ø3*12mm	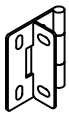	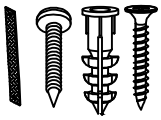	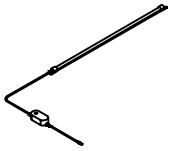

P x 1	Q x 1	R x 1	S x 2+1
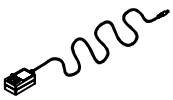	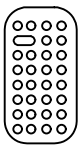	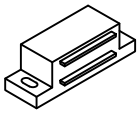 45*14*14 mm	 Ø3*16mm

STEP1

A x 8
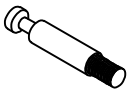
Ø6 x 34mm

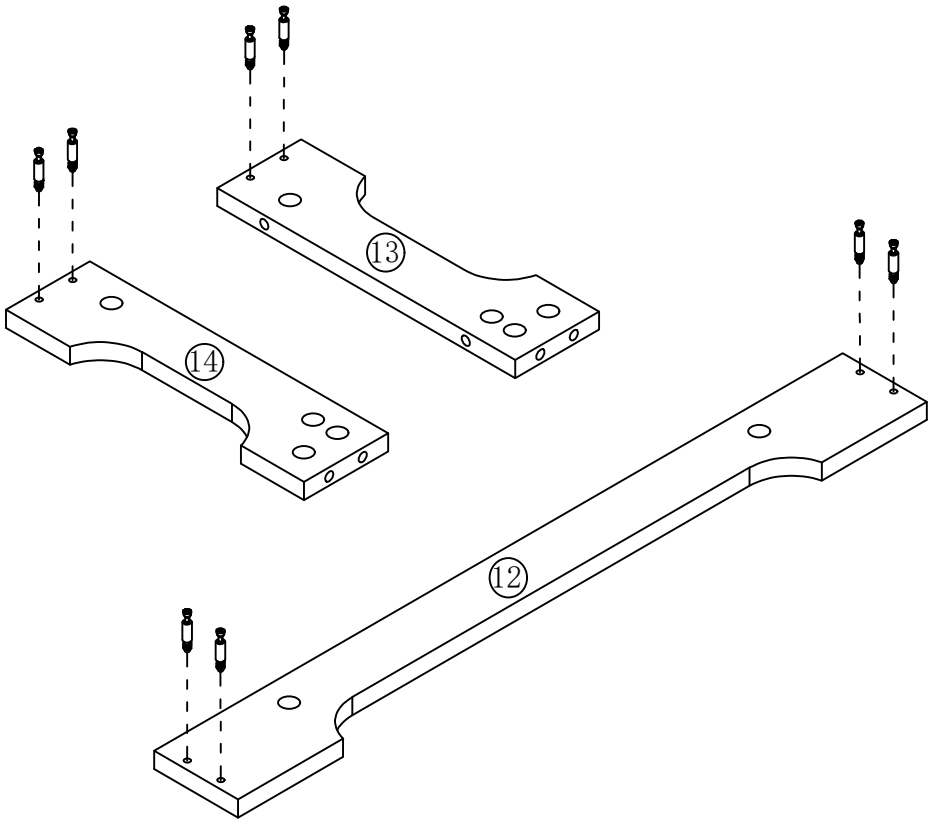

STEP2

B x 4

Ø15 x 10mm

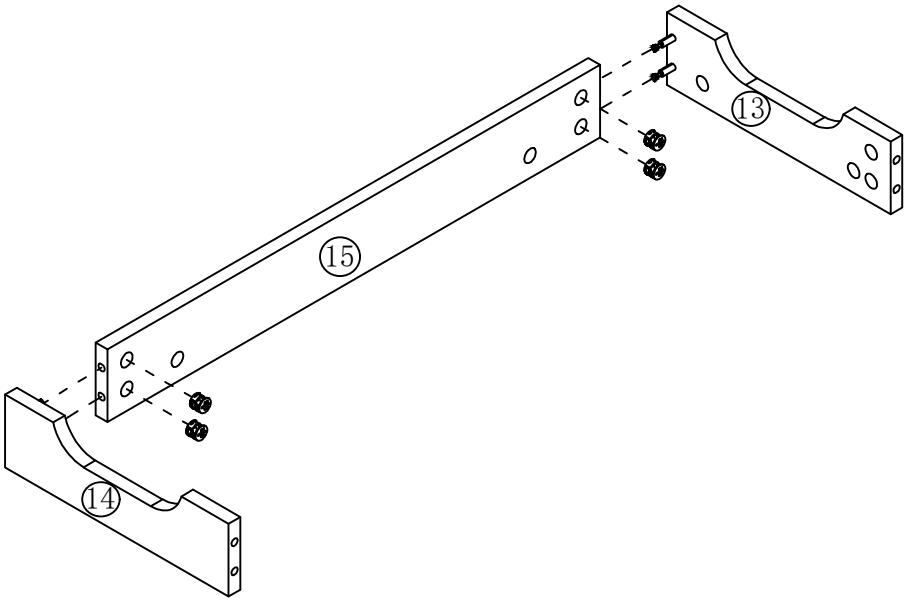

STEP3

B x 4

Ø15 x 10mm

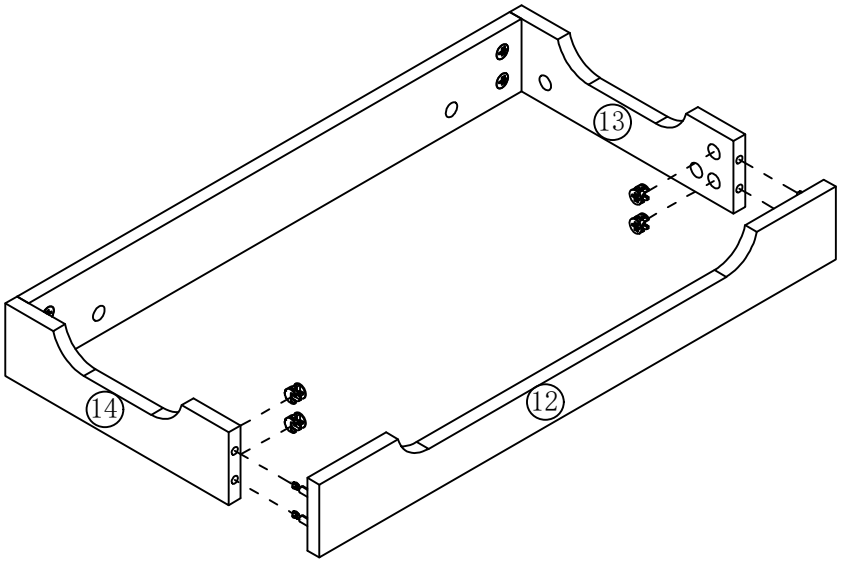

STEP4

A x 15
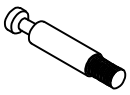
Ø6 x 34mm

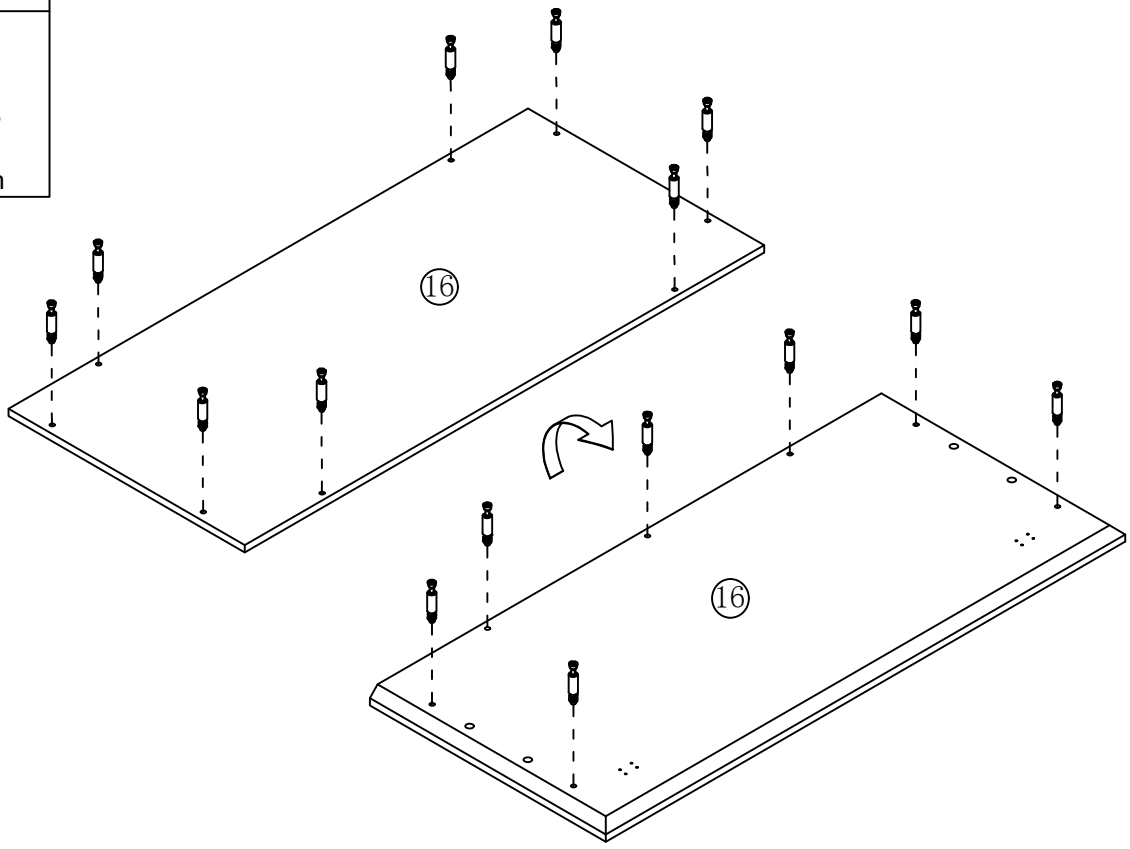

STEP5

B x 8

Ø15 x 10mm

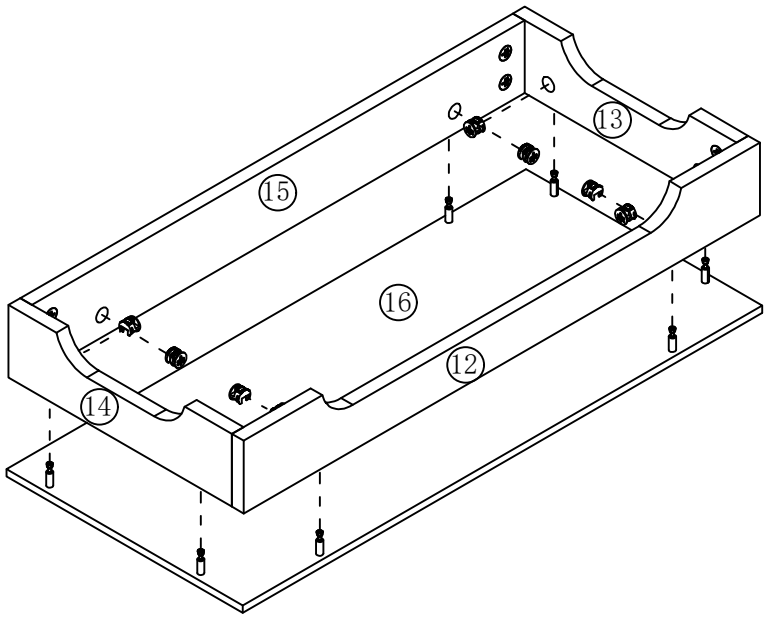

STEP6

A x 2
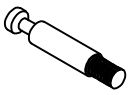
Ø6 x 34mm

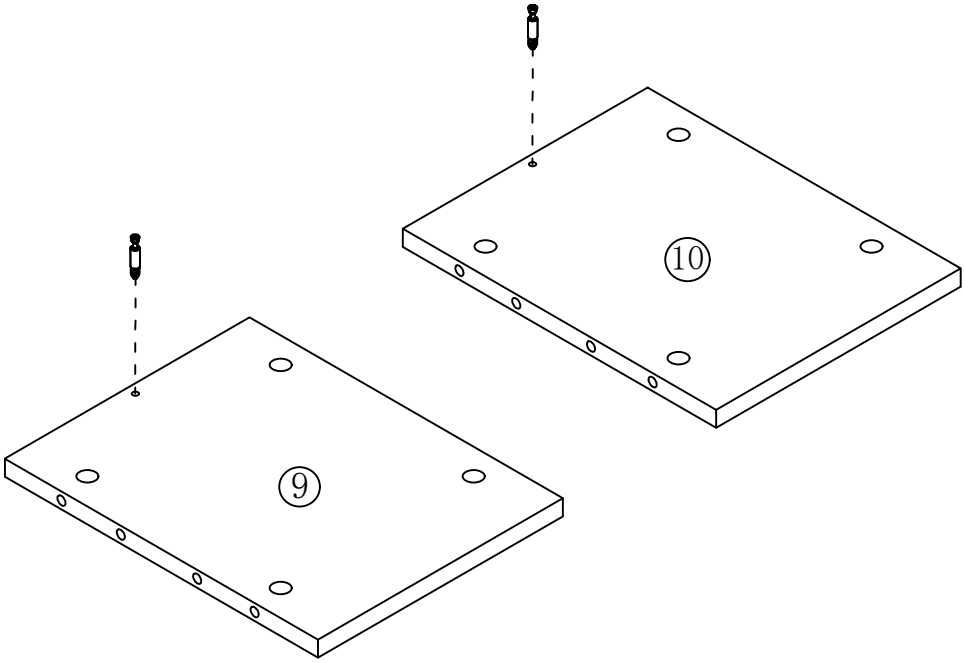

STEP7

B x 2

Ø15 x 10mm

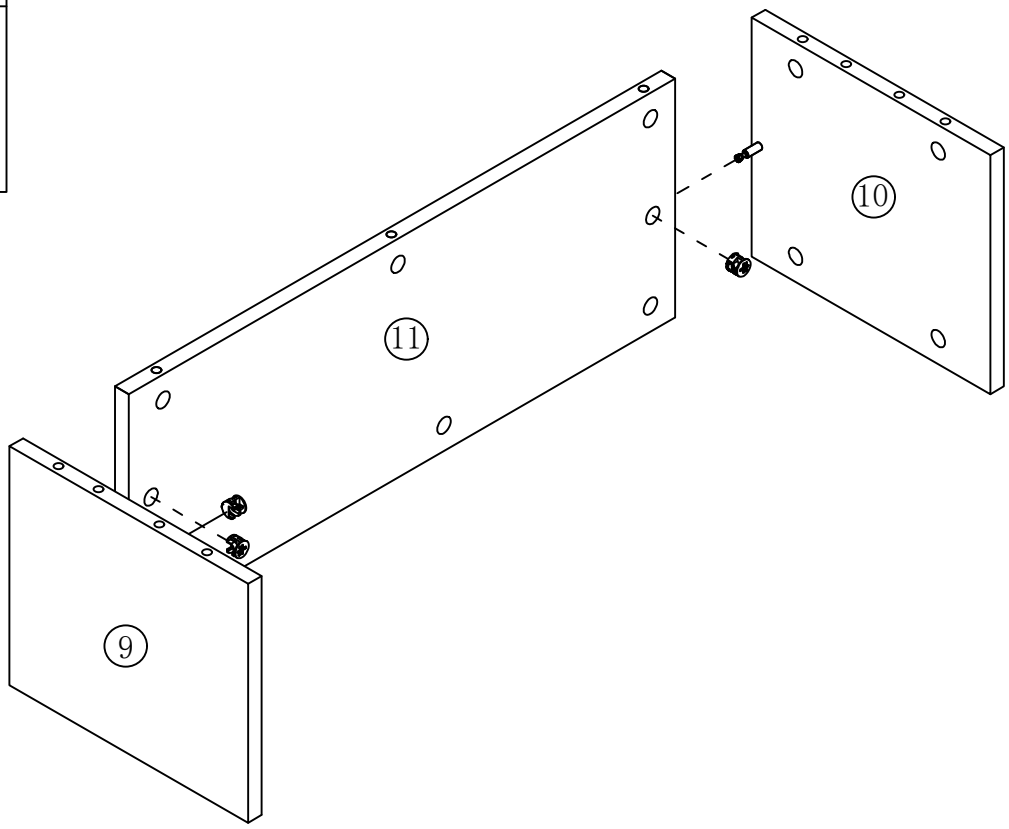

STEP8

B x 7

Ø15 x 10mm
C x 4
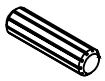
Ø8*30mm

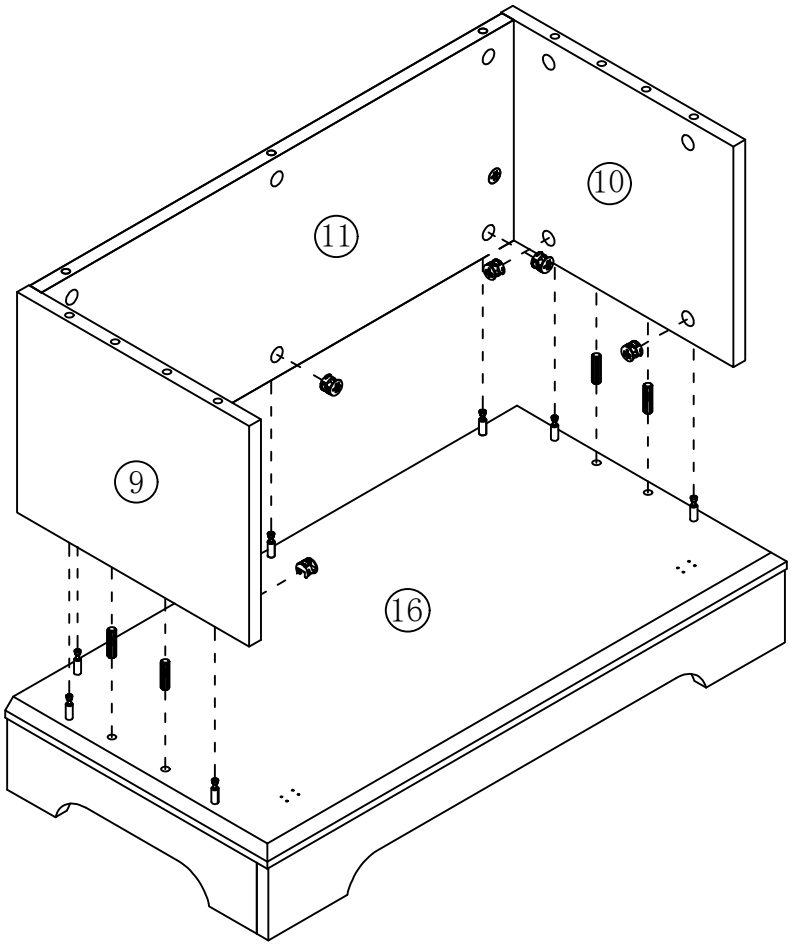

STEP9

A x 13
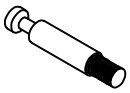
Ø6 x 34mm
R x 1
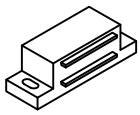
45*14*14 mm
S x 2
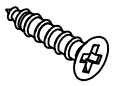
Ø3*16mm

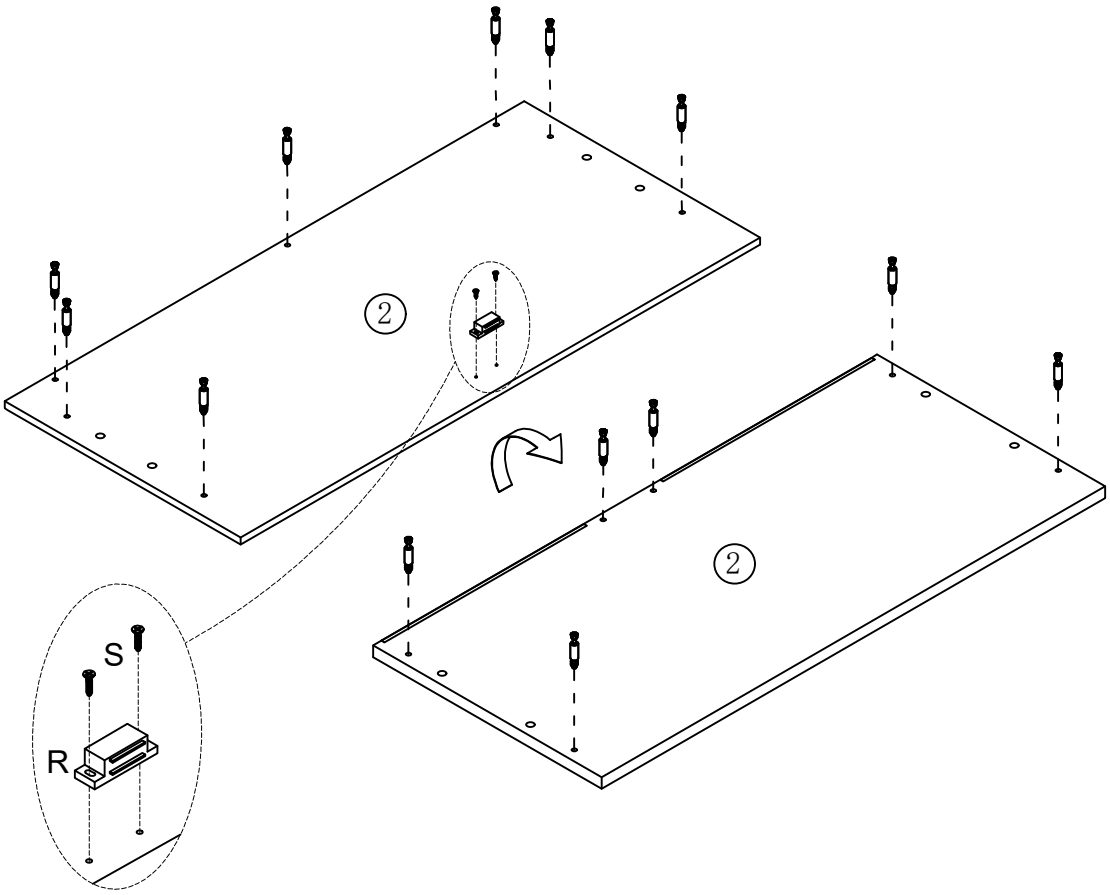

STEP10

B x 7

Ø15 x 10mm
C x 4
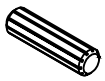
Ø8*30mm

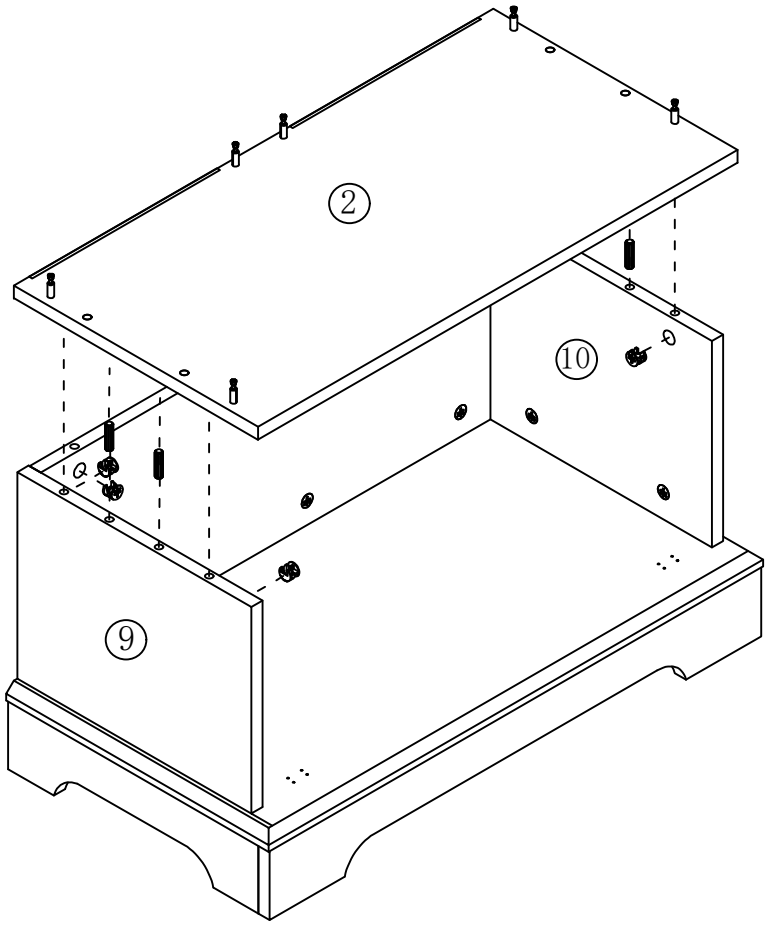

STEP11

A x 2
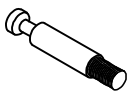
Ø6 x 34mm

STEP12

B x 2

Ø15 x 10mm

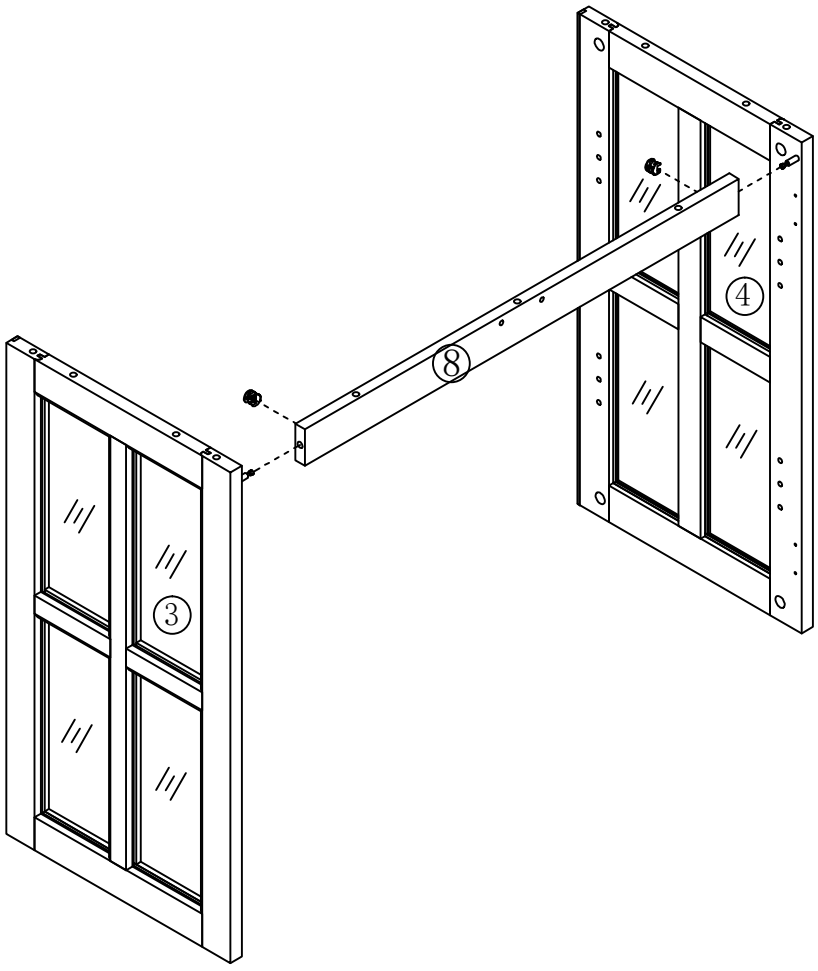

STEP13

B x 6

Ø15 x 10mm
C x 4
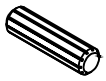
Ø8*30mm

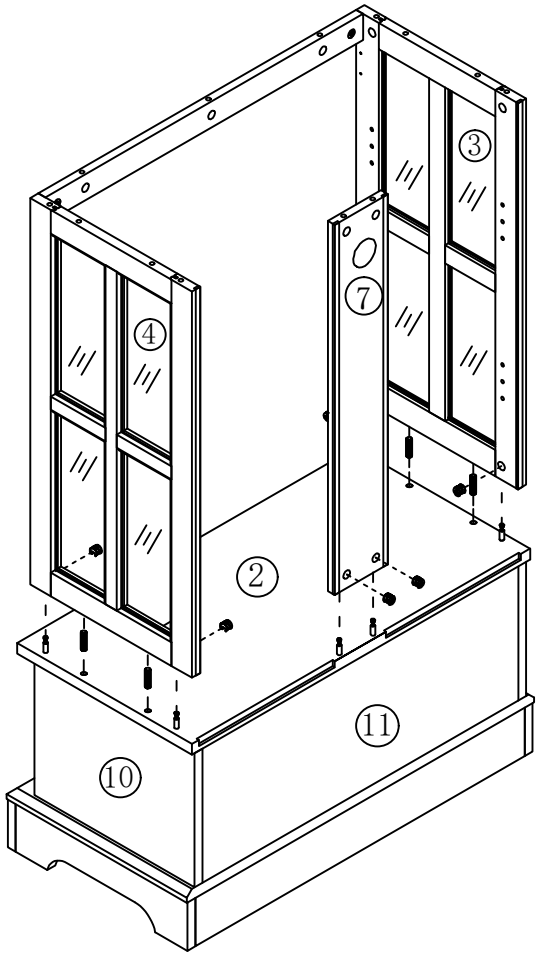

STEP14

A x 9
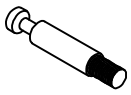
Ø6 x 34mm

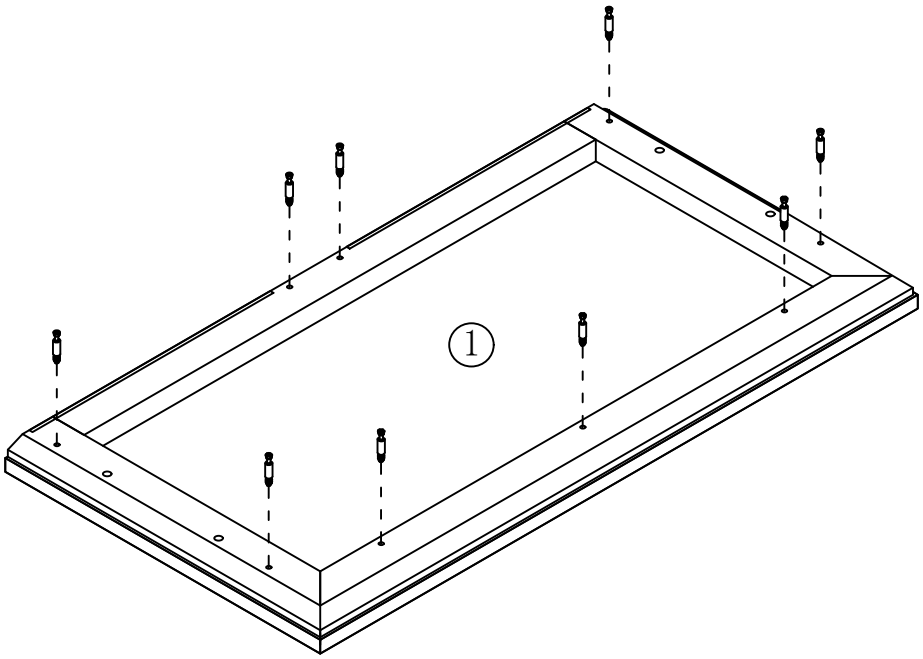

STEP15

I x 2

Ø3.5*14mm

O X 1
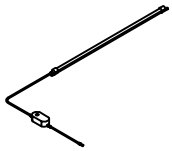

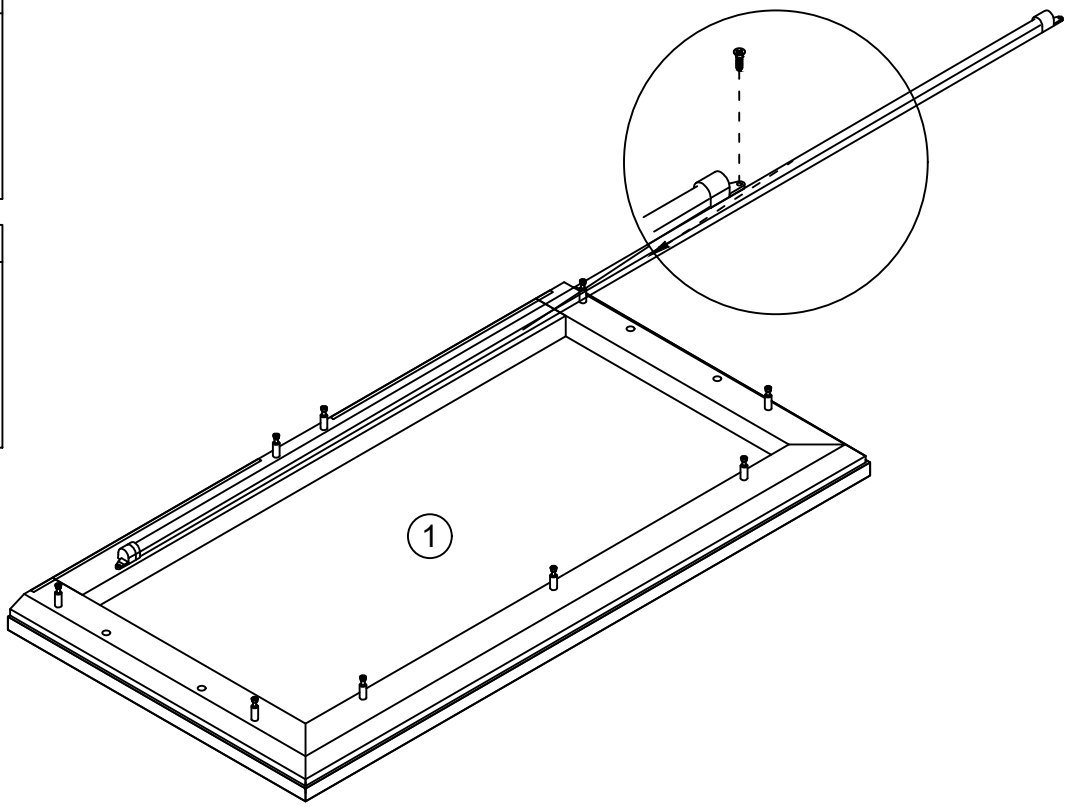

STEP16

B x 9

Ø15 x 10mm
C x 4
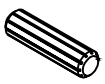
Ø8*30mm

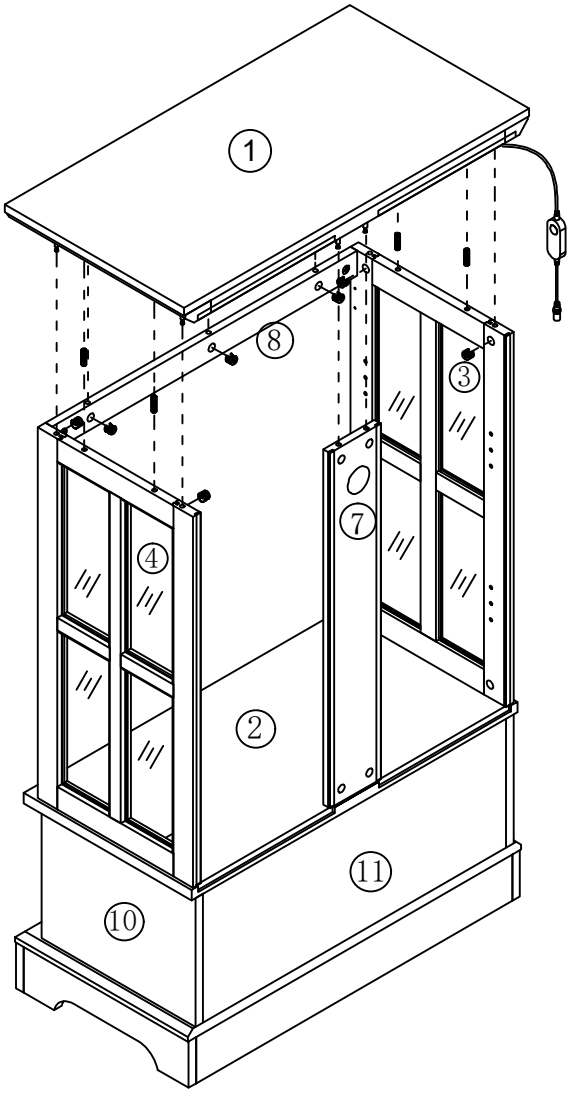

STEP17

L x 24

Ø3*12mm

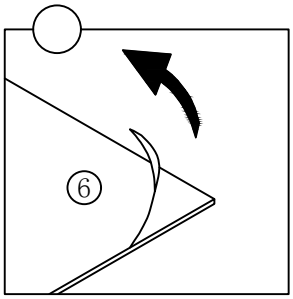

Remove protective film
on the mirror panel.

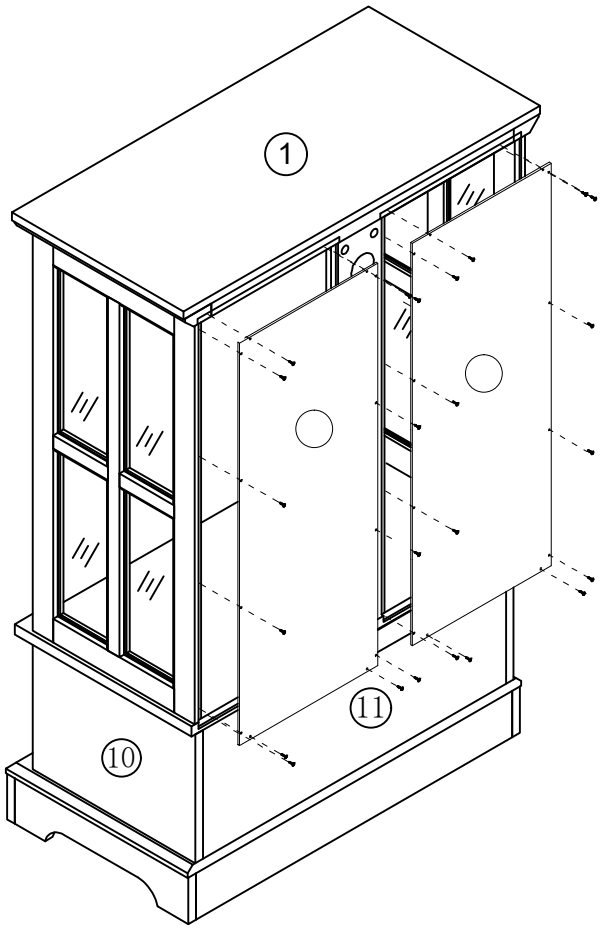

STEP18

H x 12

Ø20mm

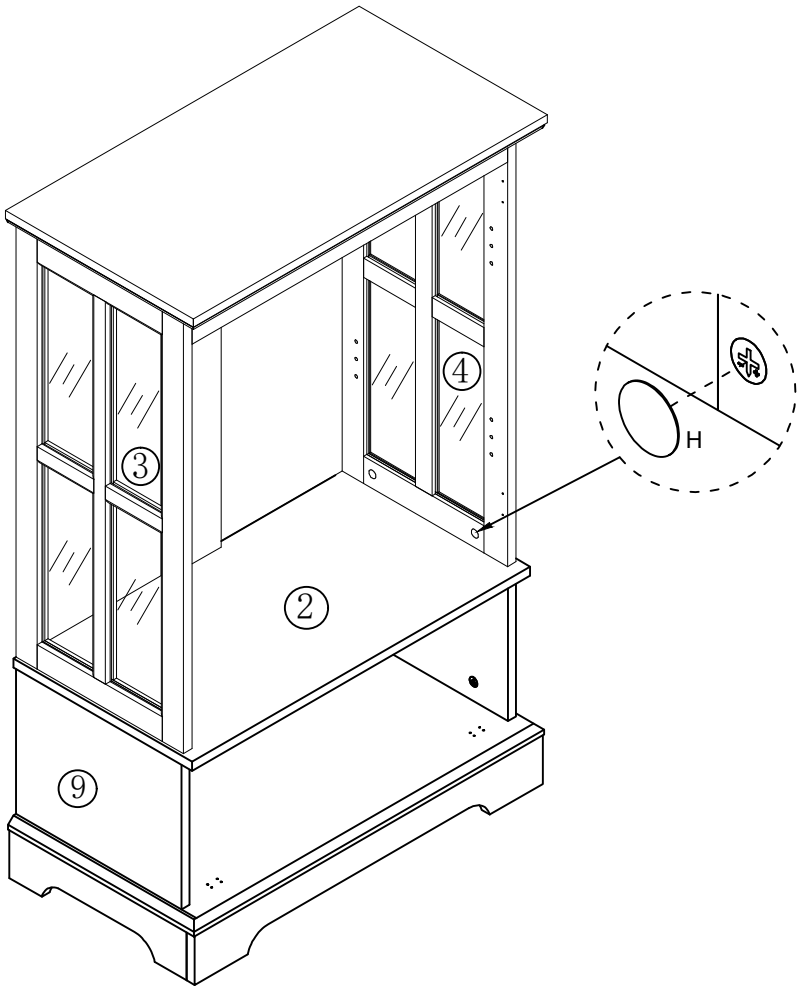

STEP19

I x 8

Ø3.5*14mm
M x 4
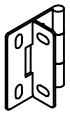

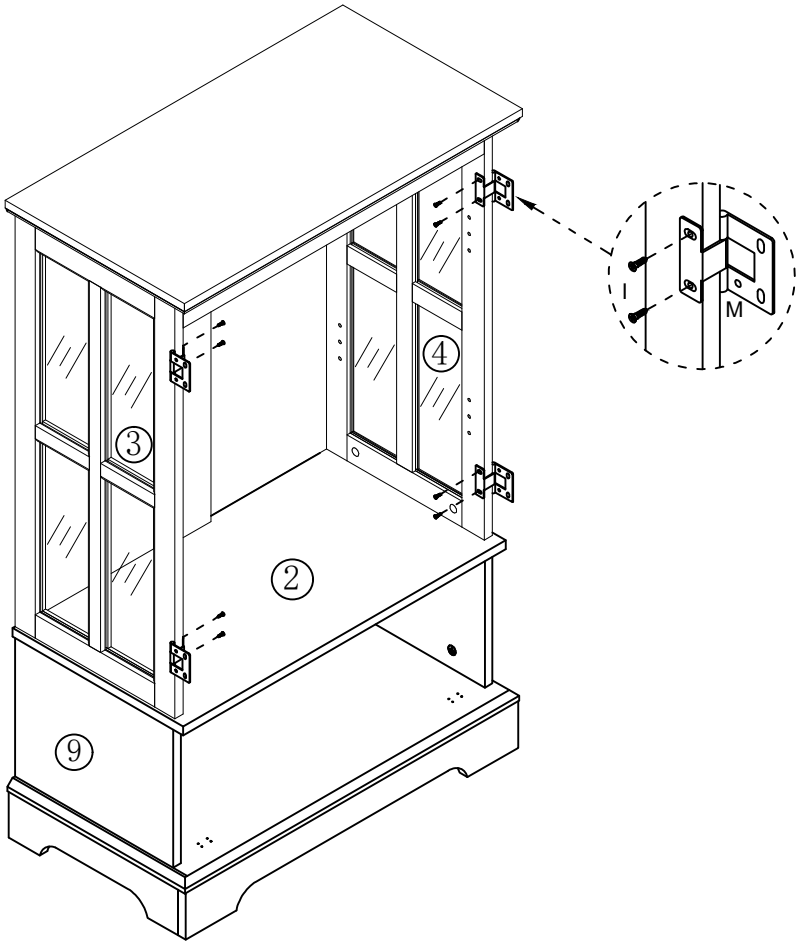

STEP20

K x 8


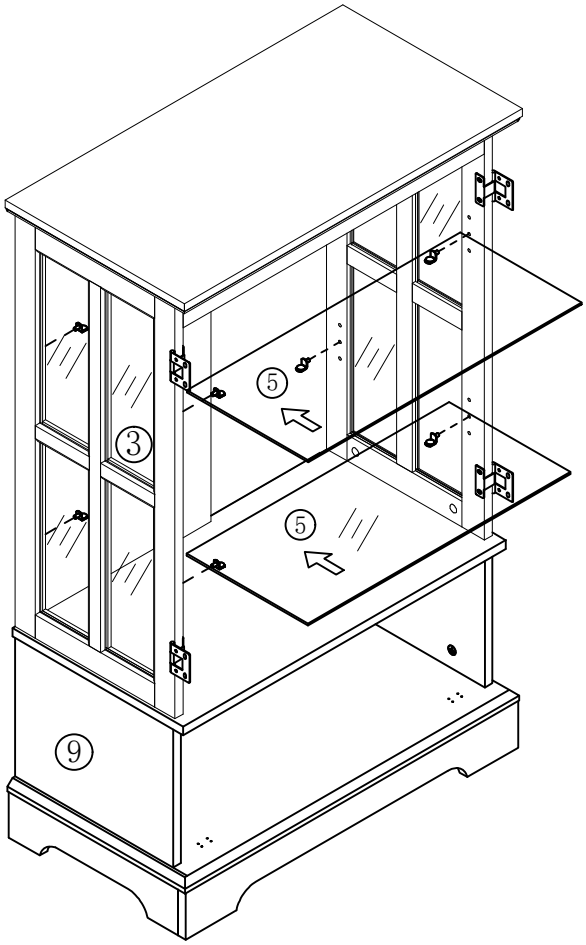

STEP21

F x 2

G x 2
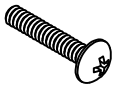 Ø4*25mm
D x 4
 Ø3*12mm
E x 2
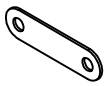

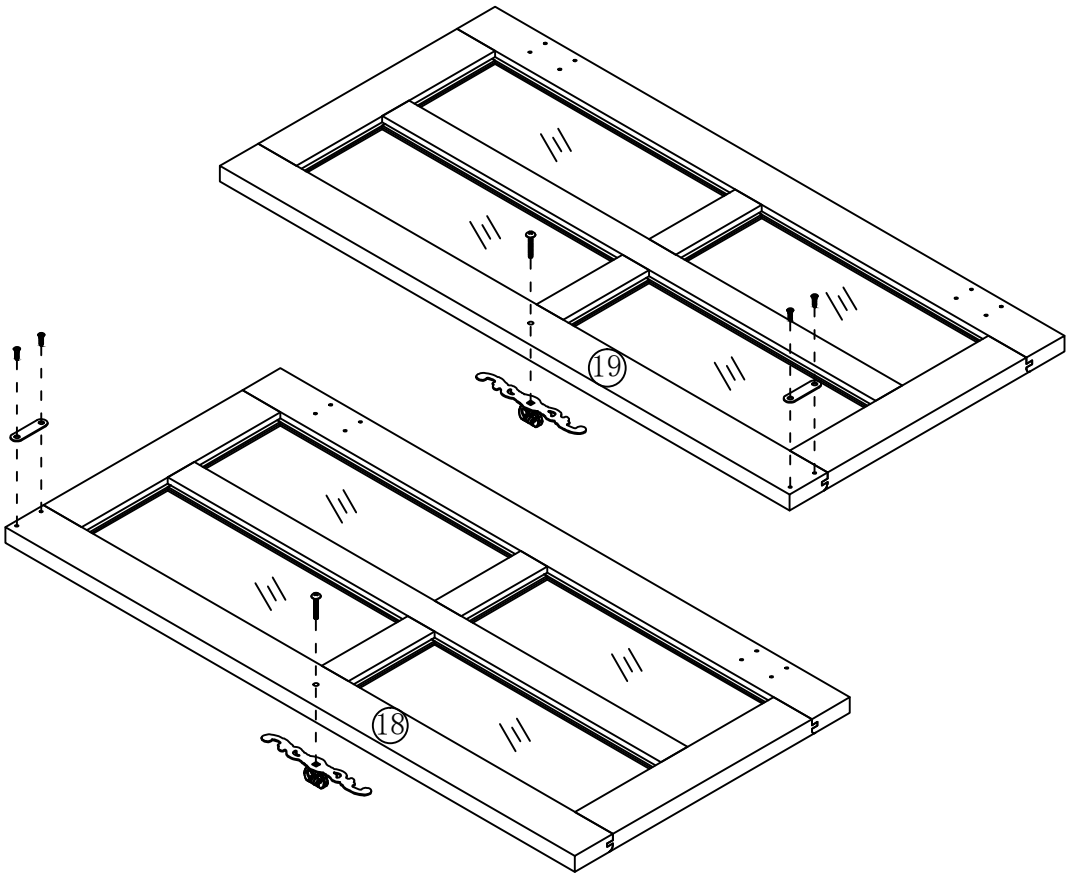

STEP22

I x 16
 Ø3.5*14mm

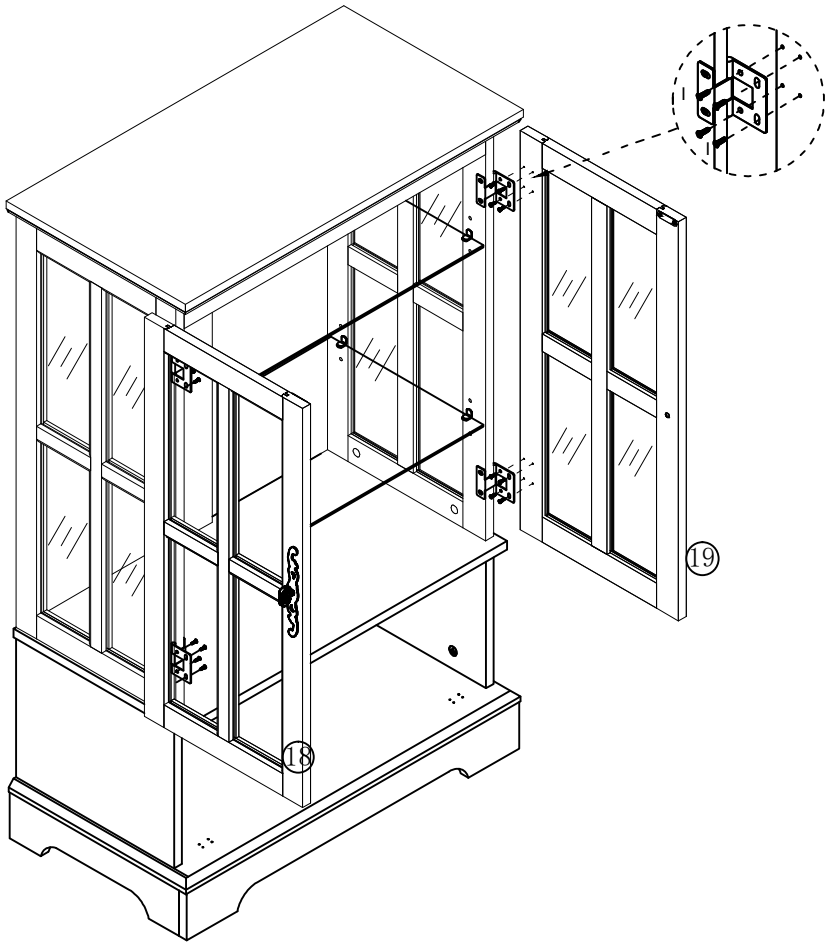

STEP23

D x 2	F x 1
 Ø3*12mm	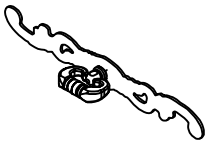
E x 1	**G x 1**
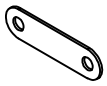	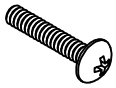 Ø4*25mm
I x 4	
 Ø3.5*14mm	
J x 2	
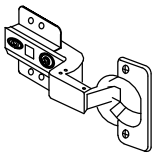	

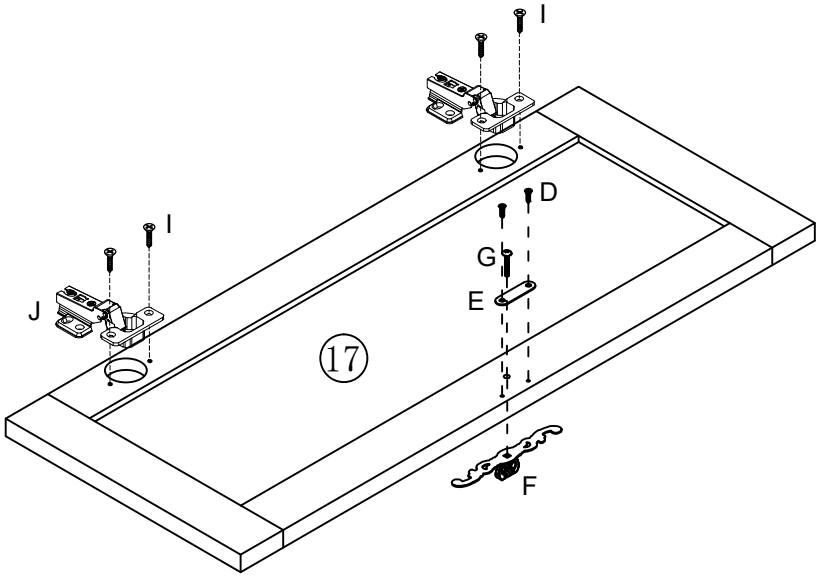

STEP24

I x 8
 Ø3.5*14mm

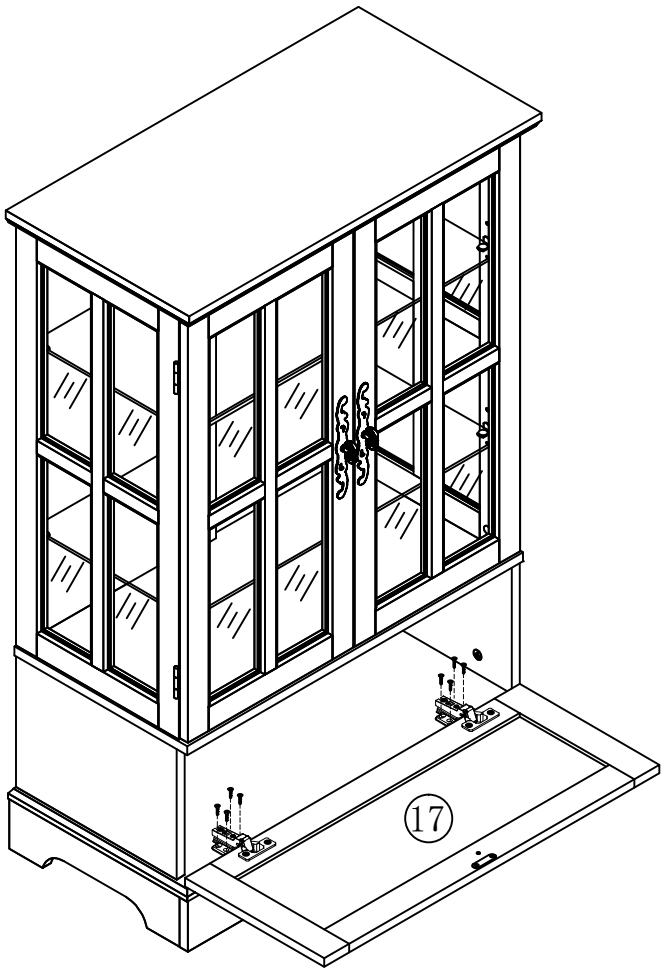

STEP25

N x 2	P X 1	Q X 1
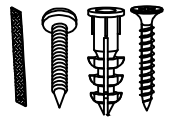	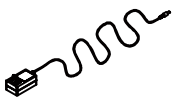	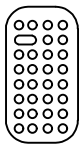

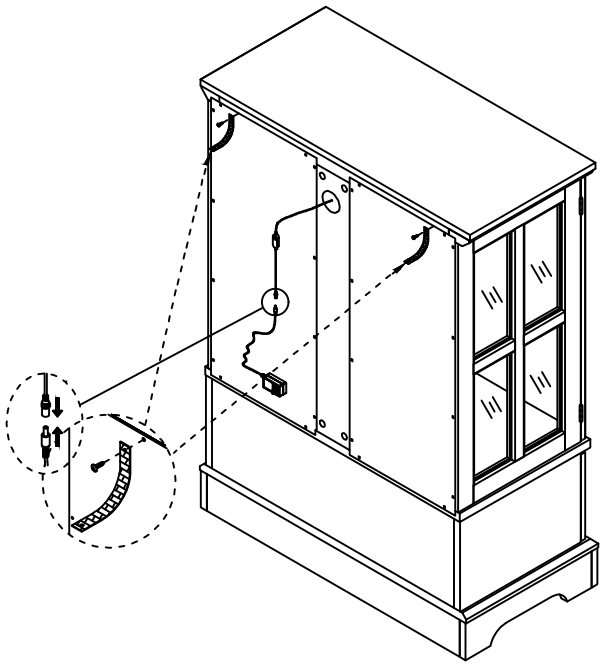

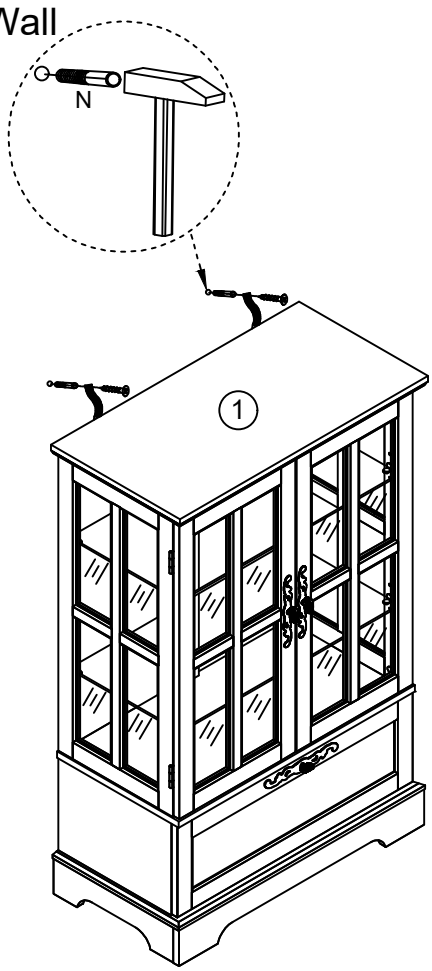

STEP26

