Installation Instruction

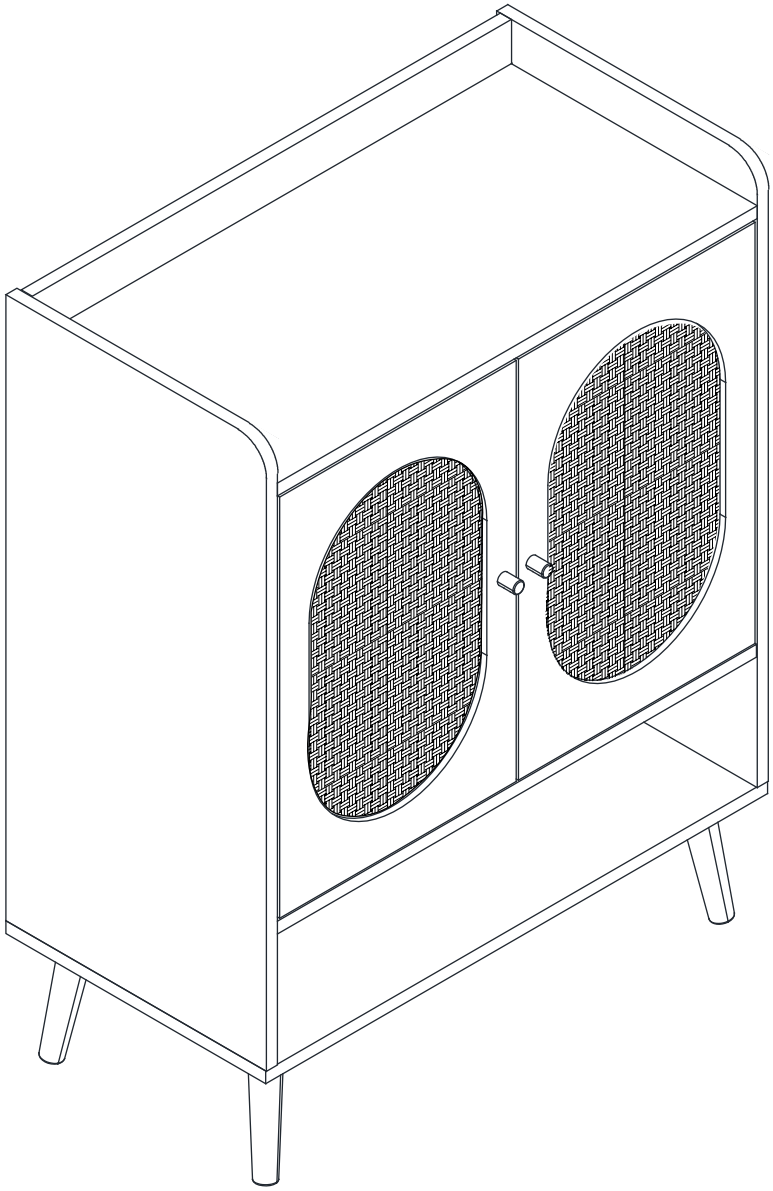

Product name

---

2 Door Shoe Cabinet

Ver.1.0 20240530

Assembling

What you need

- Use the packaging carton as a working surface to prevent product damage during assembly
- Phillips head screwdriver

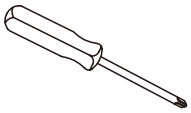

Weight Limitation

40 lbs table top | 22 lbs per shelf

2 PERSONS

What's included

Code	Description	Qty
A	Cam Bolt M6X35MM	10
B	Cam Lock 15X10MM	10
C	Wooden Dowel M6X30MM	14
D	Screw M4X14MM	22
E	Screw M4X35MM	6
F	Plastic Pin	4
G	Handle	2
H	Bolt M4X22MM	2
I	Magnetic Door Catcher	2
J	Screw M3X14MM	12
K	Door Metal Plate	4
L	Screw M3X12MM	4
M	Metal Pin	4
N	Metal Support	8
O	Nylon Strap	2
P	Plastic Corner Support	8
Q	Anchor M6X30MM	2
R	Screw M4X35MM	2

The Hardwares

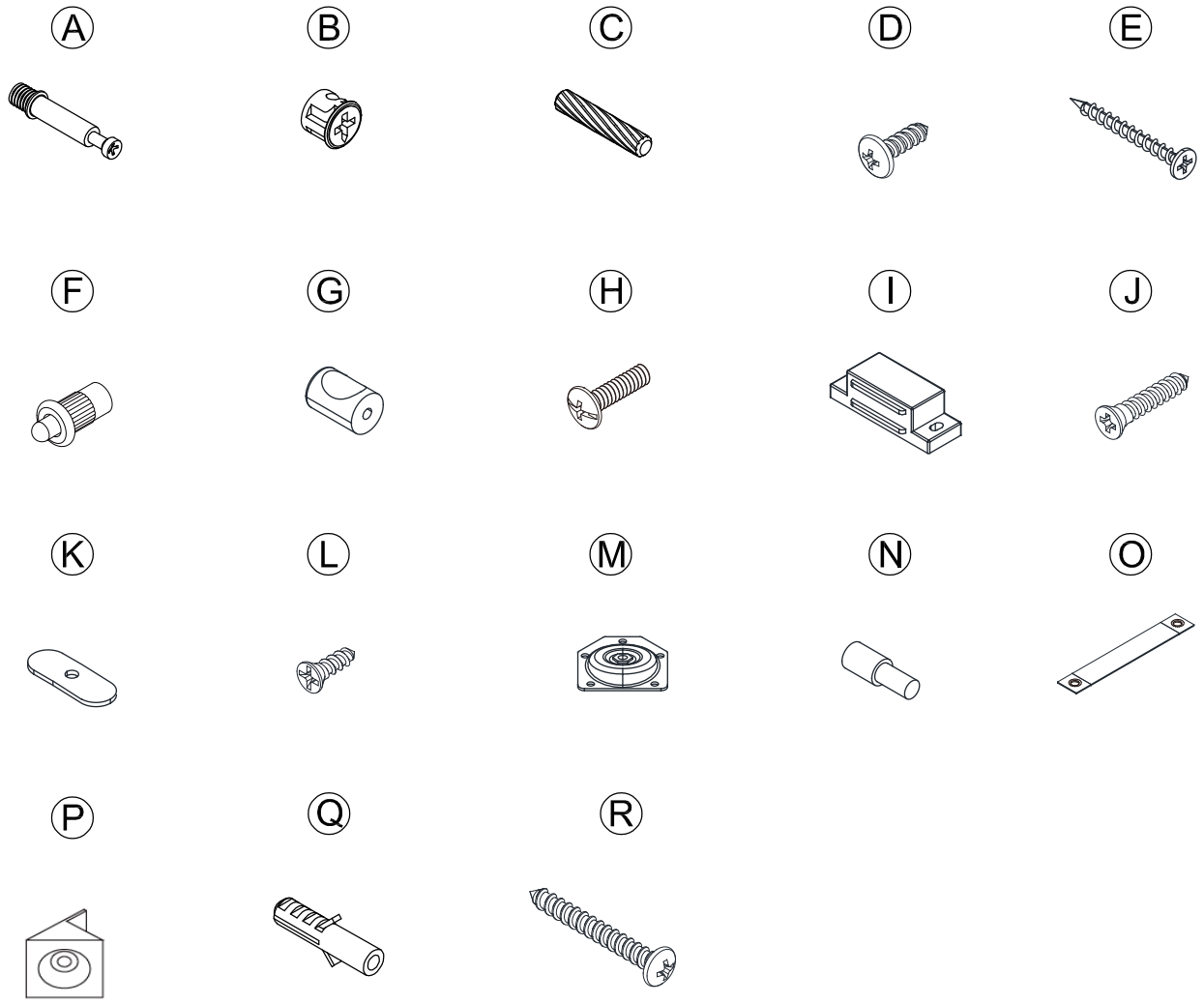

IMPORTANT:

1. Do not tighten bolts / screws completely until all bolts / screws are lined up and inserted into holes.
2. Do not over tighten screws and bolts to avoid stripping.
3. Please use hand tools to assemble this product. Do not use power tools.
4. Must need 2 people to assemble this product.

Included Accessories

Code	Description	Qty
1	Cabinet Top	1
2	Left Side Panel	1
3	Right Side Panel	1
4	Bottom Panel	1
5	Flexible Shelf	2
6	Shelf	1
7	Back Stretcher	1
8	Back Panel	2
9	Plastic Strip	1
10	Door	2
11	Feet	4

Accessories

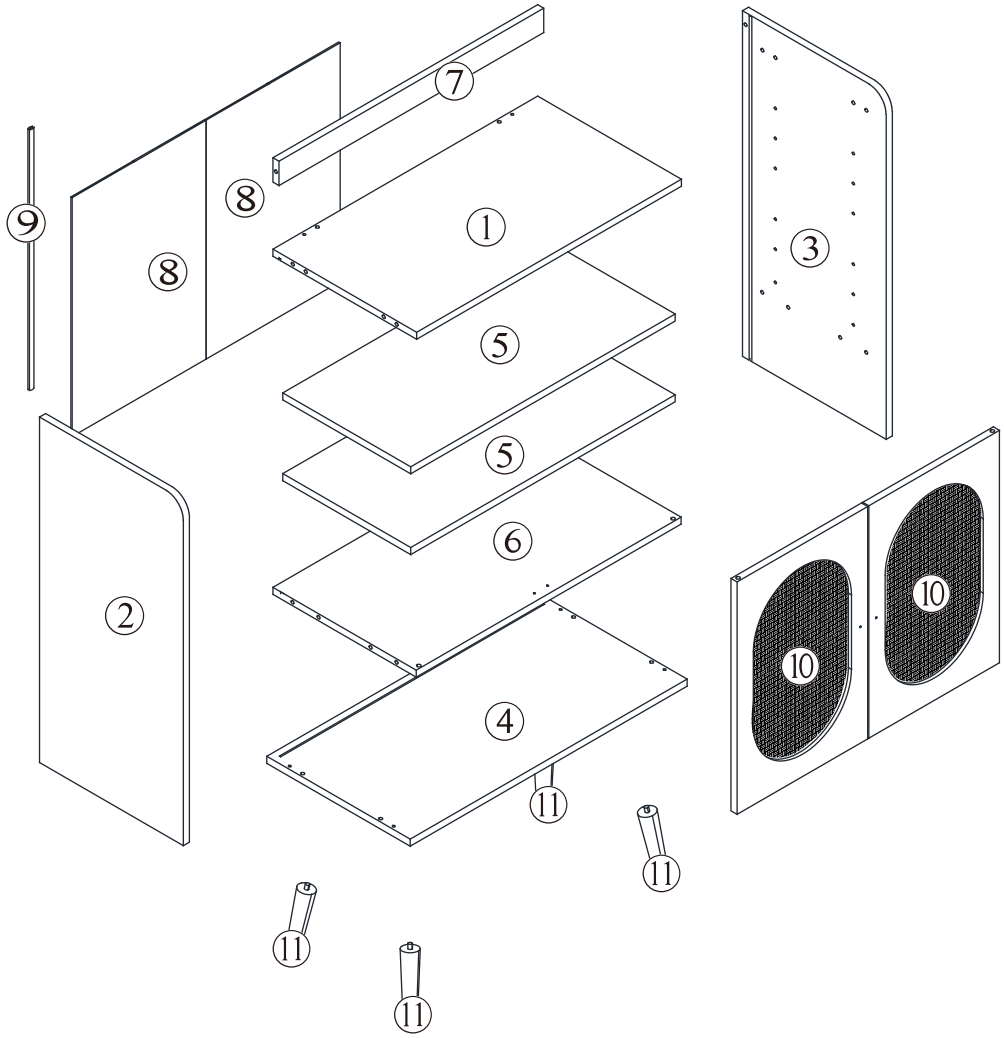

Noted :

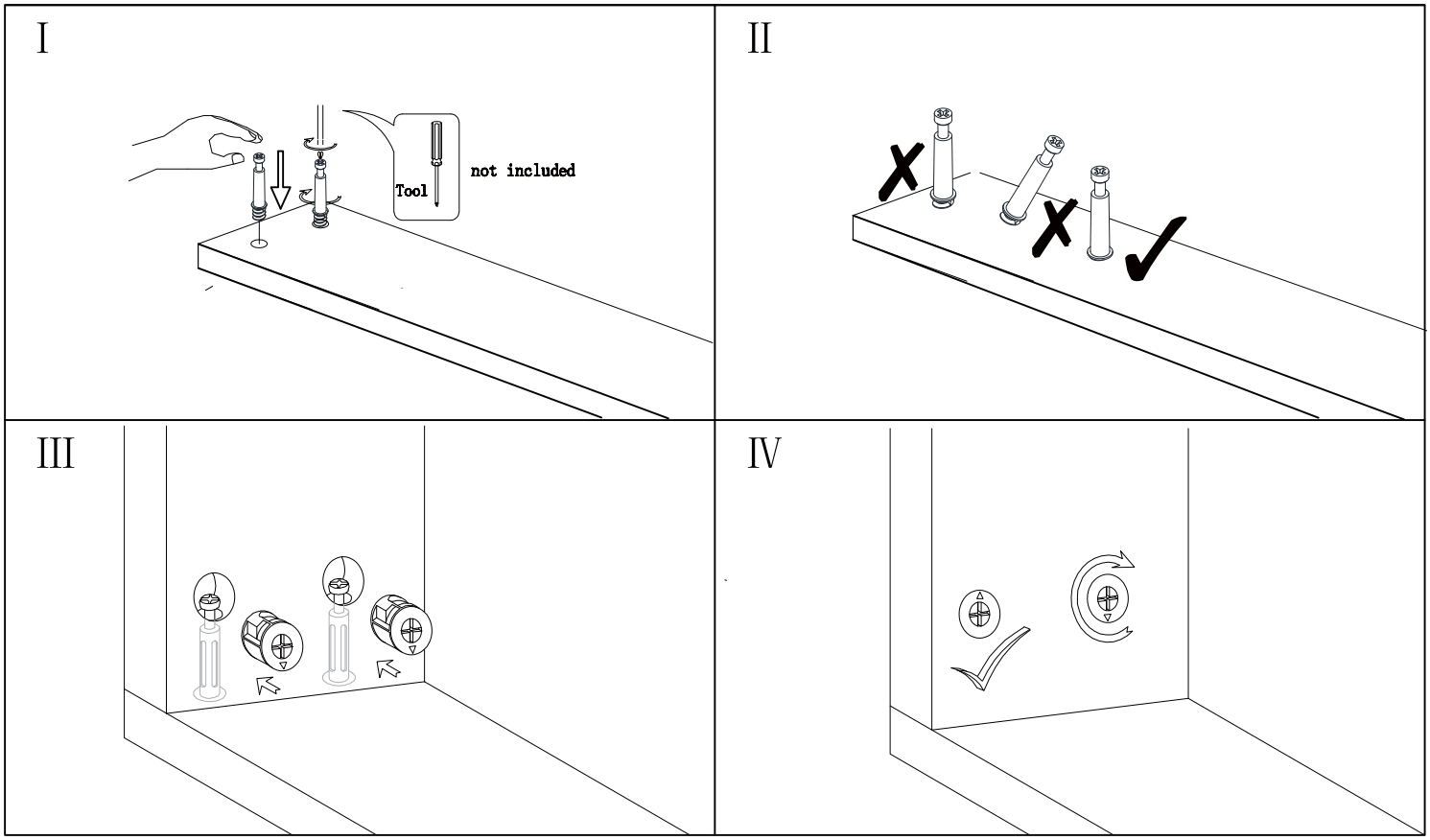

STEP 1

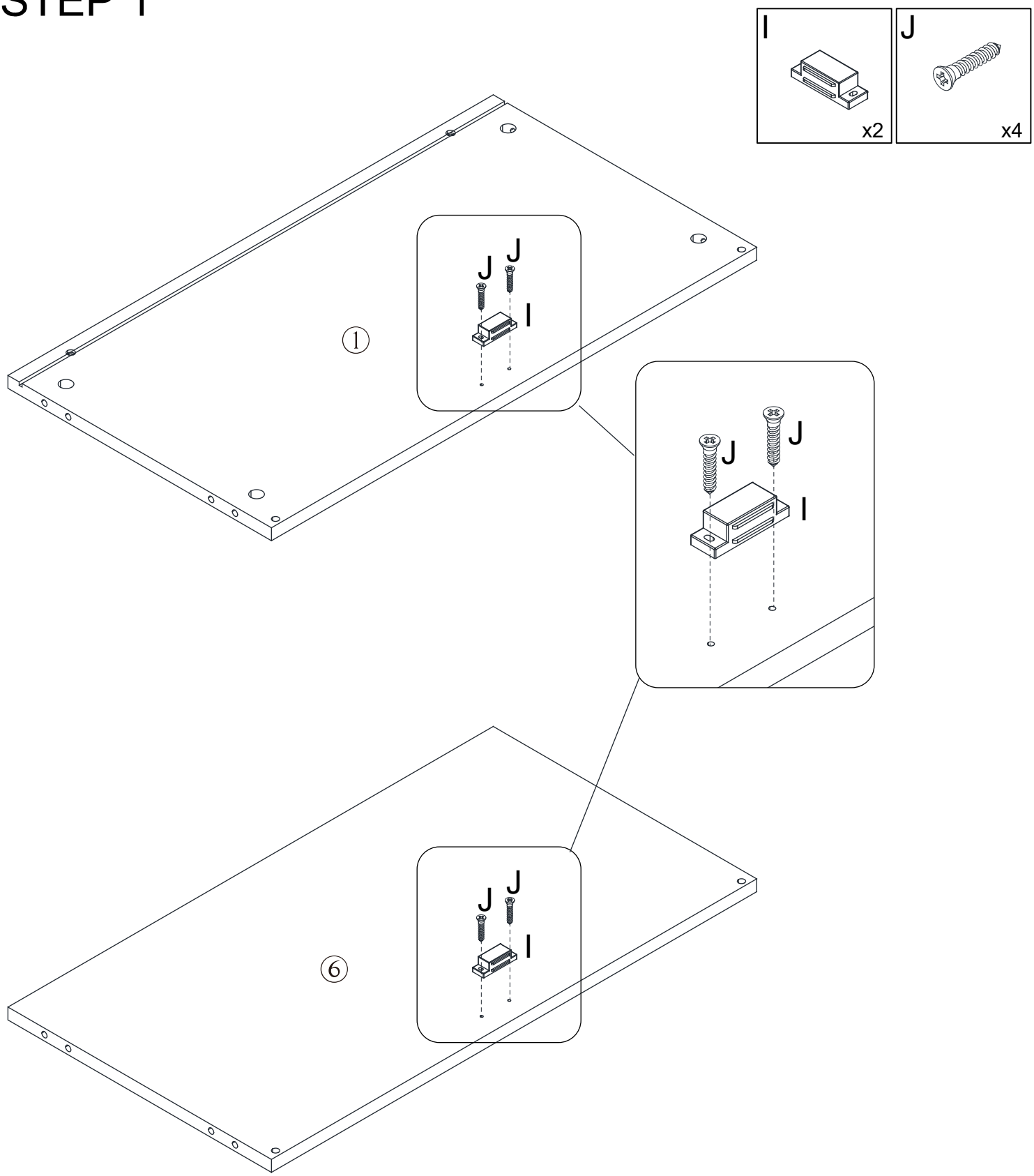

STEP 2

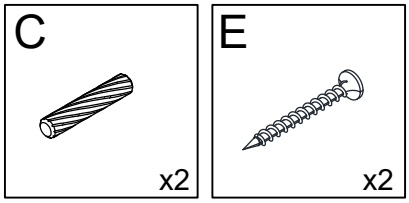

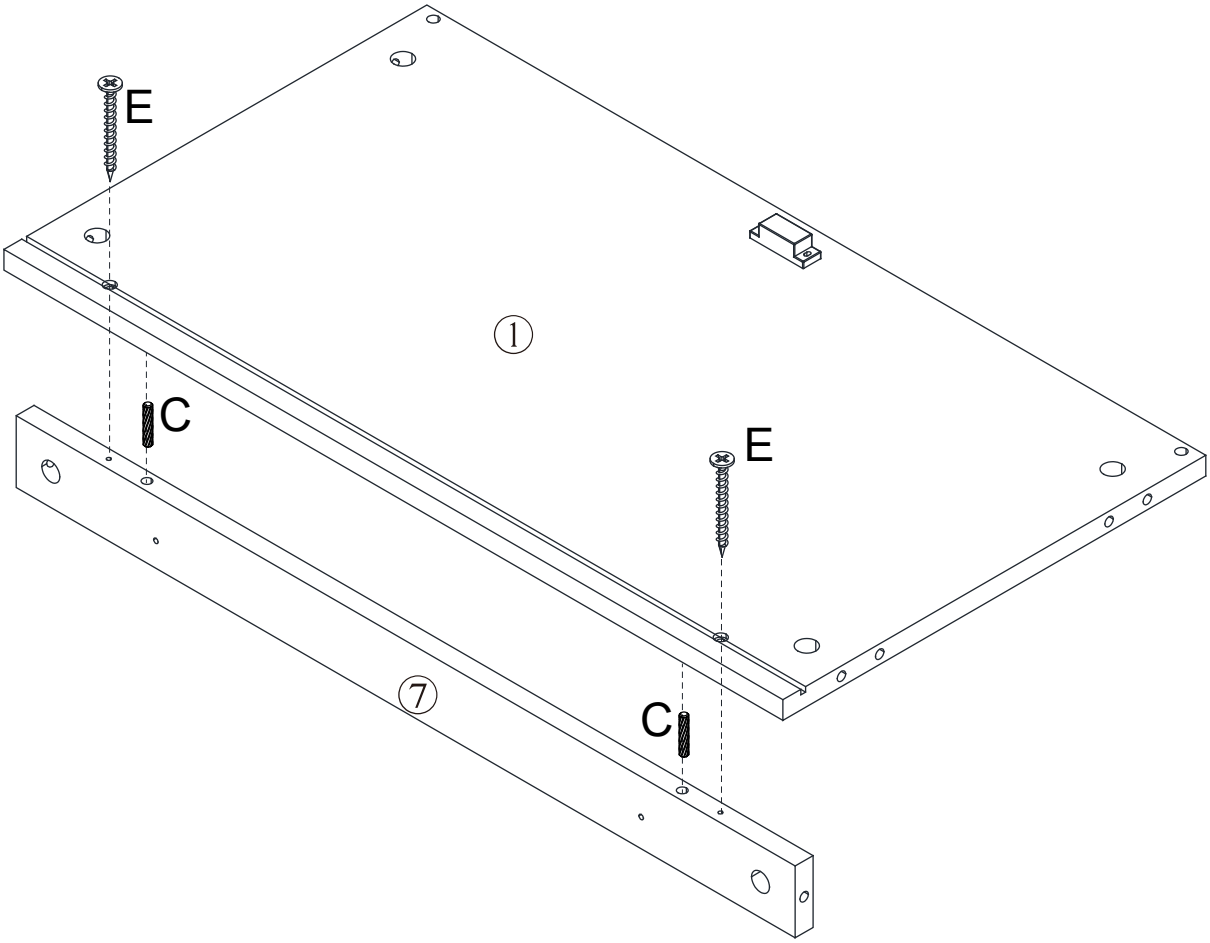

STEP 3

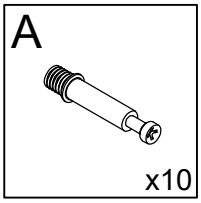

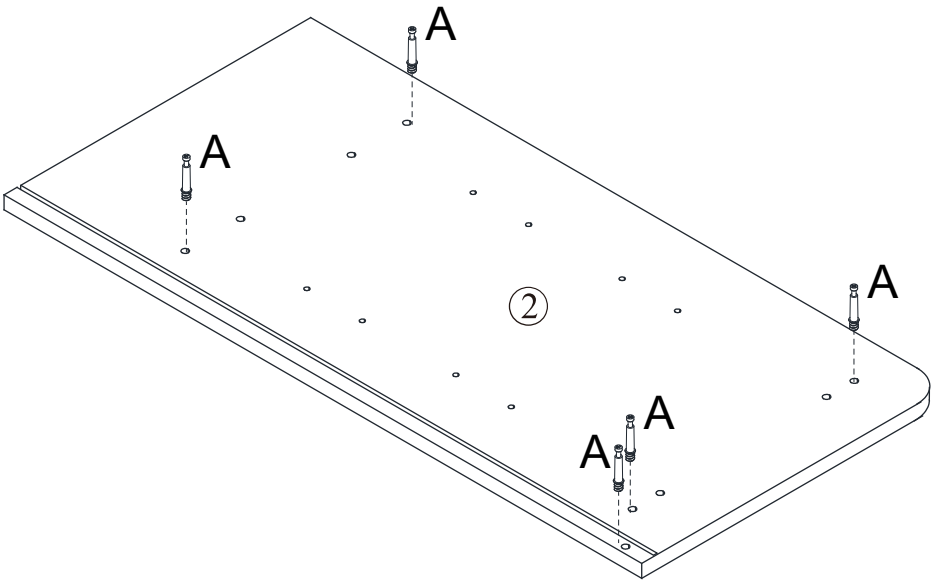

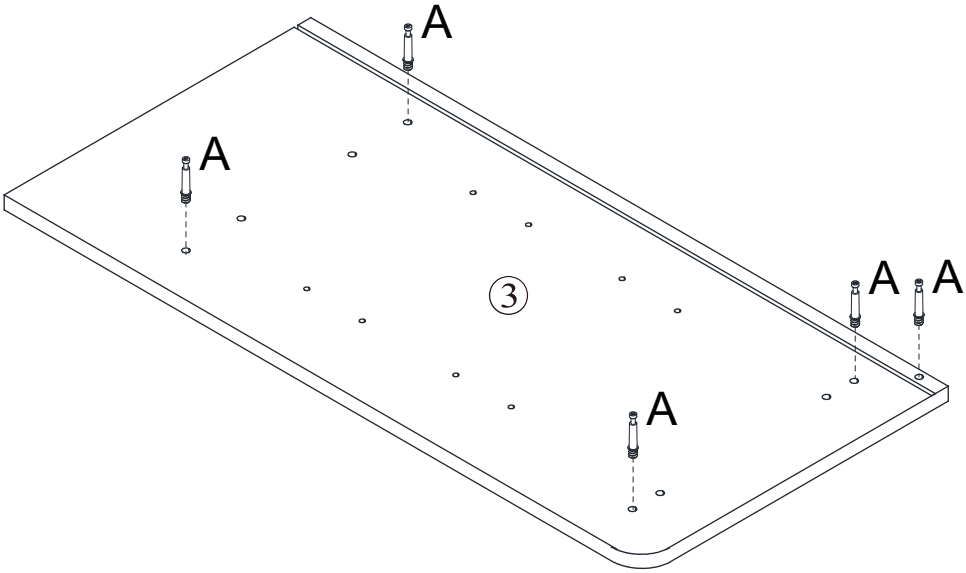

STEP 4

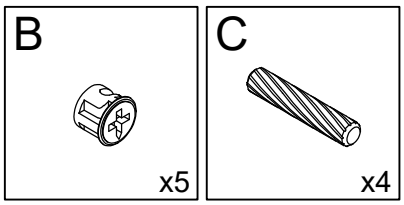

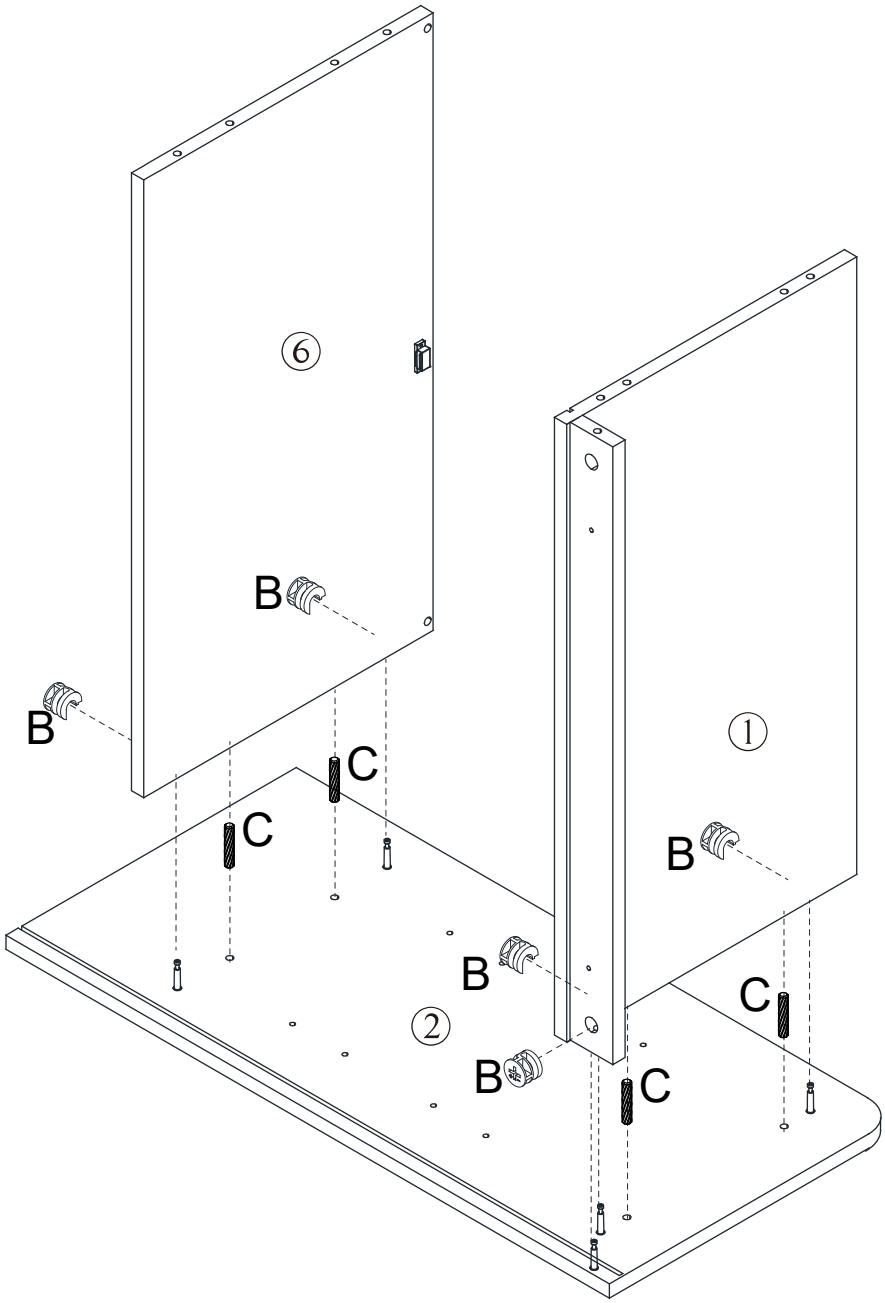

STEP 5

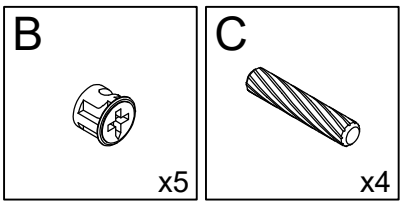

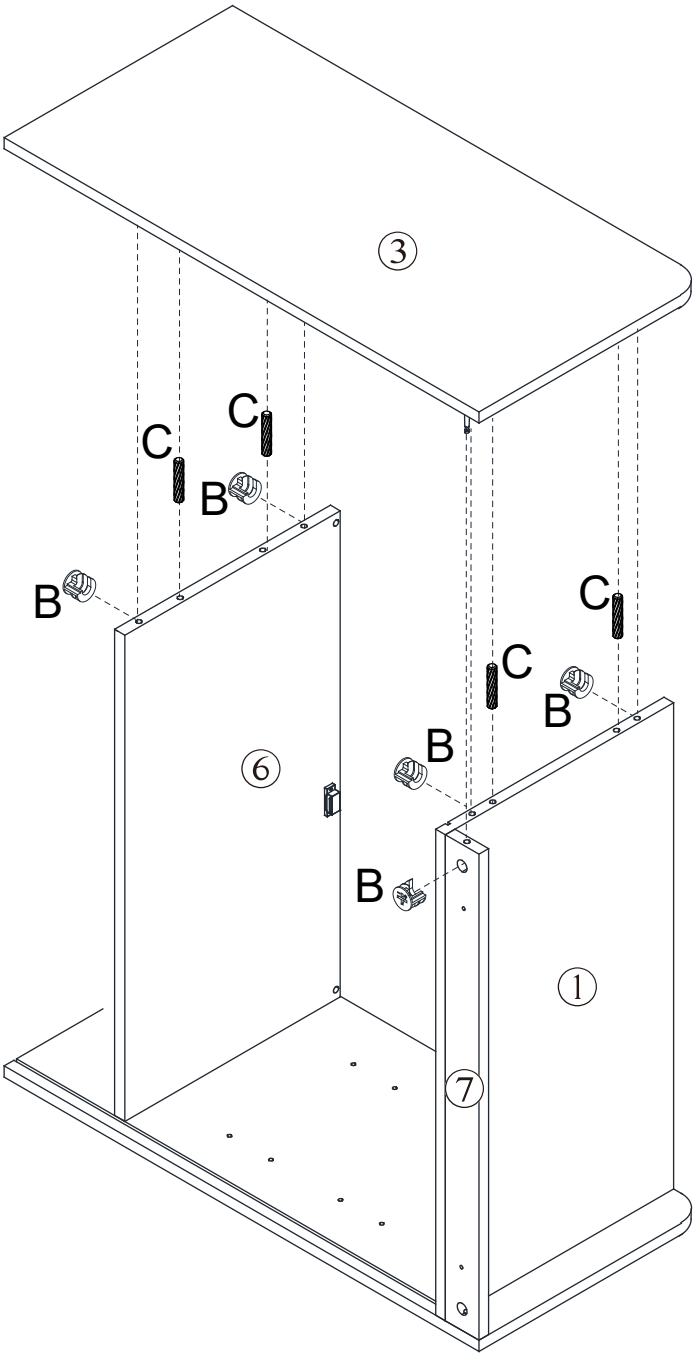

STEP 6

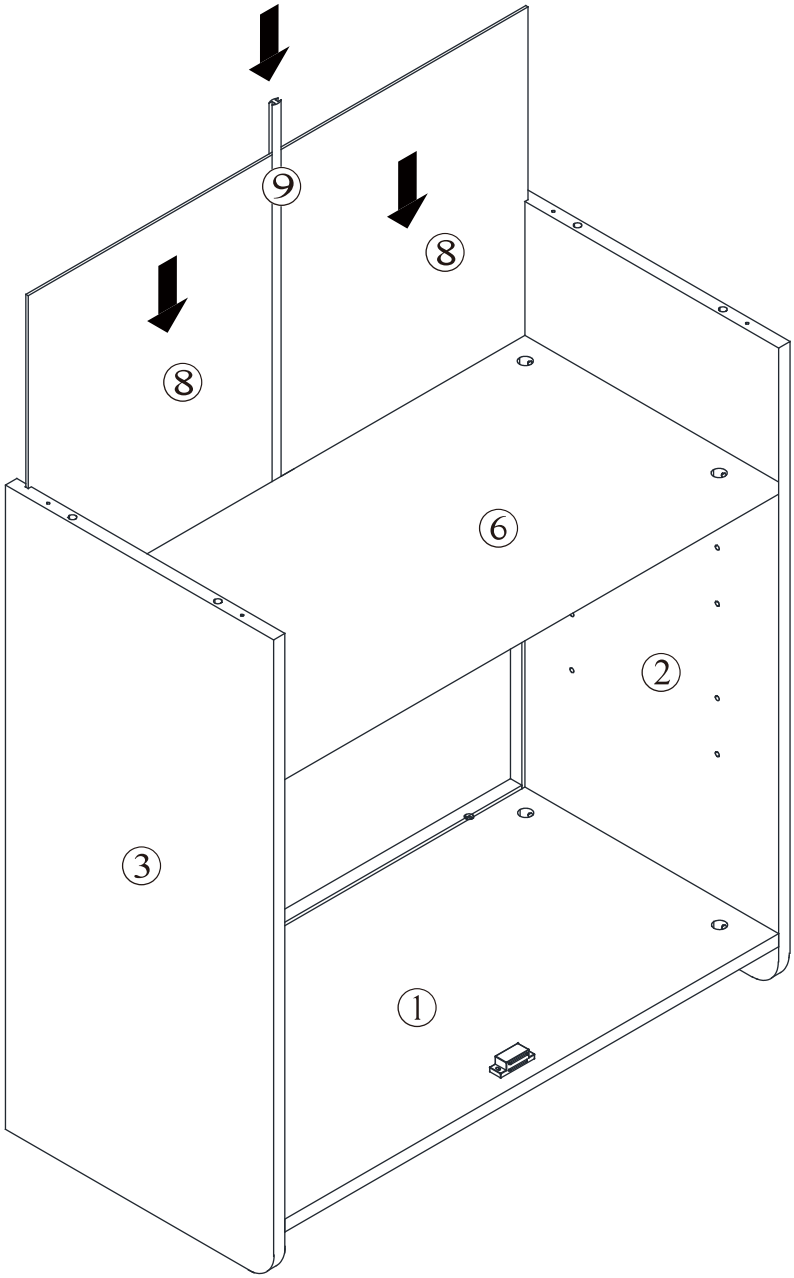

STEP 7

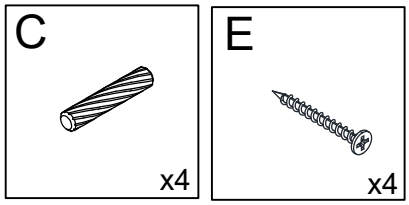

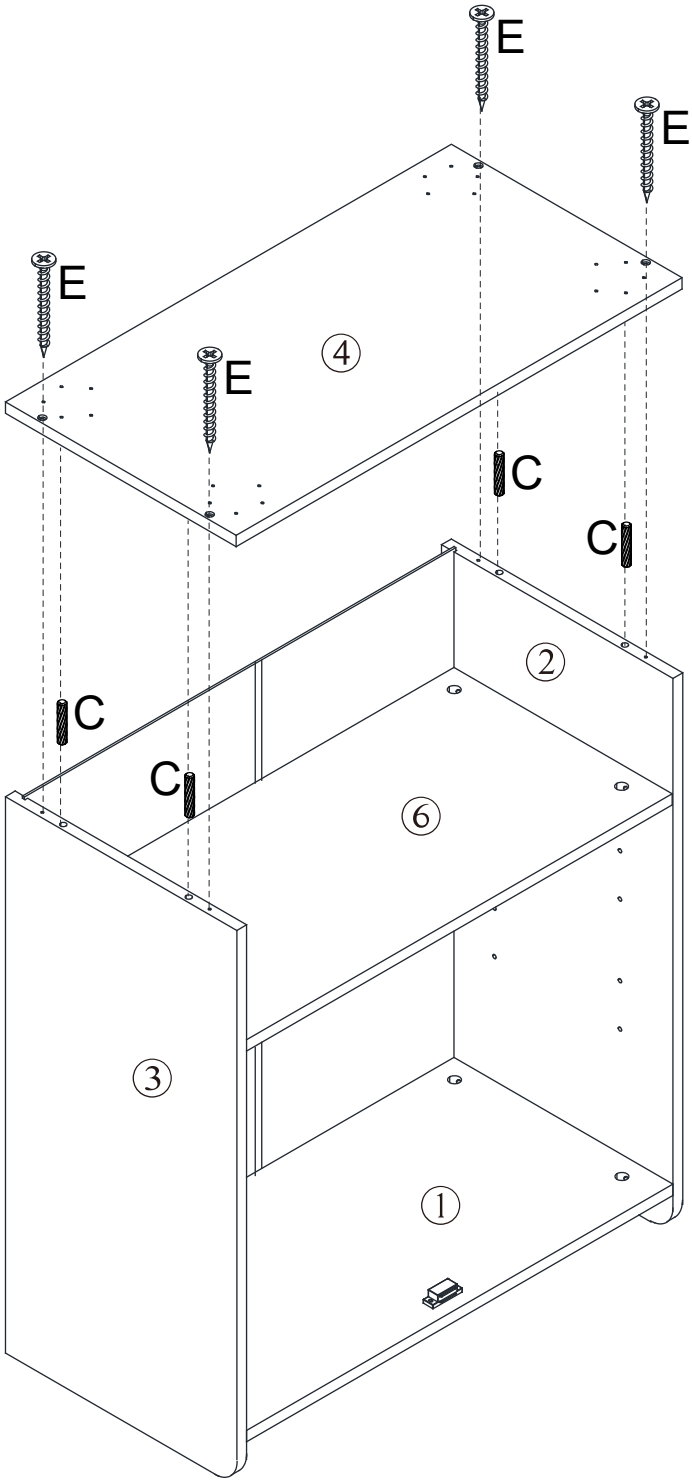

STEP 8

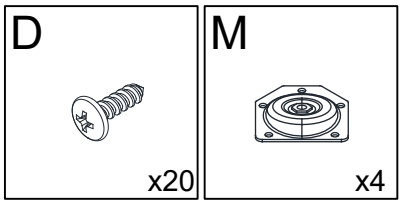

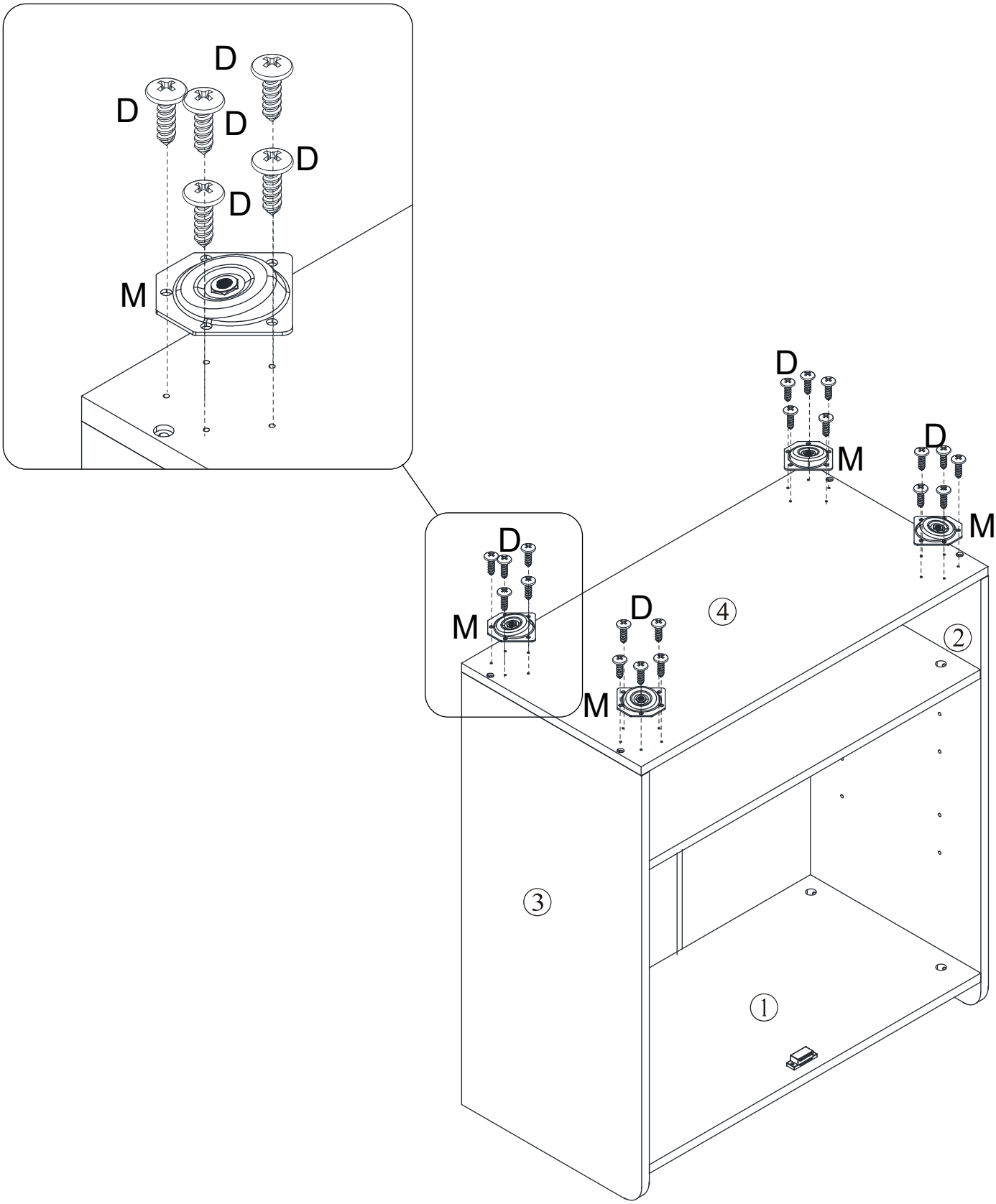

STEP 9

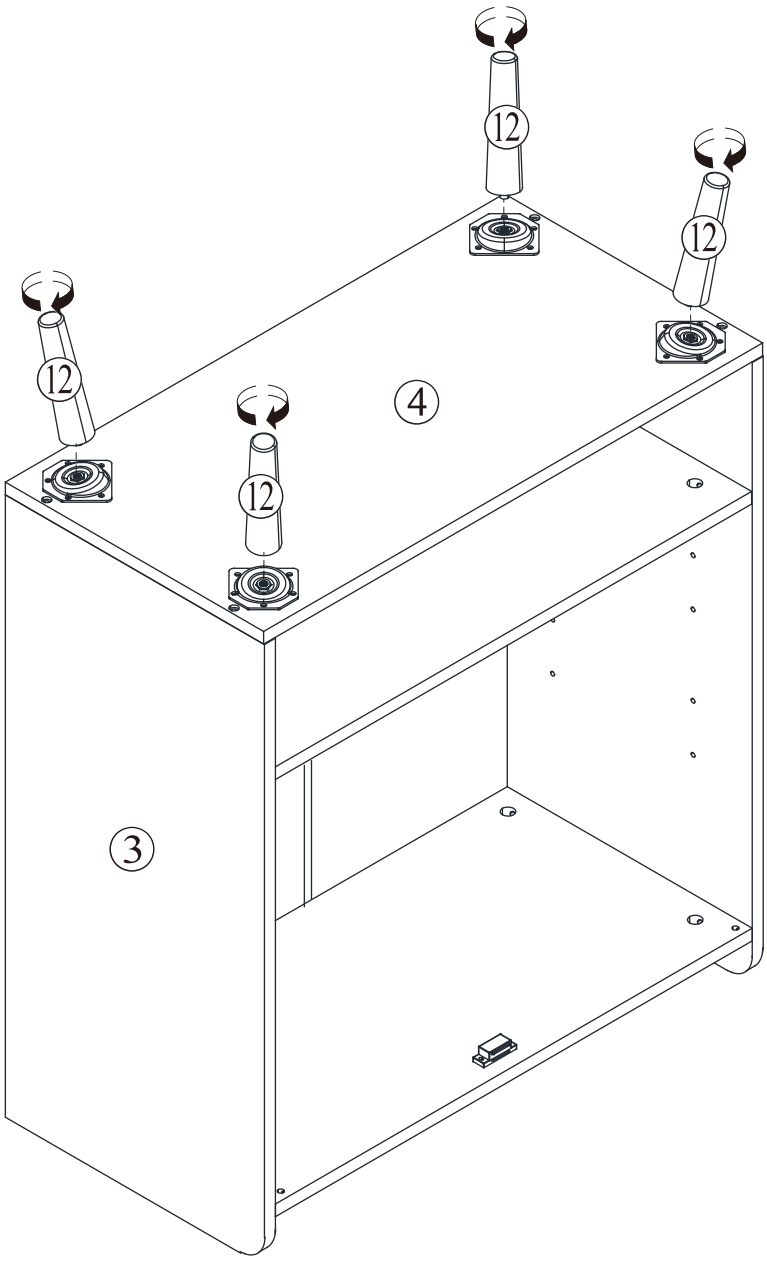

STEP 10

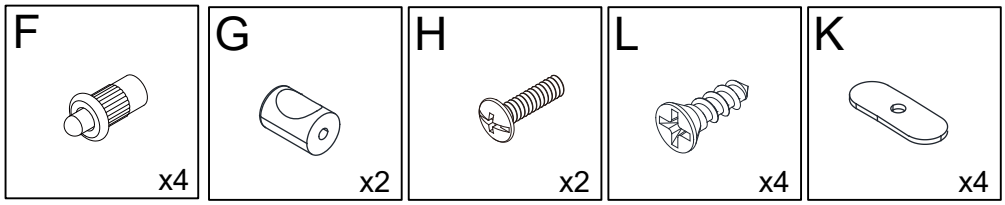

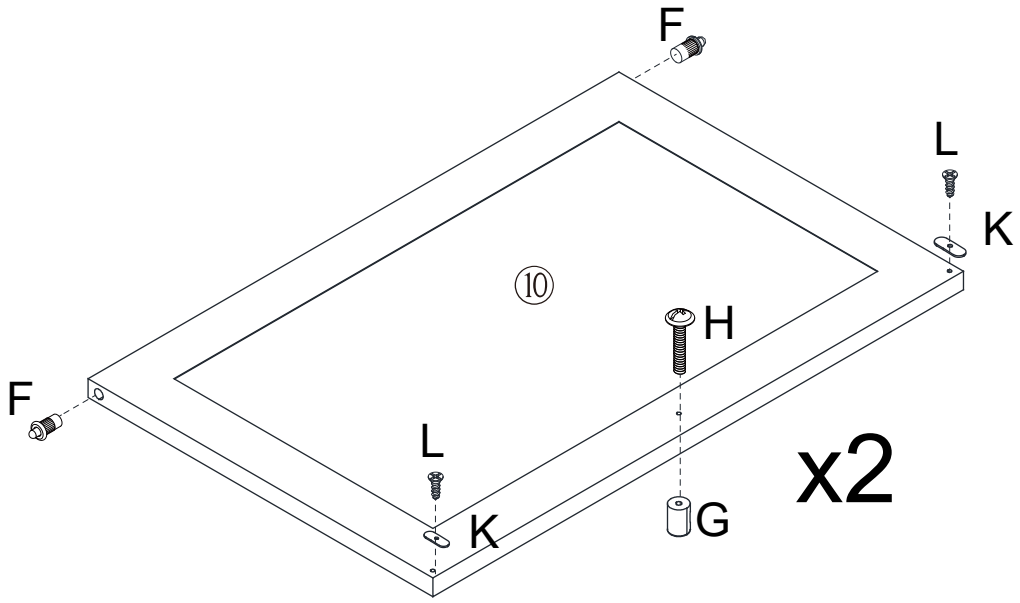

STEP 11

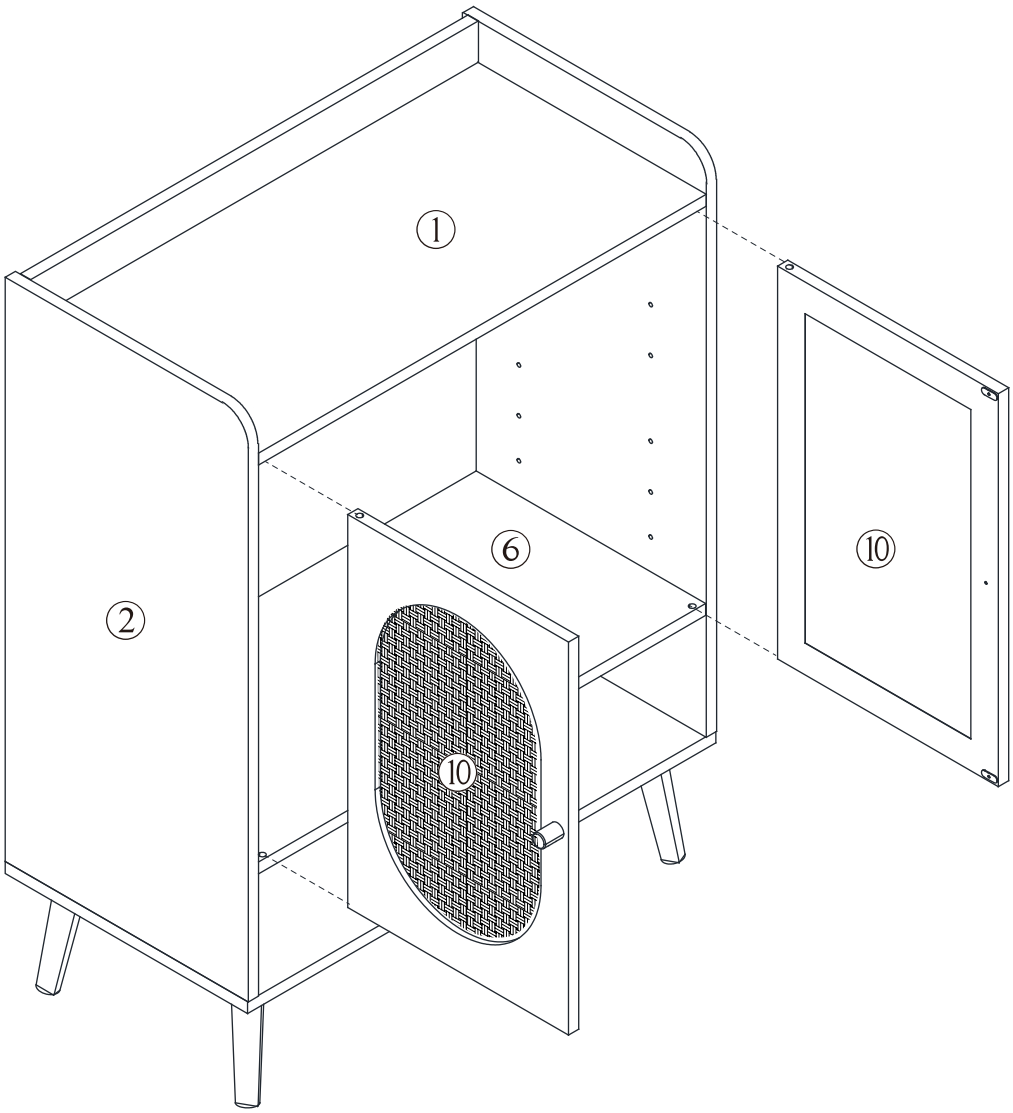

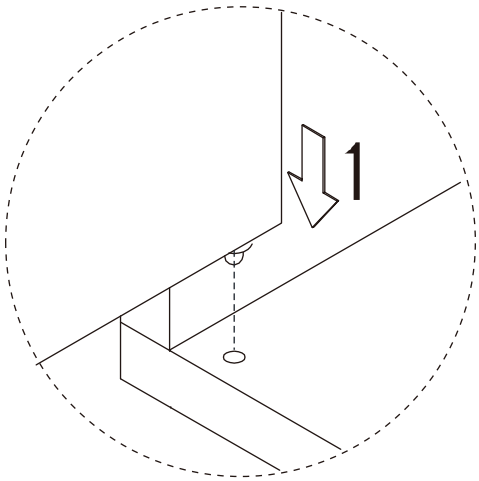

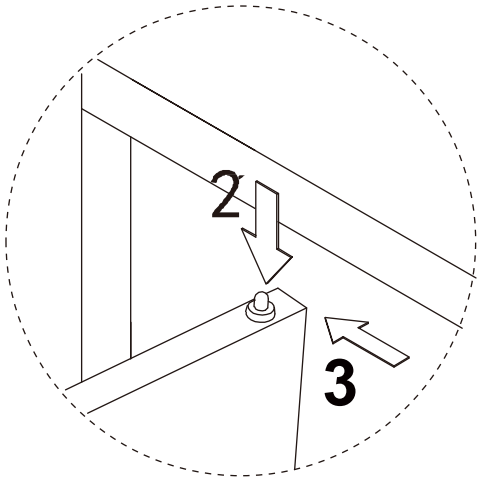

STEP 12

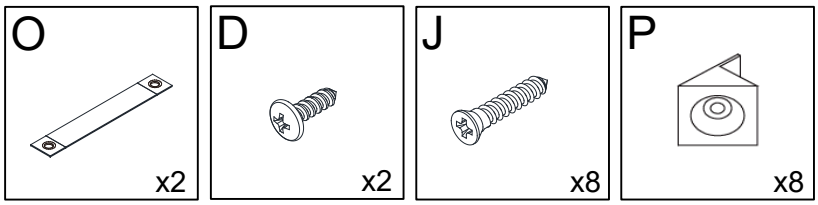

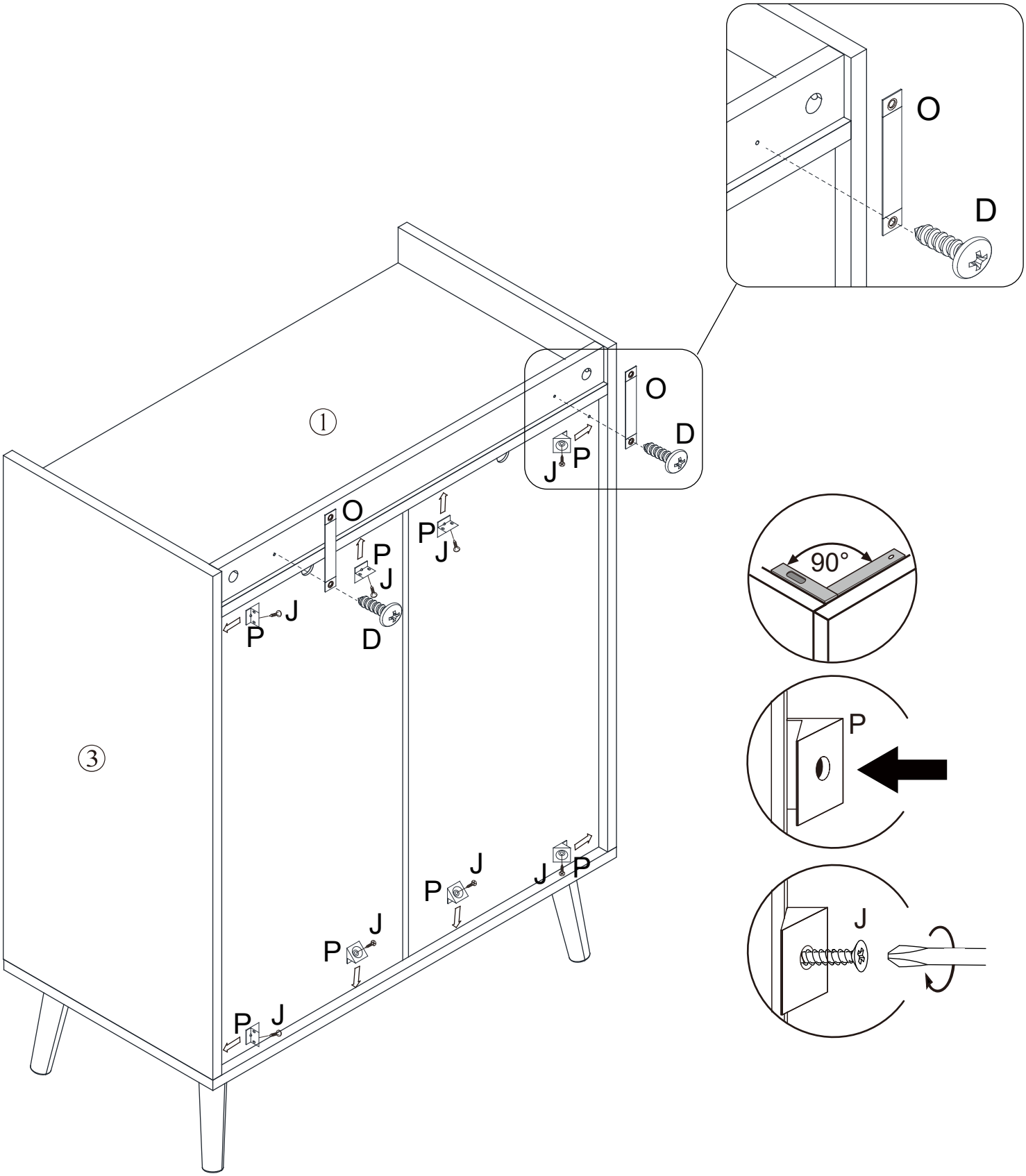

STEP 13

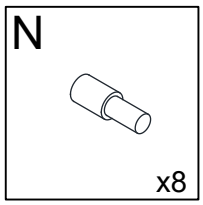

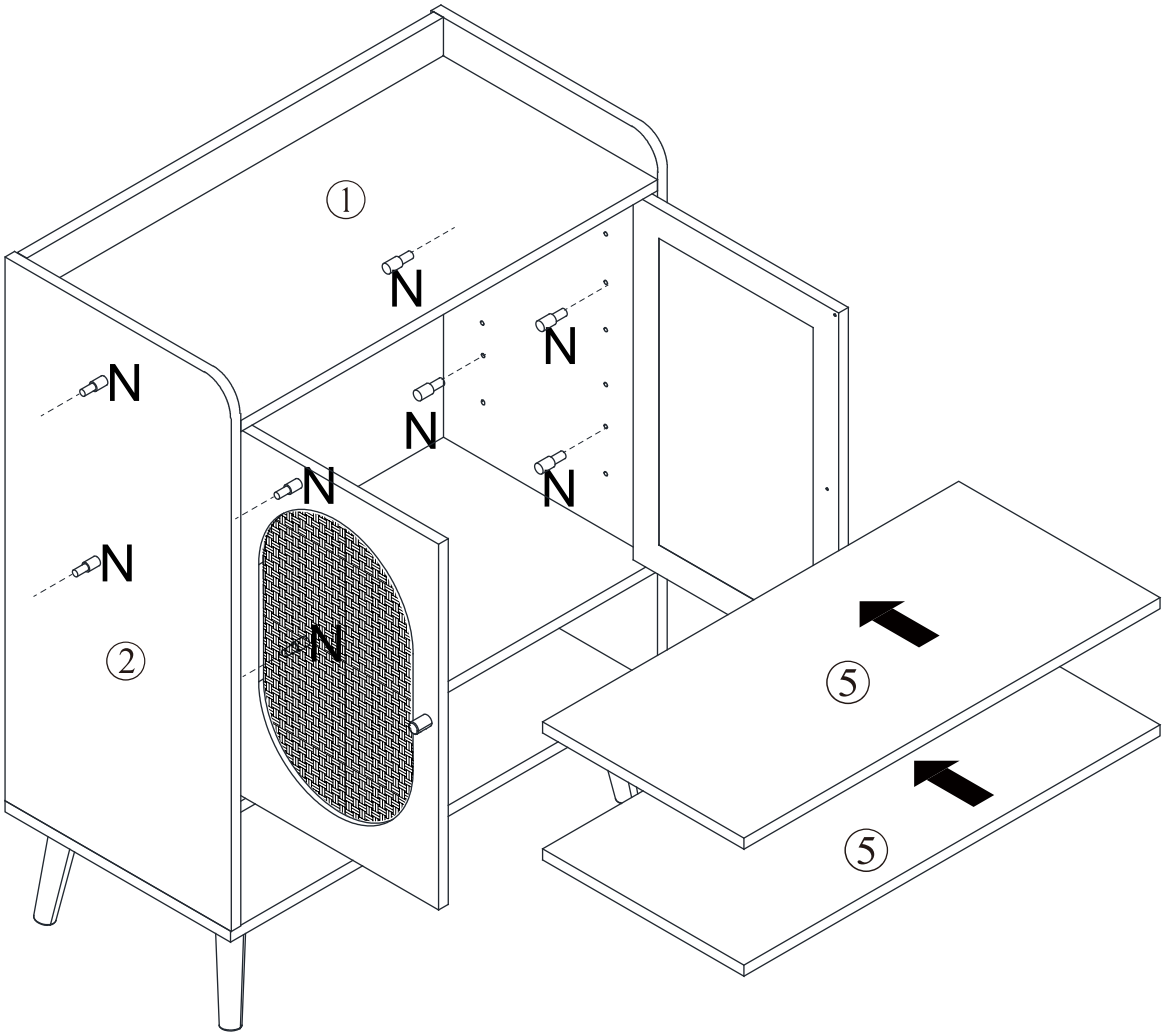

STEP 14

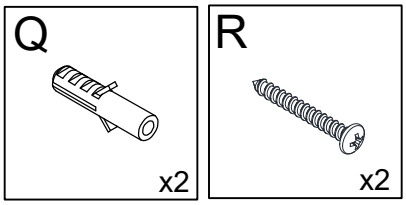

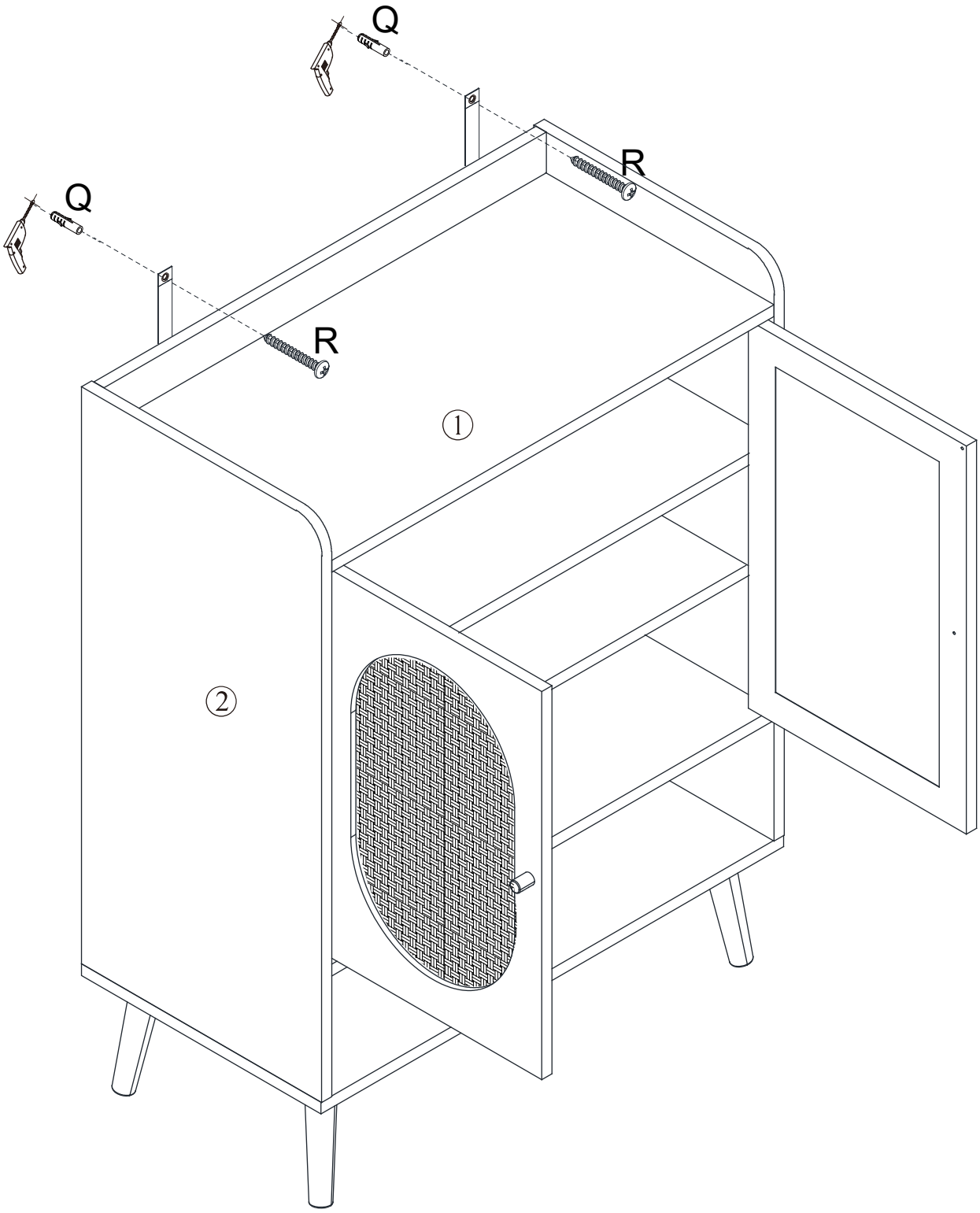

Proper Use

DO NOT	use for commercial purposes
DO NOT	use as a step stool or stand on table
DO NOT	put hot serving liquid directly on the table top
DO NOT	leave spilled liquid on the table top
DO NOT	use table if damaged
DO NOT	exceed weight limit
DO NOT	make temporary repairs
DO NOT	use outdoor

Dear Customer:

Thank you for purchasing our product, we wish you satisfy our service, if you have any further questions or any quality issues, please show the belows number and don't hesitate to contact our Customer Service People:

W688202406