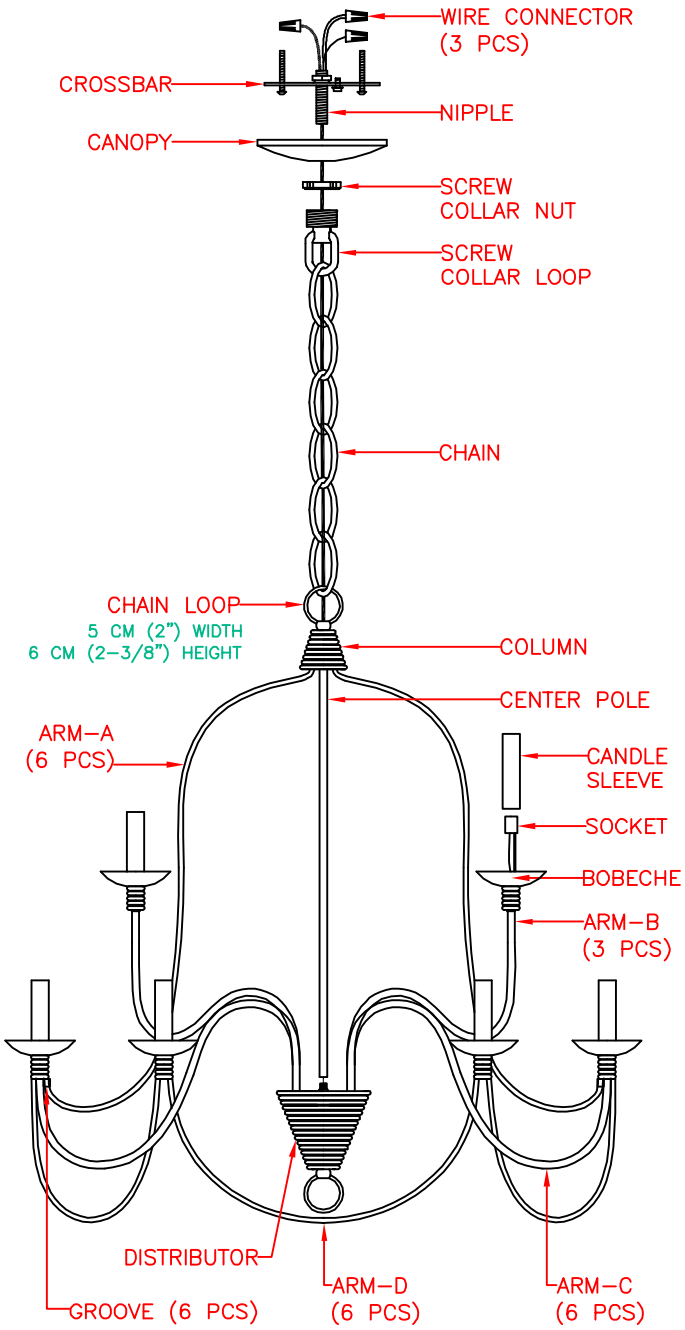

PRODUCT SPECIFICATIONS

☐ **OVERALL ASSEMBLED DIMENSIONS**
HEIGHT: 81.3 CM (32"), WIDTH: 81.3 CM (32") DIA.

☐ **6+3 LIGHTS:** UL LISTED. 60 WATT. CANDELABRA BASE E-12 PHENOLIC SOCKET. 2.2 CM (7/8") DIA. x 9.5 CM (3-3/4") LENGTH CANDLE SLEEVES ARE PROVIDED.

☐ **CANOPY:** PAINTED STEEL, 13 CM (5-1/8") DIA. x 2.1 CM (3/4") HEIGHT. SHAPED AS SHOWN.

☐ **WIRE:** UL LISTED, MIN. 305 CM (10 FT.) LENGTH, 18 AWG., 2 CONDUCTORS, 105°C, BLACK COLOR. WIRES MUST BE LEAD FREE.

☐ **CHAIN:** PAINTED STEEL, 3.8 MM THICKNESS, 183 CM (6 FT.) MIN. LENGTH.

☐ **COLUMN:** PAINTED RESIN, 6 CM (2-3/8") DIA. MAX. x 5 CM (2") HEIGHT, SHAPED AS SHOWN.

☐ **DISTRIBUTOR:** PAINTED RESIN, 12 CM (4-3/4") DIA. MAX. x 10 CM (3-7/8") HEIGHT. SHAPED AS SHOWN.

☐ **CENTER POLE:** PAINTED STEEL, 1.2 CM (1/2") DIA. TUBING, 51.6 CM (20-5/16") LENGTH.

☐ **ARMS:** PAINTED STEEL, ARM-A: 6 MM (1/4") DIA. ROD, 34.5 CM (13-9/16") WIDTH x 57.6 CM (22-11/16") HEIGHT, ARM-B: 9 MM (3/8") DIA. TUBING, 21.6 CM (8-1/2") WIDTH x 28.4 CM (11-3/16") HEIGHT, ARM-C: 9 MM (3/8") DIA. TUBING, 33.8 CM (13-5/16") WIDTH x 21.5 CM (8-1/2") HEIGHT, ARM-D: 6 MM (1/4") DIA. ROD, 39.8 CM (15-11/16") WIDTH x 18.4 CM (7-1/4")
☐ HEIGHT. SHAPED AS SHOWN.

BOBECHE: PAINTED STEEL, 8.9 CM (3-1/2") DIA. x 1.9 CM (3/4")
☐ HEIGHT.

☐ **LABELS:** UL, CSA OR CUL, MANUFACTURING DATE, MODEL # AND COUNTRY OF ORIGIN LABELS PROVIDED IN CANOPY. RELAMPING LABEL FOR 60 WATT TYPE "B" BULB PROVIDED ON CANDLE SLEEVE.

PACKAGING AND SHIPPING DETAILS

☐ THE FIXTURE IS DISASSEMBLED FOR SHIPPING. EACH PART IS WRAPPED IN A PLASTIC BAG WITH A SMALL BAG OF SILICA AND PACKED IN ITS OWN CARDBOARD CARTON.

☐ HARDWARE PACK #001 IS PROVIDED. ALL PARTS SHOULD BE SECURED SO THEY CAN NOT MOVE DURING SHIPPING.

☐ THE CARTON IS MADE OF DOUBLE WALL, CORRUGATED CARDBOARD "A MA A". BROWN IN COLOR. THE INNER PACKING IS DIE-CUT CARDBOARD OR STYROFOAM TO PROTECT AND SECURE THE FIXTURE AND MUST PASS THE FEDEX AND ISTA-3A DROP TEST REQUIREMENTS.

☐ EACH CARTON SHALL BE PRINTED WITH A LINE DRAWING AND THE NAME AND LOGO, MODEL NUMBER AND FINISH, EACH CARTON SHALL BE PROVIDED A UPC LABEL.

OTHER DETAILS

☐ ALL VISIBLE PARTS MUST MATCH IN FINISH UNLESS OTHERWISE SPECIFIED.

☐ INSTALLATION INSTRUCTIONS ARE TO BE PACKED WITH FIXTURE, AND BE PRINTED CLEARLY ON QUALITY PAPER.

☐ ALL BAGS MUST BE LABELED WITH OFFICIAL "THIS BAG IS NOT A TOY" STATEMENT.

☐ ASSEMBLY TIME: 15 MINUTES.

☐ THE UL NUMBER IS E344897.

☐ DIMS OF BOX: 94 CM (37") LENGTH x 94 CM (37") WIDTH x 56 CM (22") HEIGHT. (CUFT.: 17.4')

☐ NET WEIGHT: 13.83 LBS. GROSS WEIGHT: 24.77 LBS.