Assembly Instructions

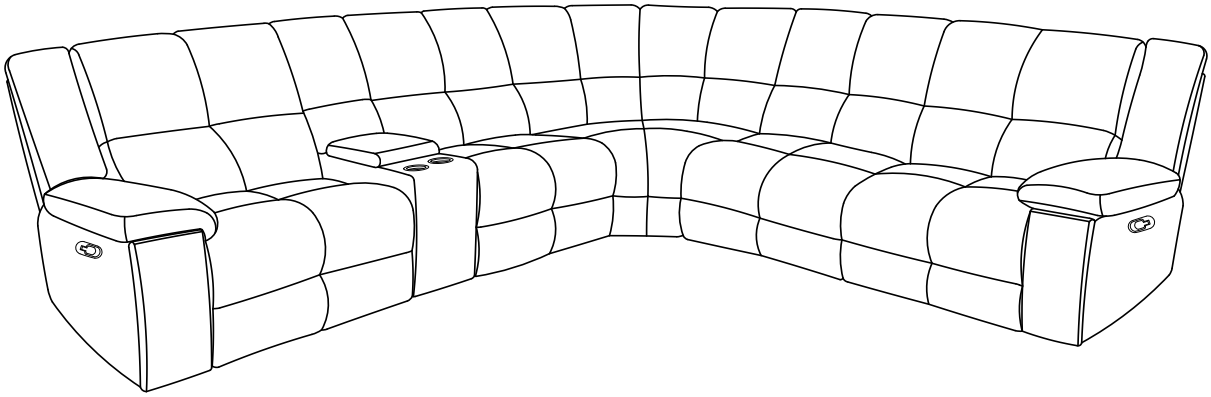

BEFORE ASSEMBLY

Thank you for purchasing this quality product. This product has been designed for easy assembly and constructed for durability. Please take the time to read and follow the assembly instructions carefully.

Manual LAF Recliner

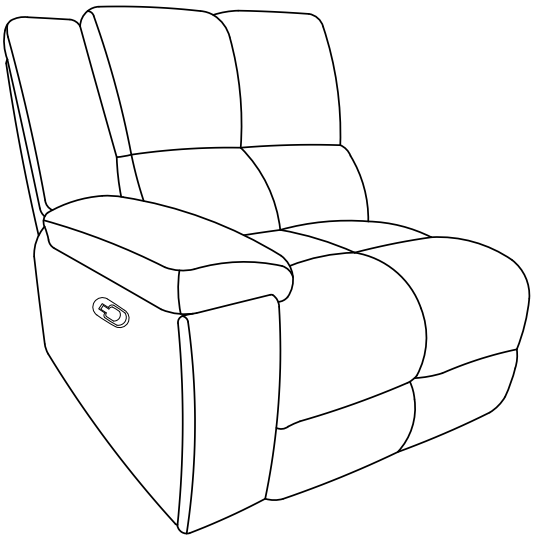

Part List

When unpacking, please be careful not to discard any parts with the packaging. Before continuing, please make sure you have the following parts:

No	Description	Sketch	Qty
A	LAF Body	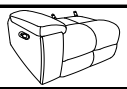	1 PC
B	LAF Back Cushion		1 PC
C	LAF Wing		1 PC

Step 1

Take out the LAF wing (C) from the back of the Body (A).

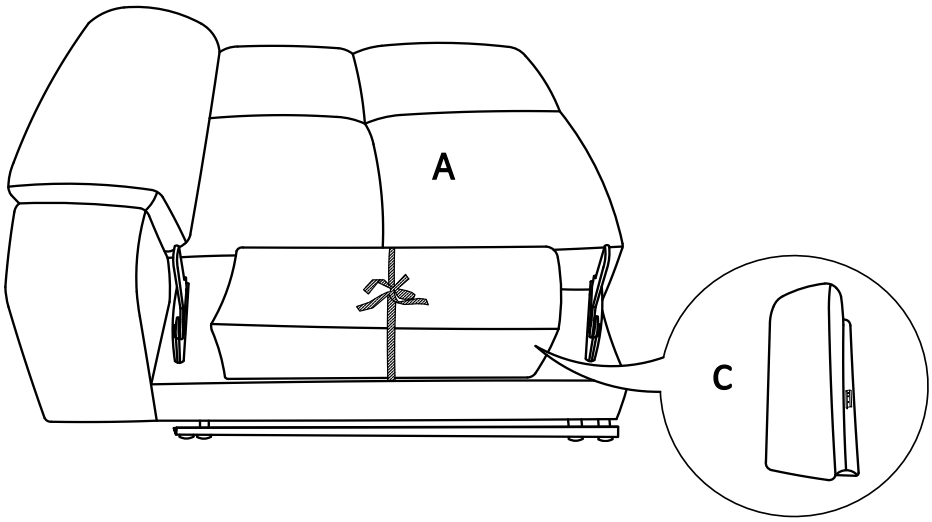

Step 2

Install the Back Cushion (B) onto the Body (A) by aligning the female metal receiver brackets with the male metal posts. Ensure that the female metal receiver brackets on both sides are properly aligned with the metal posts on the Body. Push the Back Cushion downward until both sides lock securely into place and an audible "click" is heard.

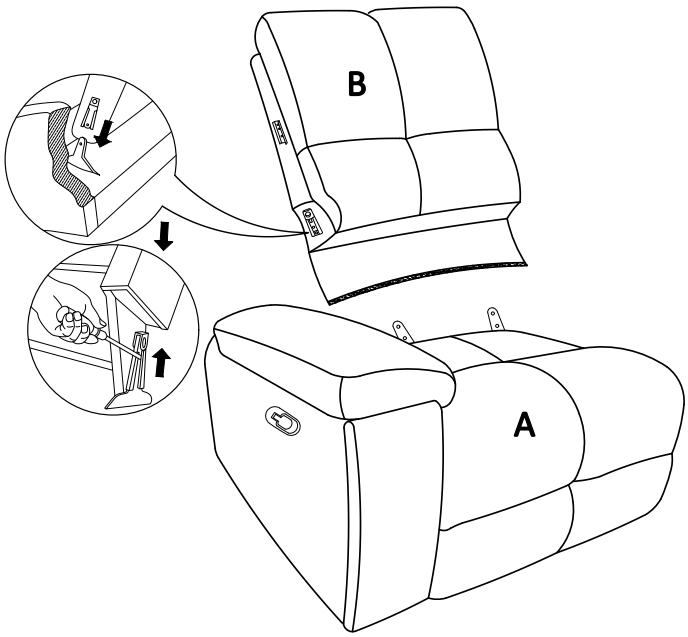

Step 3

Install the LAF Wing (C) by sliding wings in a downward motion along the side of the seat back to connect the brackets.

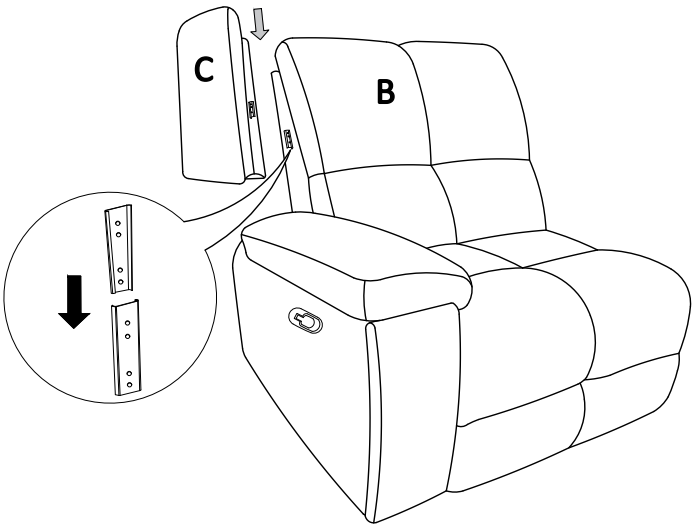

Assembly Instructions

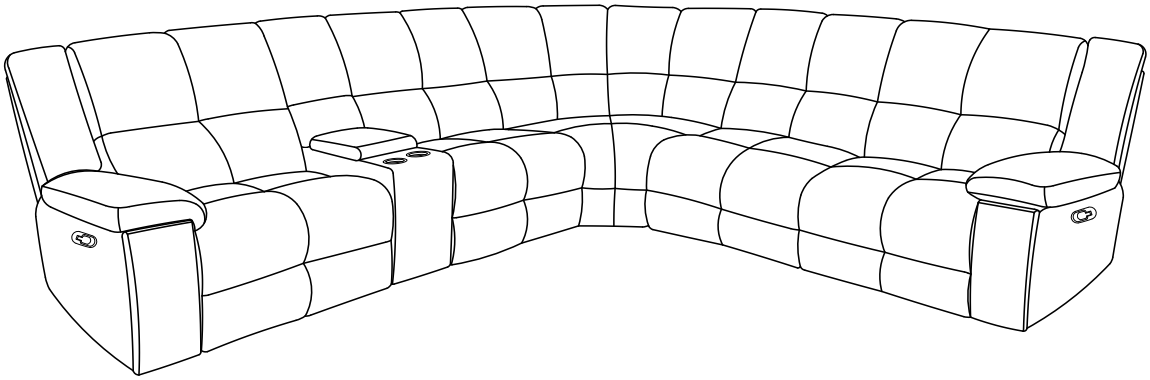

BEFORE ASSEMBLY

Thank you for purchasing this quality product. This product has been designed for easy assembly and constructed for durability. Please take the time to read and follow the assembly instructions carefully.

Manual RAF Recliner

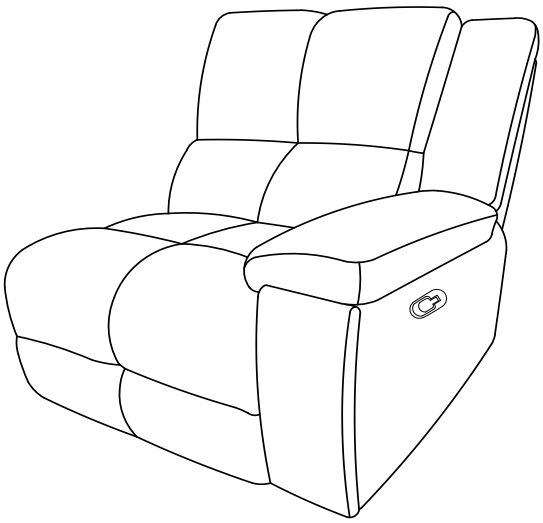

Part List

When unpacking, please be careful not to discard any parts with the packaging. Before continuing, please make sure you have the following parts:

No	Description	Sketch	Qty
A	RAF Body	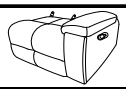	1 PC
B	RAF Back Cushion		1 PC
C	RAF Wing		1 PC

Step 1

Take out the RAF wing (C) from the back of the Body (A).

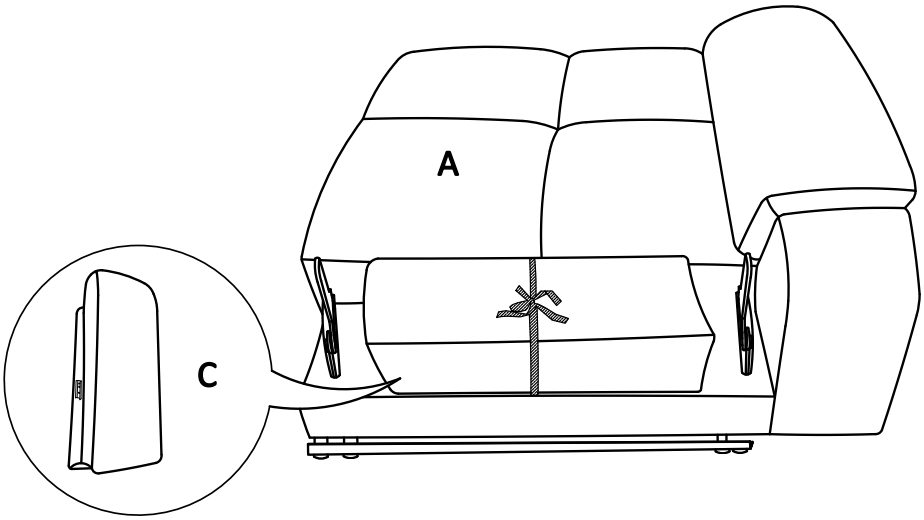

Step 2

Install the Back Cushion (B) onto the Body (A) by aligning the female metal receiver brackets with the male metal posts. Ensure that the female metal receiver brackets on both sides are properly aligned with the metal posts on the Body. Push the Back Cushion downward until both sides lock securely into place and an audible "click" is heard.

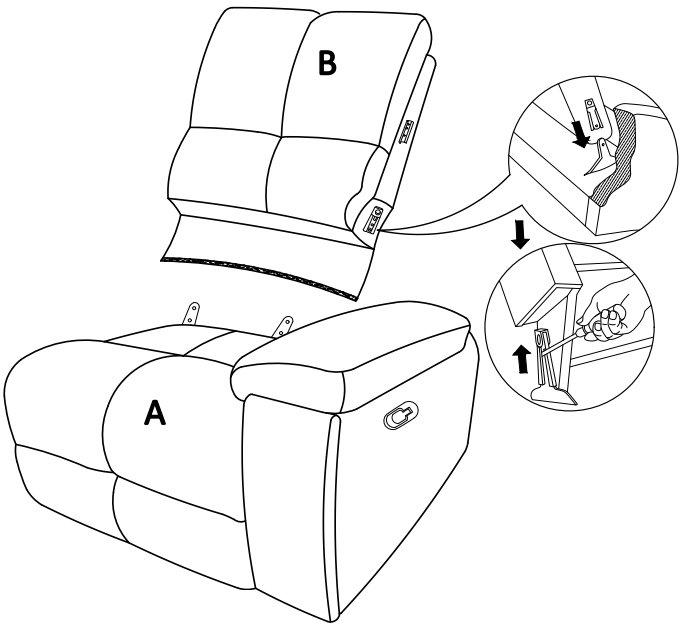

Step 3

Install the LAF Wing (C) by sliding wings in a downward motion along the side of the seat back to connect the brackets.

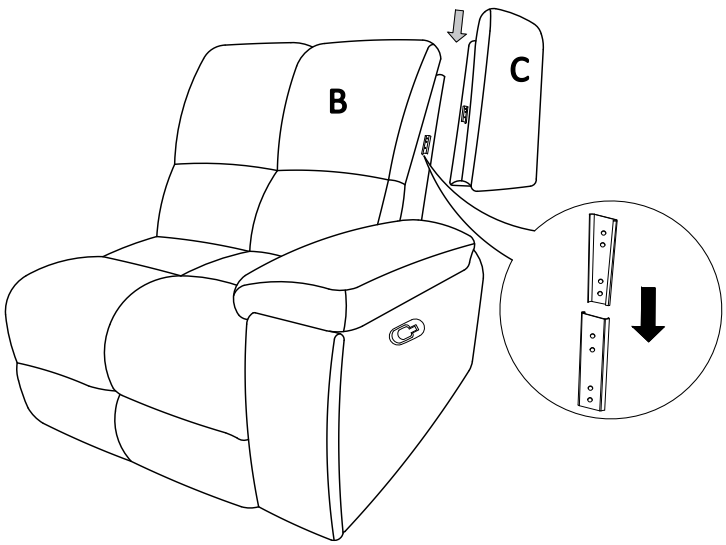

Assembly Instructions

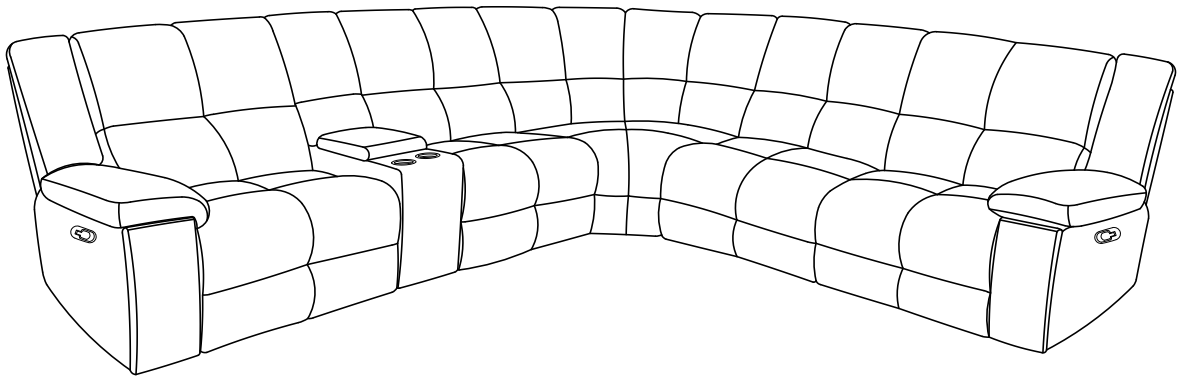

BEFORE ASSEMBLY

Thank you for purchasing this quality product. This product has been designed for easy assembly and constructed for durability. Please take the time to read and follow the assembly instructions carefully.

Manual Armless Recliner

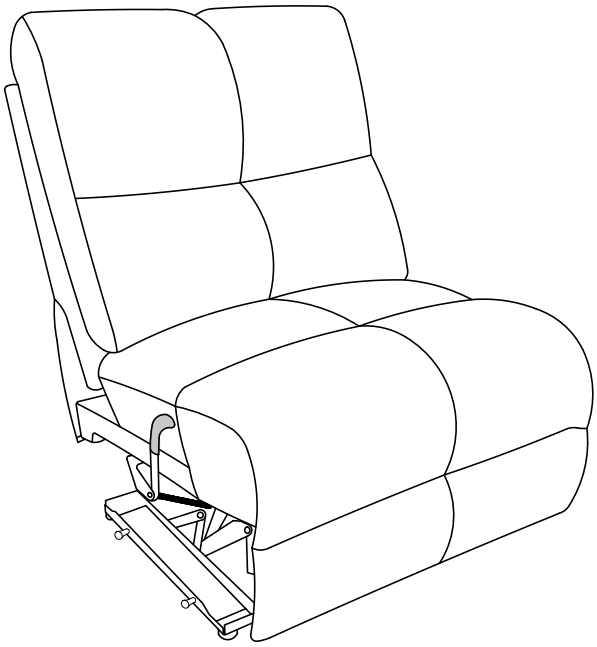

Part List

When unpacking, please be careful not to discard any parts with the packaging. Before continuing, please make sure you have the following parts:

No	Description	Sketch	Qty
A	Body	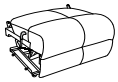	1 PC
B	Back Cushion		1 PC

Step 1

Install the Back Cushion (B) onto the Body (A) by aligning the female metal receiver brackets with the male metal posts. Ensure that the female metal receiver brackets on both sides are properly aligned with the metal posts on the Body. Push the Back Cushion downward until both sides lock securely into place and an audible "click" is heard.

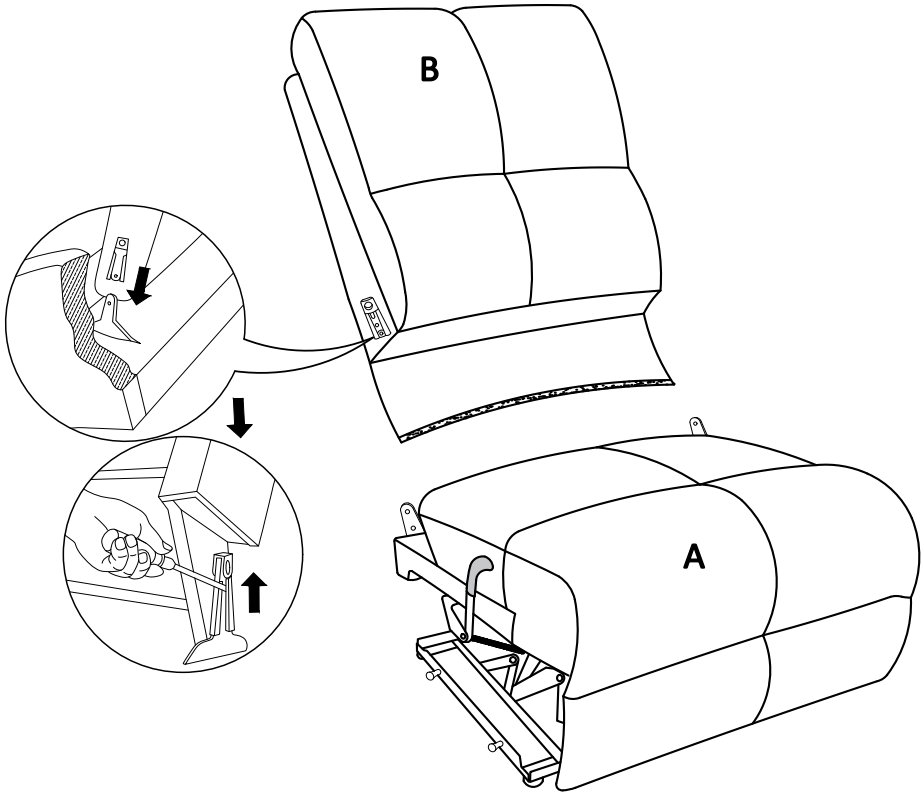

Step 2

After assembly is complete, gently pull the handle backward to extend the footrest and activate the reclining mechanism.

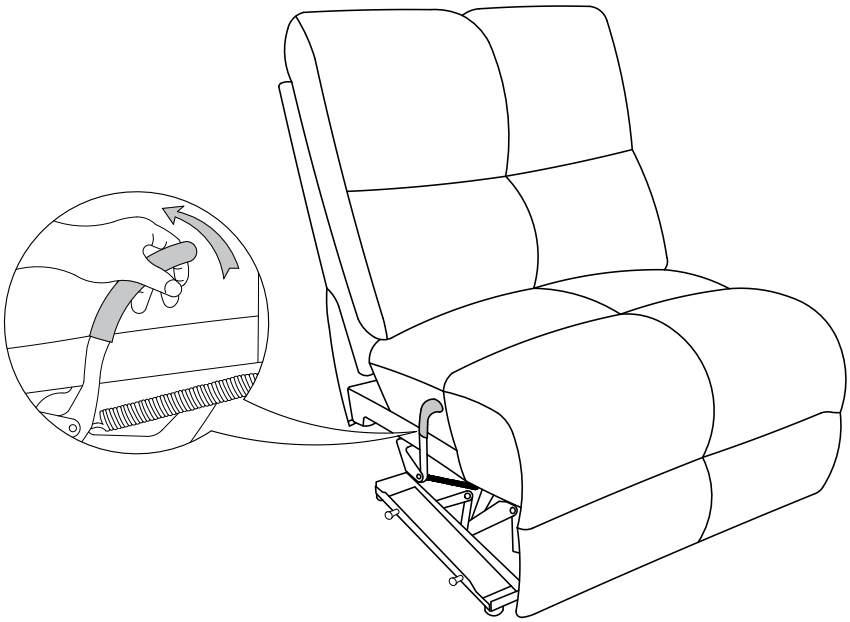

Assembly Instructions

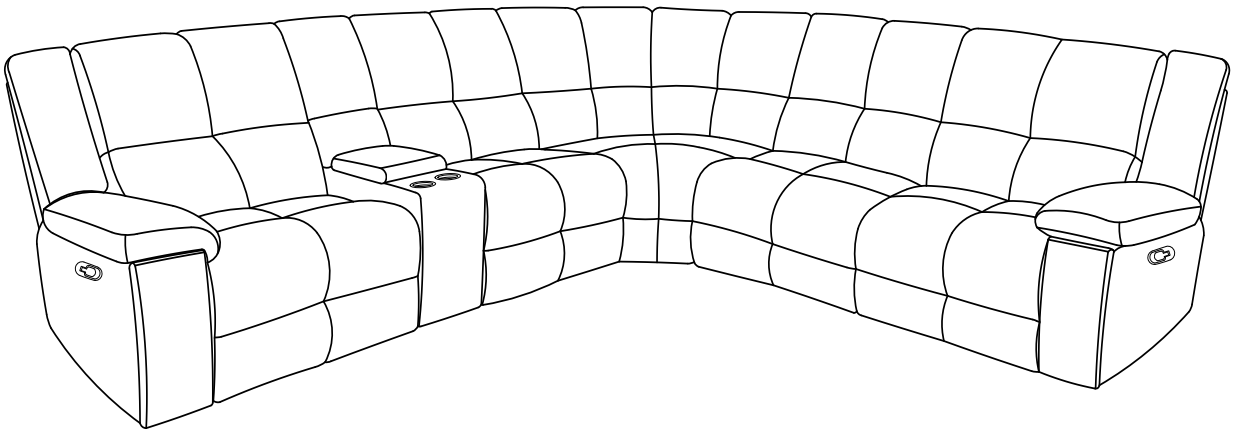

BEFORE ASSEMBLY

Thank you for purchasing this quality product. This product has been designed for easy assembly and constructed for durability. Please take the time to read and follow the assembly instructions carefully.

Armless Chair

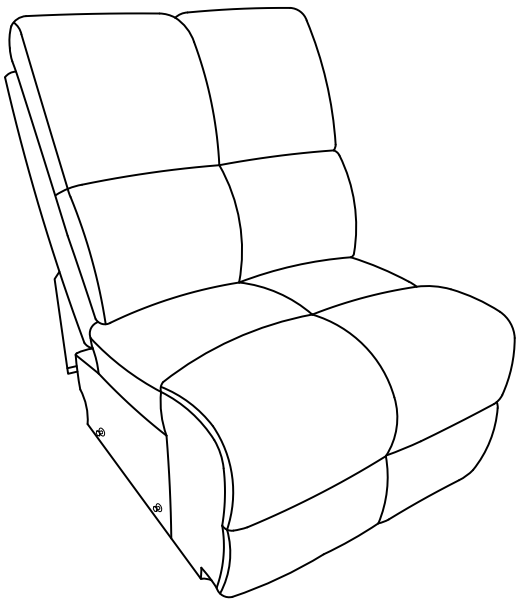

Part List

When unpacking, please be careful not to discard any parts with the packaging. Before continuing, please make sure you have the following parts:

No	Description	Sketch	Qty
A	Body	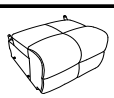	1 PC
B	Back Cushion		1 PC

Step 1

Install the Back Cushion (B) onto the Body (A) by aligning the female metal receiver brackets with the male metal posts. Ensure that the female metal receiver brackets on both sides are properly aligned with the metal posts on the Body. Push the Back Cushion downward until both sides lock securely into place and an audible "click" is heard.

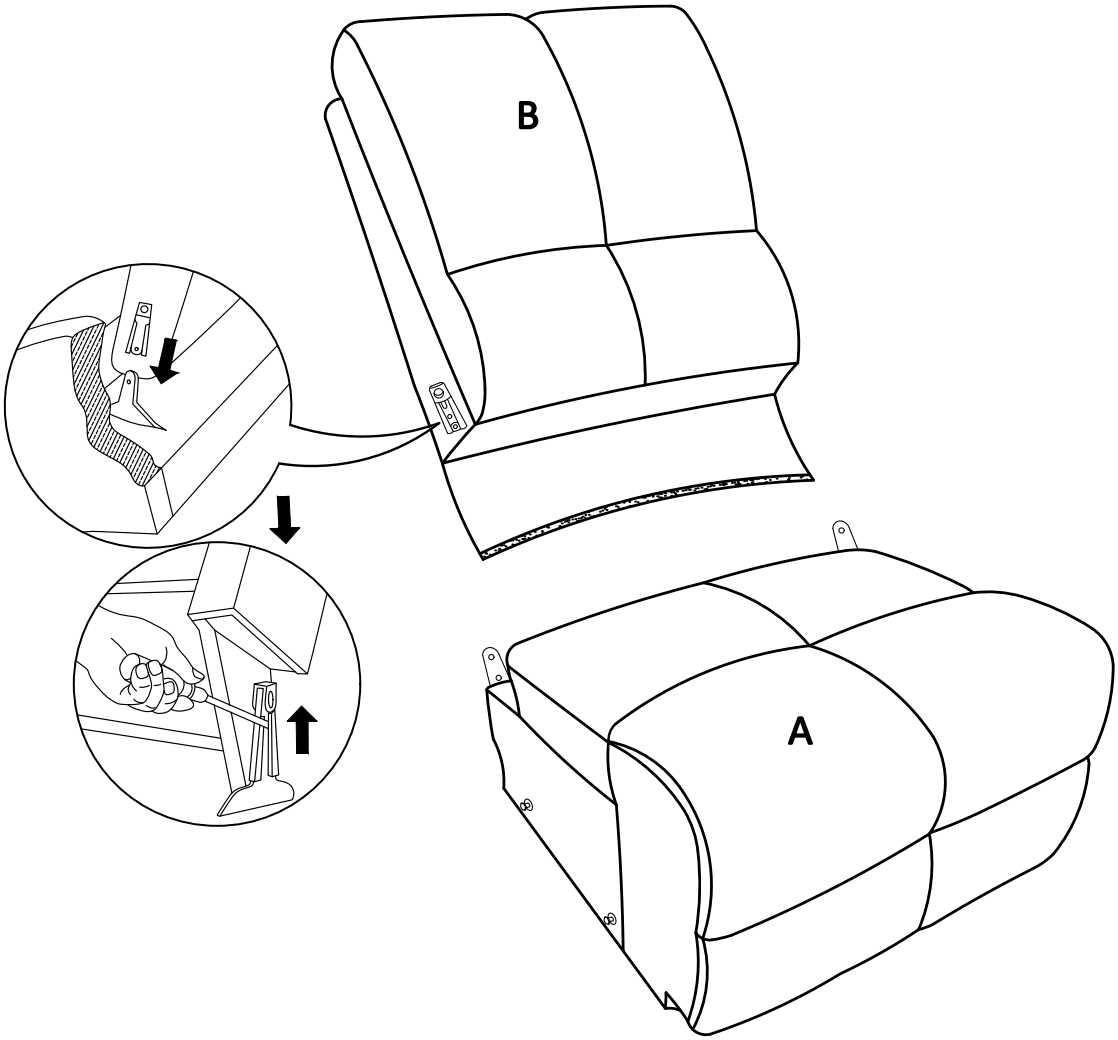

Assembly Instructions

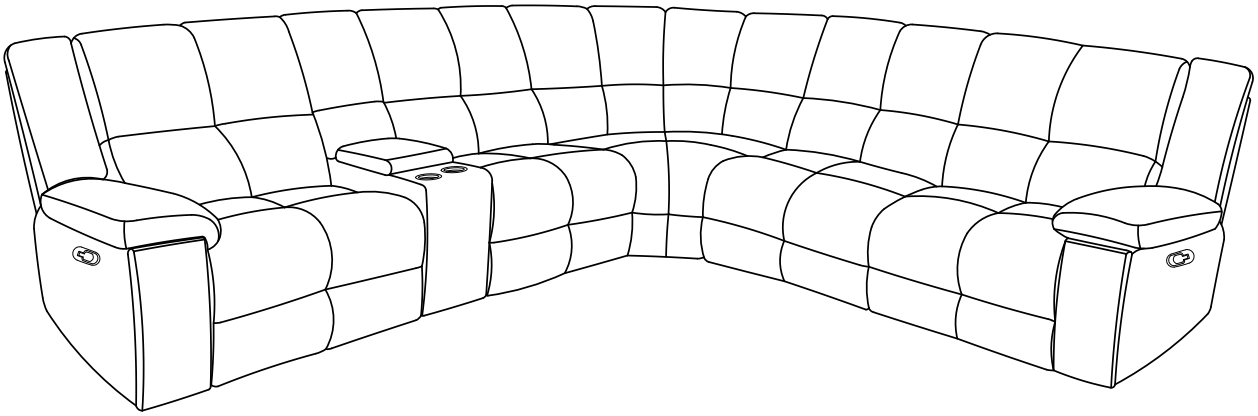

BEFORE ASSEMBLY

Thank you for purchasing this quality product. This product has been designed for easy assembly and constructed for durability. Please take the time to read and follow the assembly instructions carefully.

Corner Wedge

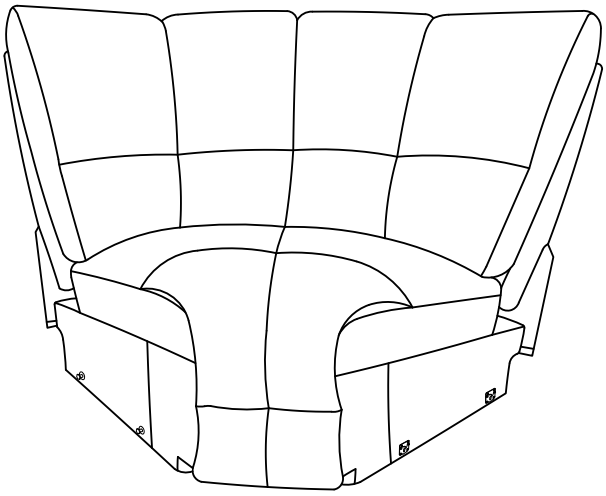

Part List

When unpacking, please be careful not to discard any parts with the packaging. Before continuing, please make sure you have the following parts:

No	Description	Sketch	Qty
A	Body	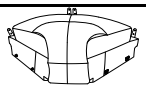	1 PC
B	LAF Back Cushion		1 PC
C	RAF Back Cushion		1 PC

Step 1

Install the Back Cushion (B/C) onto the Body (A) by aligning the female metal receiver brackets with the male metal posts. Ensure that the female metal receiver brackets on both sides are properly aligned with the metal posts on the Body. Push the Back Cushion downward until both sides lock securely into place and an audible "click" is heard.

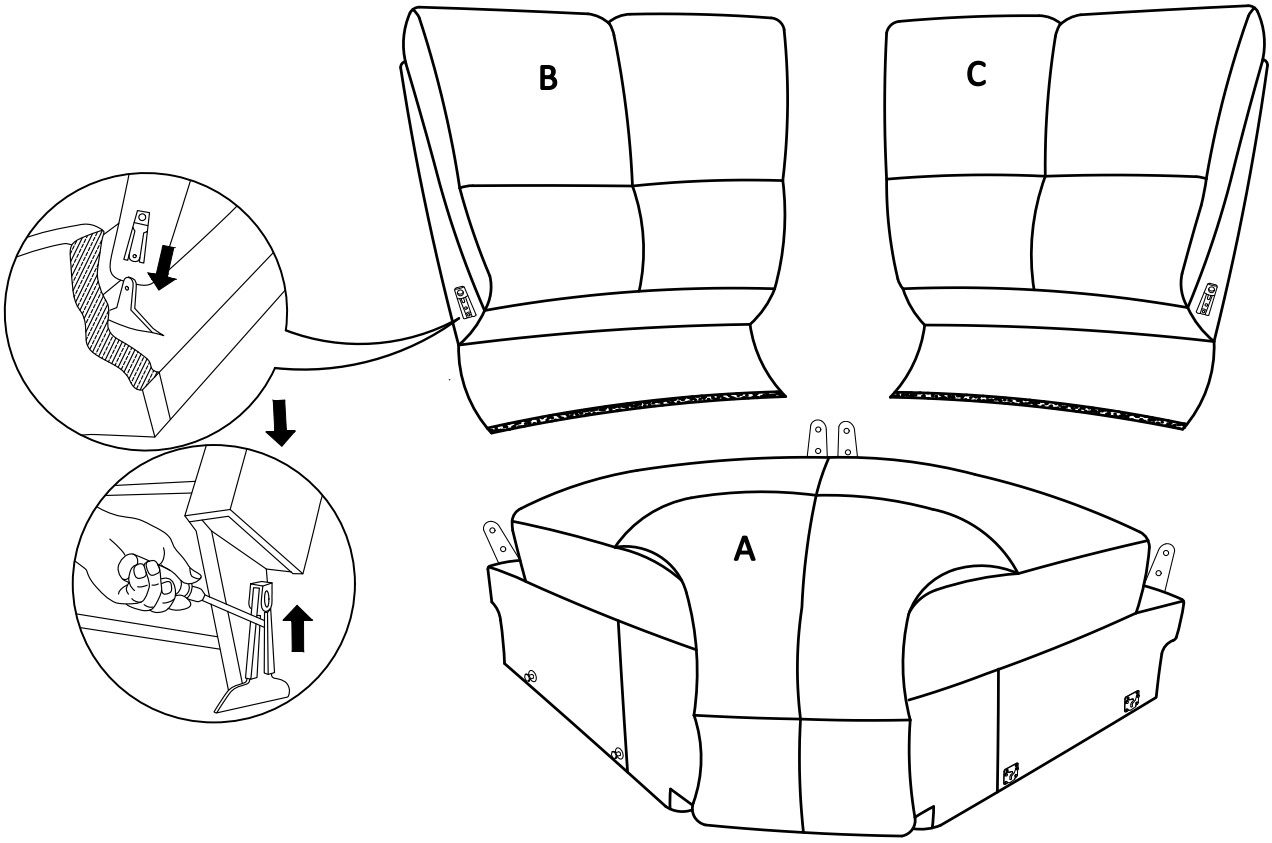

Assembly Instructions

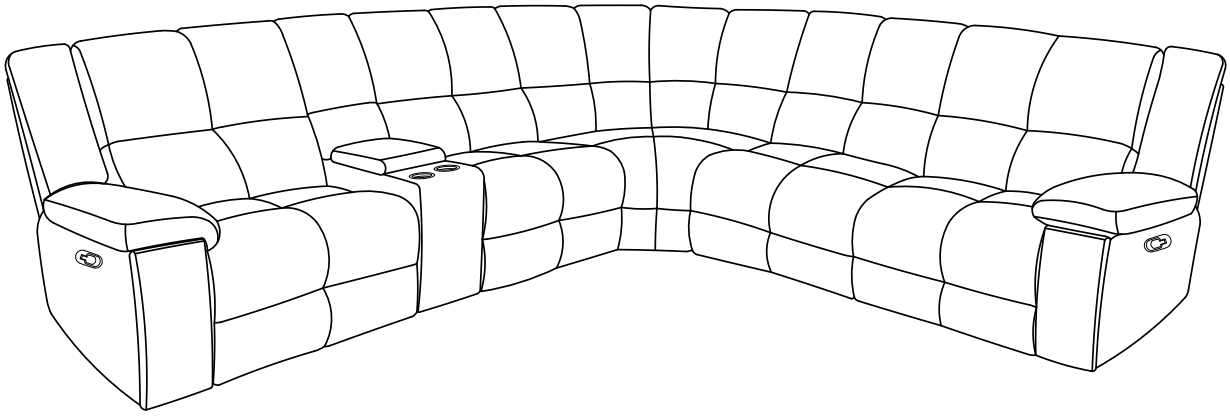

BEFORE ASSEMBLY

Thank you for purchasing this quality product. This product has been designed for easy assembly and constructed for durability. Please take the time to read and follow the assembly instructions carefully.

Entertainment Console

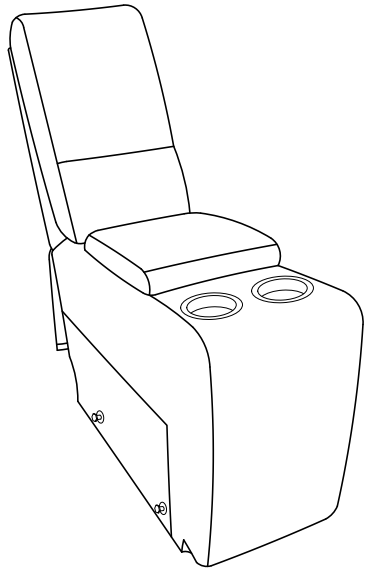

Part List

When unpacking, please be careful not to discard any parts with the packaging. Before continuing, please make sure you have the following parts:

No	Description	Sketch	Qty
A	Body	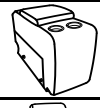	1 PC
B	Console Back Cushion		1 PC
C	Threaded Rod		2 PCS
D	Knob Nut		2 PCS

Step 1

1. Remove console back cushion (B) from the bottom of body (A).
2. Unscrew the knob nut (D) from the console back cushion (B).
3. Open the zipper on the back of the body (A). Align the threaded rods (C) on the console back cushion with the pre-drilled holes in the body (A). Ensure the threaded rods are properly aligned with the holes, then firmly press the console back cushion downward until it is fully seated. From the rear of the body (A), install the knob nuts (D) onto the threaded rods and tighten them clockwise until the console back cushion is securely fastened.
4. Plug the power cord into a wall outlet or power strip. Make sure the plug is fully inserted before operating the chair.

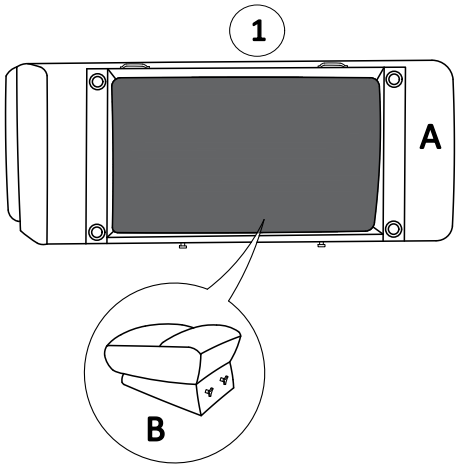

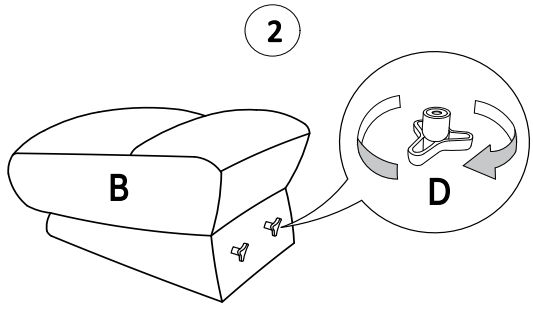

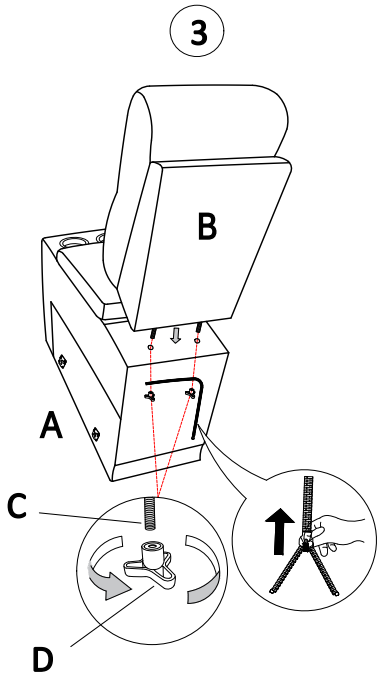

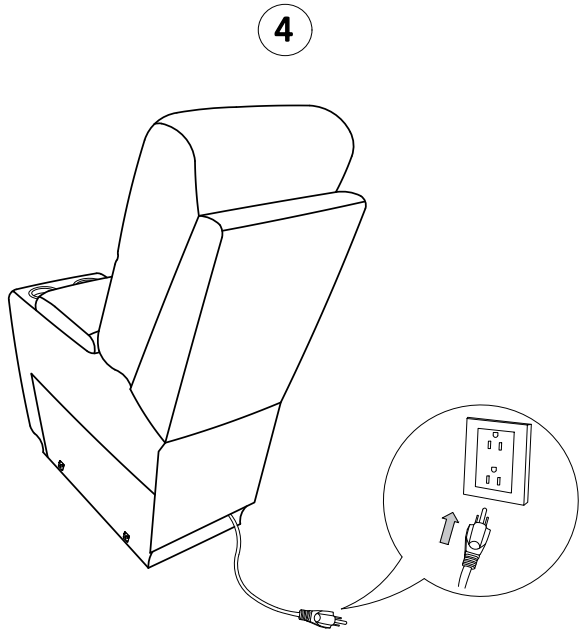

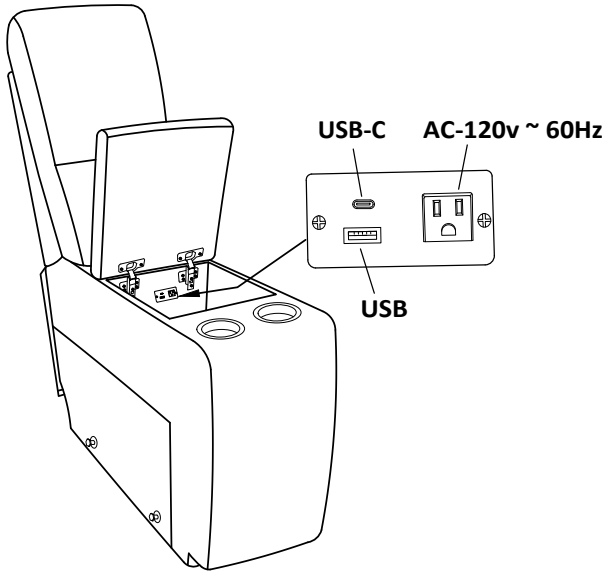

Connecting your sectional

Begin sectional connection by placing the pieces in the desired location in the room. Connect the pieces together using the brackets on the sides of each piece.

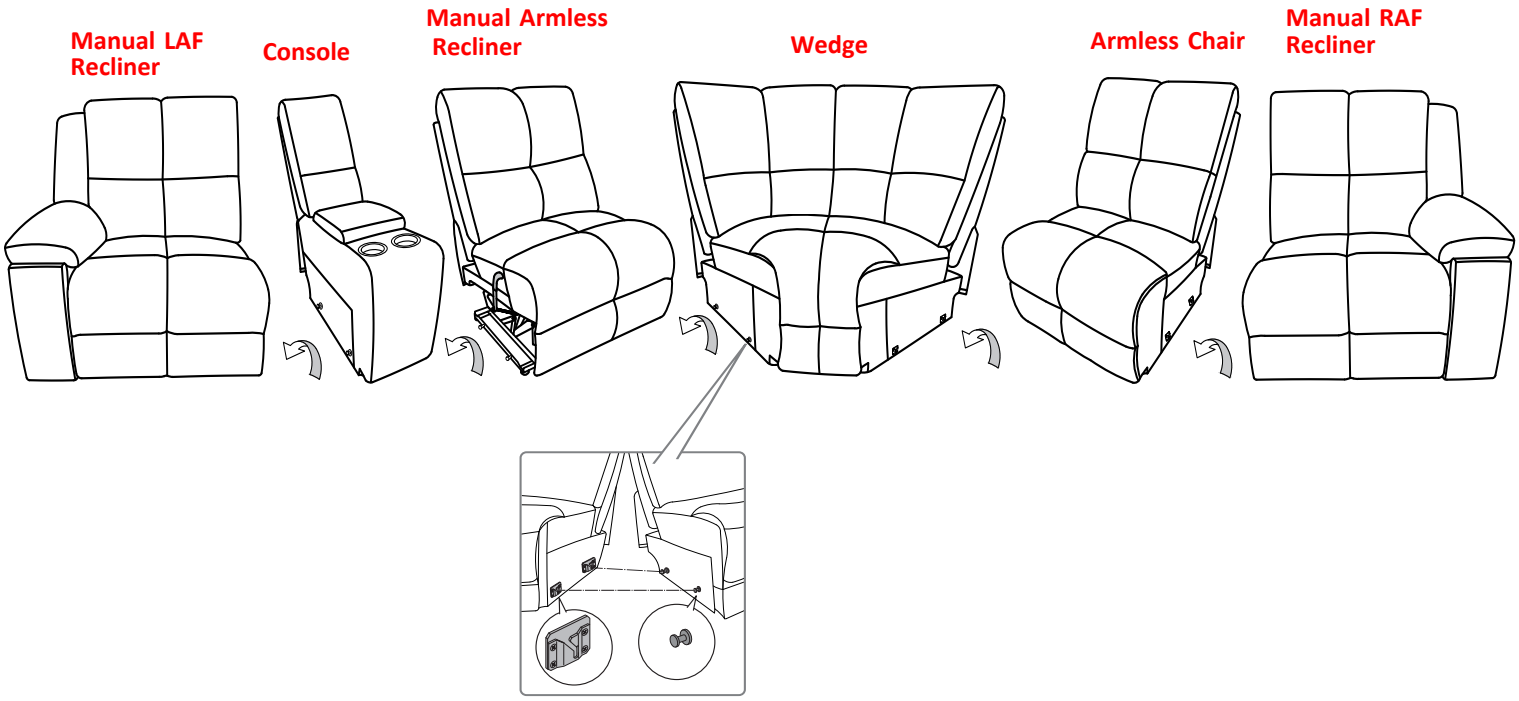

Connection#1:

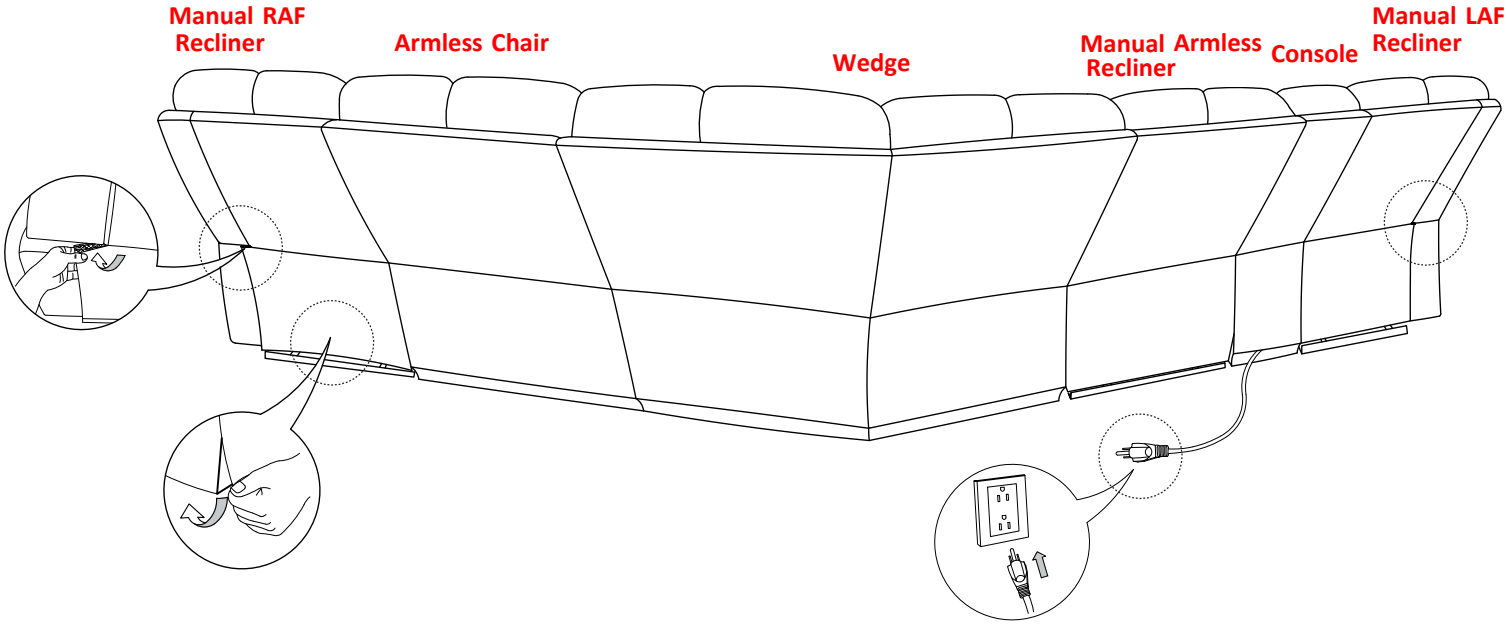

Connection#2:

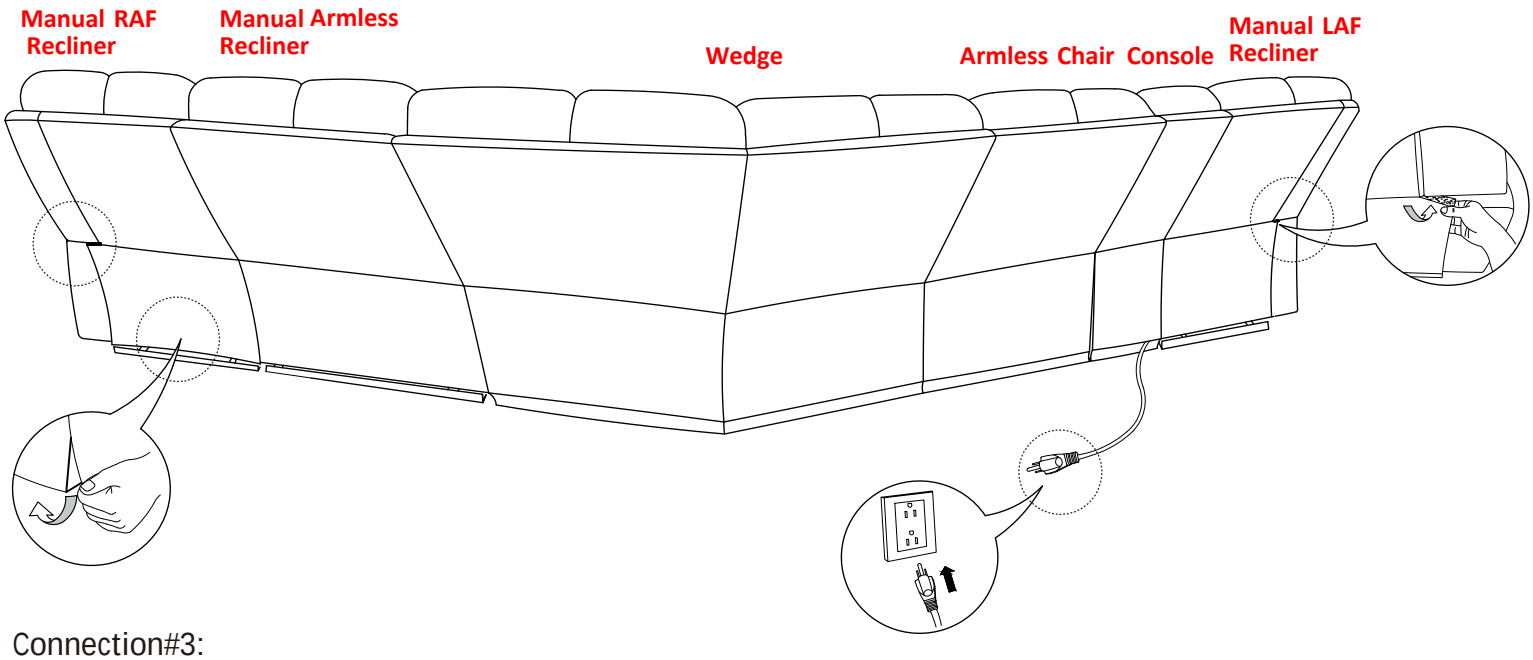

Connection#3:

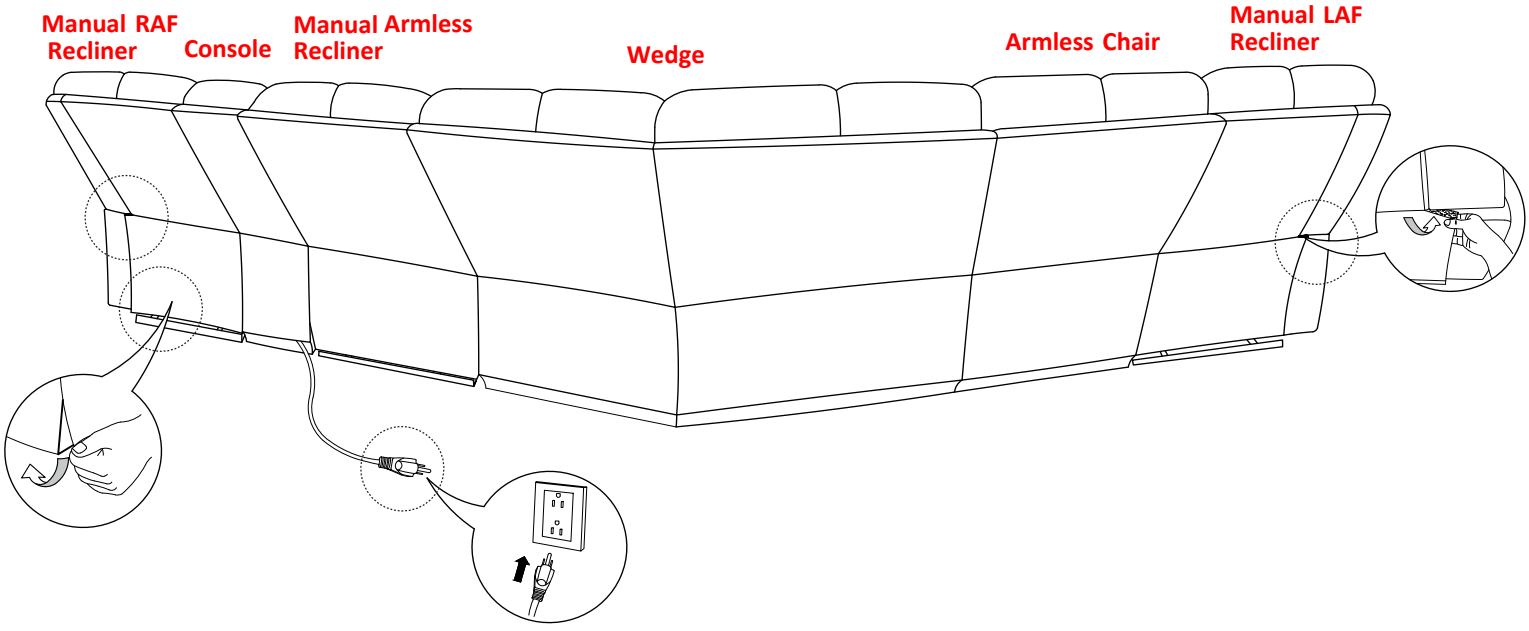

Connection#4:

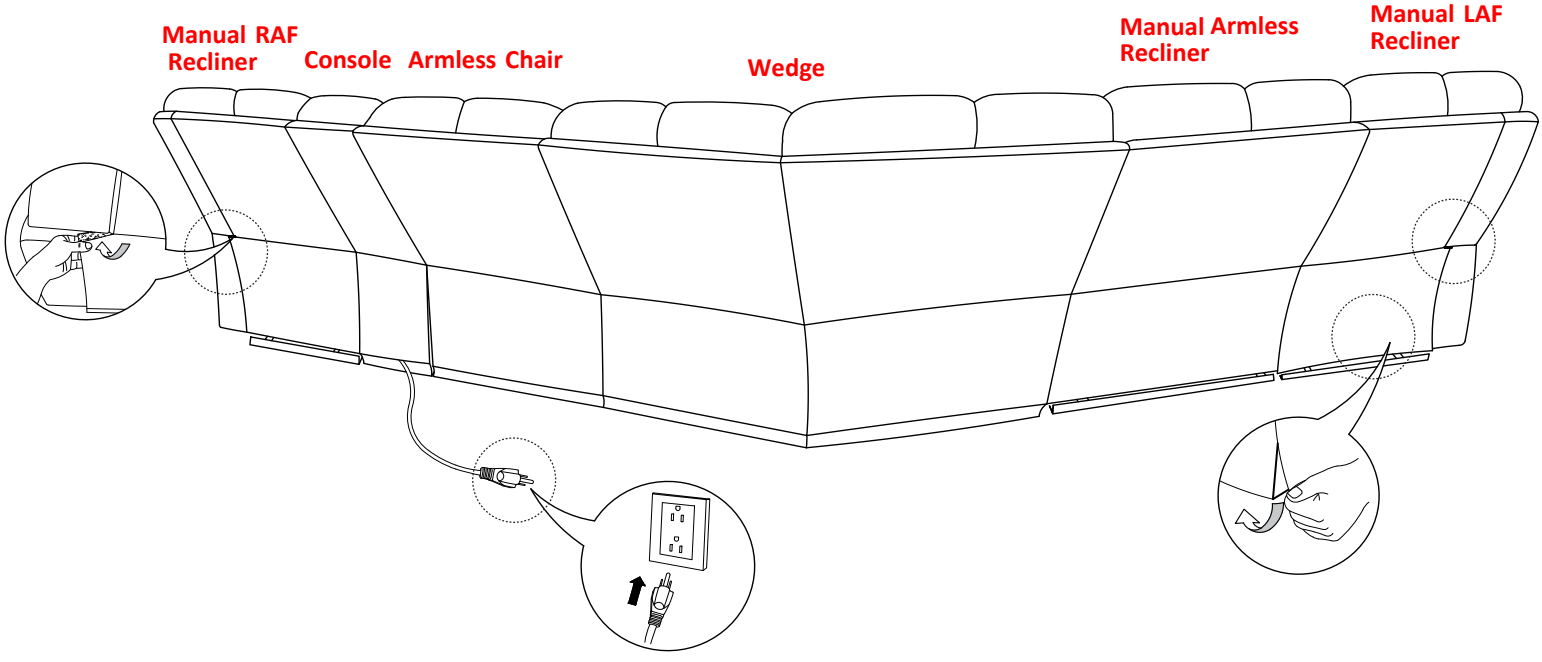

Remark:

1. Attach the flap to the chair frame by pulling it downward, then press the lower edge of the flap underneath the seat base and firmly press the Velcro fasteners together to secure it. Repeat this procedure for all units: LAF Recliner, RAF Recliner, Armless Recliner, Armless Chair, Wedge, and Console. After completing all units, attach the flaps of the LAF Recliner and RAF Recliner to the underside of the LAF Wing and RAF Wing, then firmly press the Velcro fasteners together to secure them.

2. After completing the installation, plug the AC power cord at the rear of the Console into a wall outlet. The sectional is now ready for use.

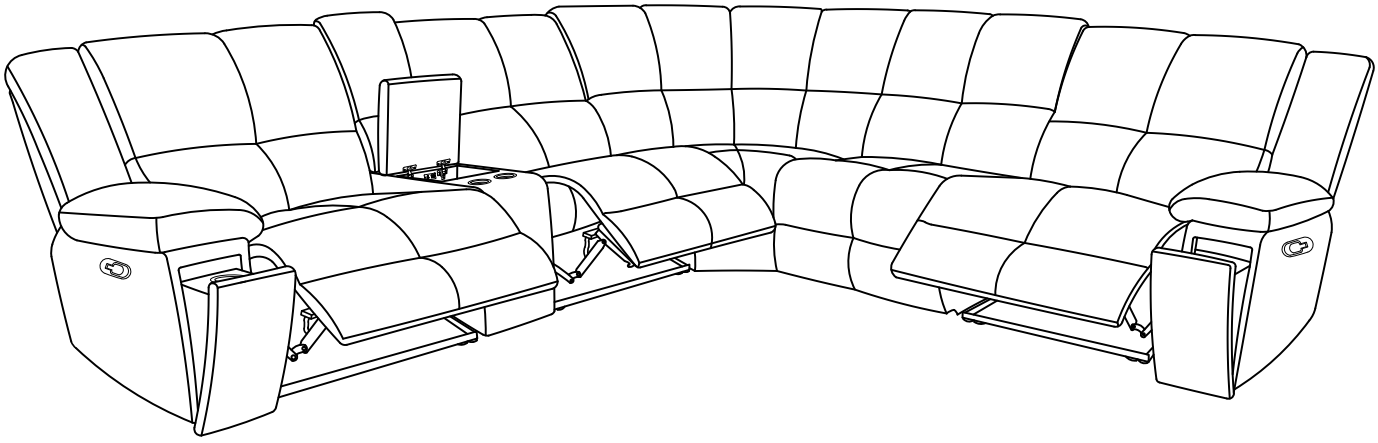

Manual LAF/ RAF Recliner

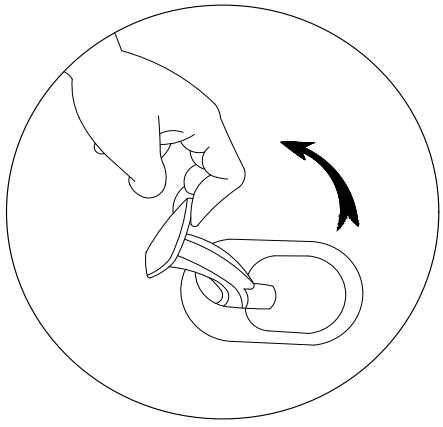
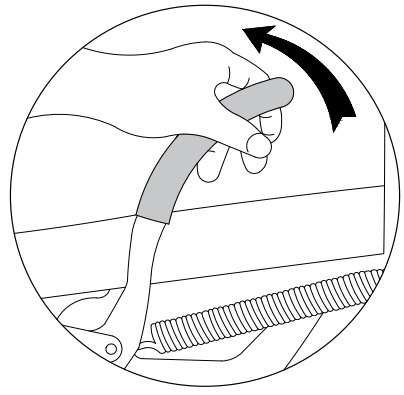
Manual Armless Recliner