Airvault

Installation Manual

Model: 55840 Matte Black
55842 Fresh White
Fan weight ±2 lbs: 23.9 lbs (10.8 kg)

ENERGY STAR

3D INTER*Active* GUIDE

Step 1: Scan QR code with smart phone or tablet

Step 2: Follow on screen instructions

Step 3: Register your product

Hunter

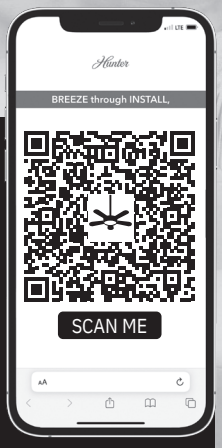

Our digital guided installation takes you seamlessly from unboxing to completion with clear instructions and visual aids. With the convenience of accessing the guide on your smartphone, tablet, or computer, you can take your installation experience wherever you go.

PG4260 r061126

Congratulations on purchasing your new Hunter® ceiling fan!

This manual is intended to guide you through the assembly and installation of your ceiling fan. While the installation process is generally similar from home to home, electrical systems, wiring configurations, ceiling structures, and junction boxes can vary significantly depending on the age, location, and construction of your home. The illustrations and examples in this manual are provided as general installation guides and may not exactly match the electrical box, wiring, or mounting conditions in your specific installation. If you are unsure about any step of the installation process, do not proceed. Contact a qualified electrician to ensure your ceiling fan is installed safely and in accordance with local electrical codes and regulations. We also provide telephone support at 1.888.830.1326 or visit us at HunterFan.com.

REGISTER TODAY! FREE Limited Lifetime Warranty

To activate your free limited lifetime warranty, please scan the QR code and register your product. This will ensure you receive exceptional service and support for years to come.

SCAN ME

⚠ WARNING **READ and SAVE These Instructions**

Warning

w.1 - To reduce the risk of fire, electrical shock, or personal injury, mount fan directly from building structure and/or an outlet box marked acceptable for fan support of 70 lbs (31.8 kg) and use the mounting screws provided with the outlet box.

w.2 - To avoid possible electrical shock, before installing or servicing your fan, disconnect the power by turning off the circuit breakers to the outlet box and associated wall switch location. If you cannot lock the circuit breakers in the off position, securely fasten a prominent warning device, such as a tag, to the service panel.

w.3 – To reduce the risk of electric shock, this fan must be installed with an isolating wall control/switch.

w.4 - To reduce the risk of personal injury, do not bend the blade brackets when installing the blade brackets, balancing the blades, or cleaning the fan. Do not insert foreign objects in between rotating fan blades.

w.5 - This appliance can be used by children aged from 8 years and above and persons with reduced physical, sensory or mental capabilities or lack of experience and knowledge if they have been given supervision or instruction concerning use of the appliance in a safe way and understand the hazards involved. Children shall not play with the appliance. Cleaning and user maintenance shall not be made by children without supervision. It is recommended that children be supervised to ensure that they are not using the appliance improperly.

w.6 - To reduce the risk of fire or electric shock or injury to persons, do not use replacement parts that have not been recommended by the manufacturer (e.g. parts made at home using a 3D printer).

Caution

c.1 - All wiring must be in accordance with national and local electrical codes ANSI/NFPA 70. If you are unfamiliar with wiring, use a qualified electrician.

c.2 - Use only Hunter replacement parts.

This equipment has been tested and found to comply with the limits for a Class B digital device, pursuant to part 15 of the FCC Rules. These limits are designed to provide reasonable protection against harmful interference in a residential installation. This equipment generates, uses and can radiate radio frequency energy and if not installed and used in accordance with the instructions may cause harmful interference to radio communications.

However, there is no guarantee that interference will not occur in a particular installation. If this equipment does cause harmful interference to radio or television reception, which can be determined by turning the equipment off and on, the user is encouraged to try to correct the interference by one or more of the following measures:

- Reorient or relocate the receiving antenna.
- Increase the separation between the equipment and receiver.
- Connect the equipment into an outlet on a circuit different from that to which the receiver is connected.
- Consult the dealer or an experienced radio/TV technician for help.

Caution: modifications not approved by the party responsible for compliance could void user's authority to operate the equipment.

This device complies with Part 15 of the FCC Rules. Operation is subject to the following two conditions: (1) This device may not cause harmful interference, and (2) this device must accept any interference received, including interference that may cause undesired operation.

© 2026 Hunter Fan Company
7130 Goodlett Farms Pkwy, Suite 400
Memphis TN 38016

Intertek

This product conforms to UL Standard 507.

Here are the tools you'll need to complete your installation:

Ladder

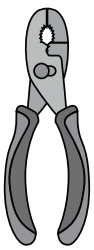
Pliers

Screwdriver

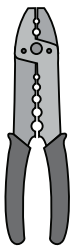
Wire Strippers

OPTIONAL If mounting to a support structure, you will also need these tools.

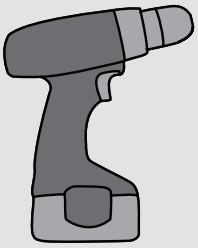
Drill

9/64" Drill Bit

Here is what comes in your box:

We recommend that you pull everything out of the box and lay it out. We have grouped the drawn components below with the hardware you'll need for those parts. The screws below are drawn to scale to make it easier to identify what piece of hardware is needed to install each component.

Hunter Pro Tip:

Do not discard the hardware bags or mix parts from different bags. Make note of the symbol printed on each hardware bag. The symbols can be used to identify the appropriate hardware for each step.

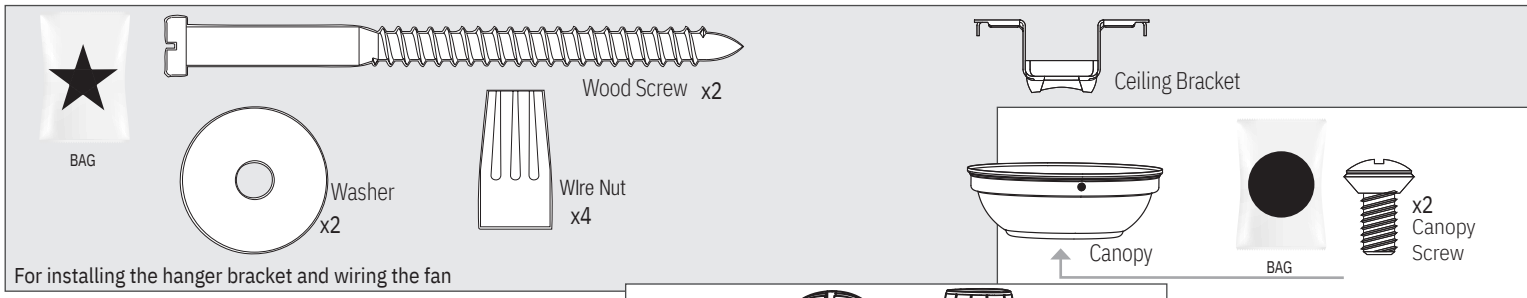

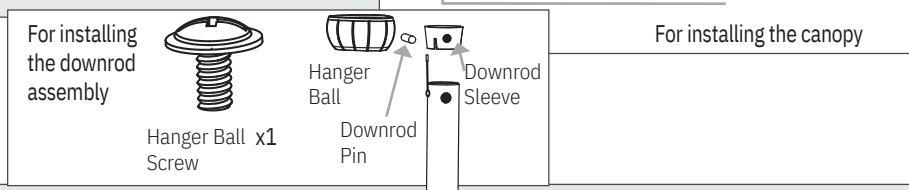

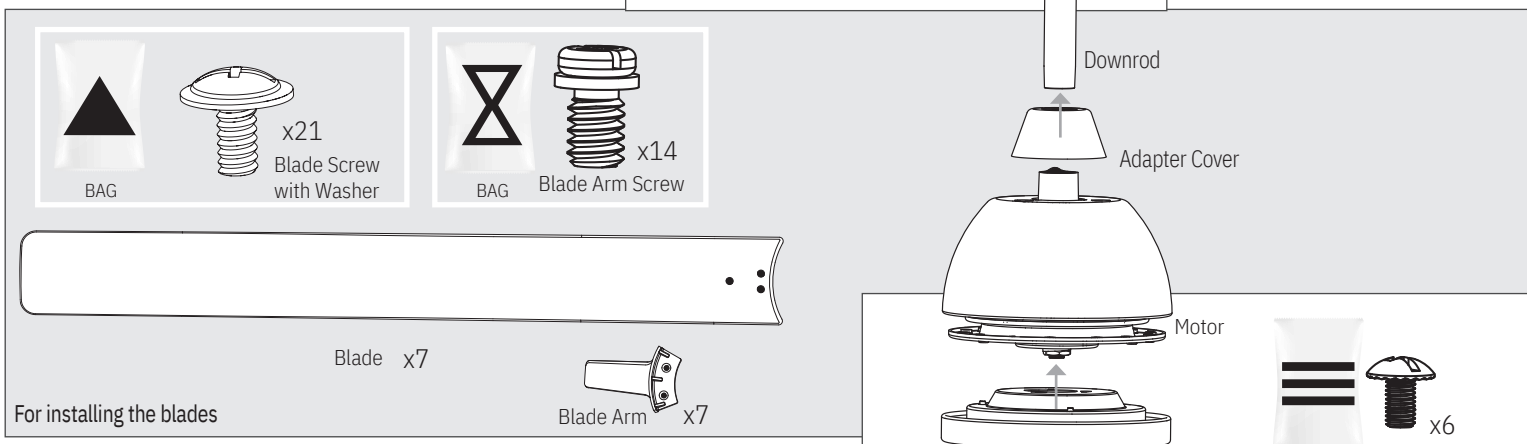

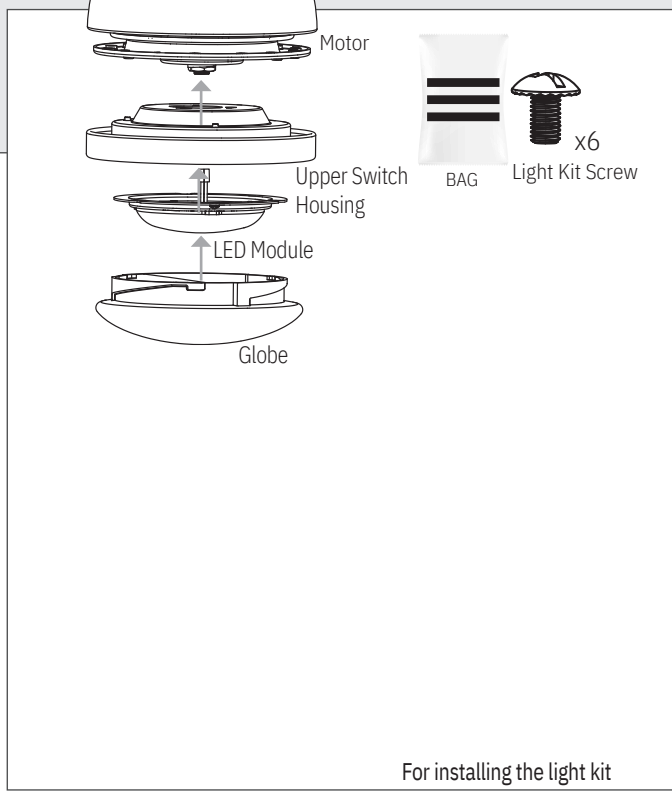

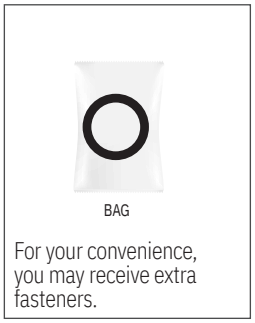

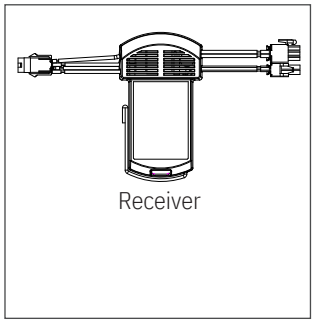

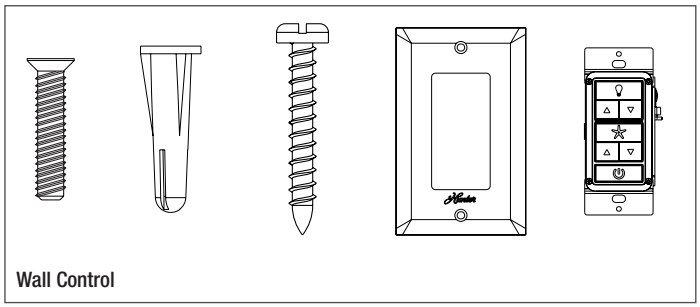

Note:

Fan style may vary.

Find a part that is missing or damaged?
Don't take it back to the store. Let us make it right. Visit us at HunterFan.com or call us at 1.888.830.1326.

Choosing the Right Installation Location

You probably bought this fan with a location in mind. Let's check below to make sure it is a good fit.

Check the room dimensions:

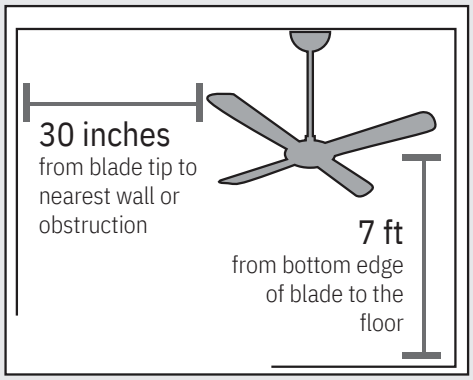

Check the outlet box:

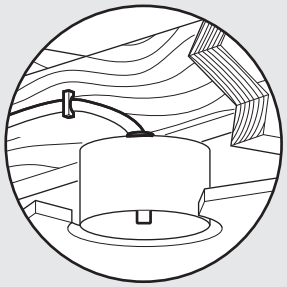

You must be able to secure the fan to building structure or fan-rated outlet box.

⚠ CAUTION

Do not install the fan in areas subject to excessive winds. Excessive wind may cause movement beyond normal operation, resulting in possible damage to the fan or surrounding property.

Checking the Ceiling Angle:

Standard Mounting

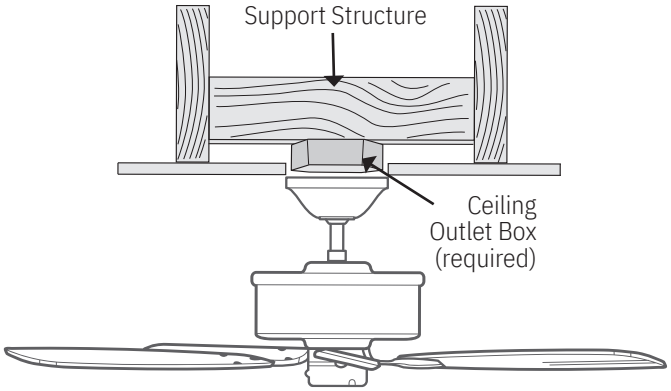

If you have a flat ceiling:

Hang your fan by a standard downrod. Some fans come with a shorter downrod for a Low Profile installation.

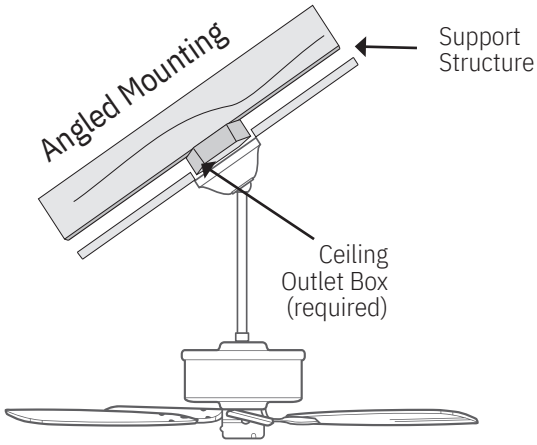

If you have an angled or vaulted ceiling:

1. You will need a longer downrod. (sold separately at HunterFan.com)
2. If your ceiling angle is greater than 34°, you will also need an Angled Mounting Kit. (Sold separately at HunterFan.com)

Angled Mounting

A little more information on Angled Mounting:

For optimum performance and appearance, a longer downrod should be used with your Hunter ceiling fan when installing on high or angled ceiling. If your ceiling is angled greater than 34° you will also need an Angled Mounting Kit. Longer downrods and the Angled Mounting Kit are sold separately at HunterFan.com.

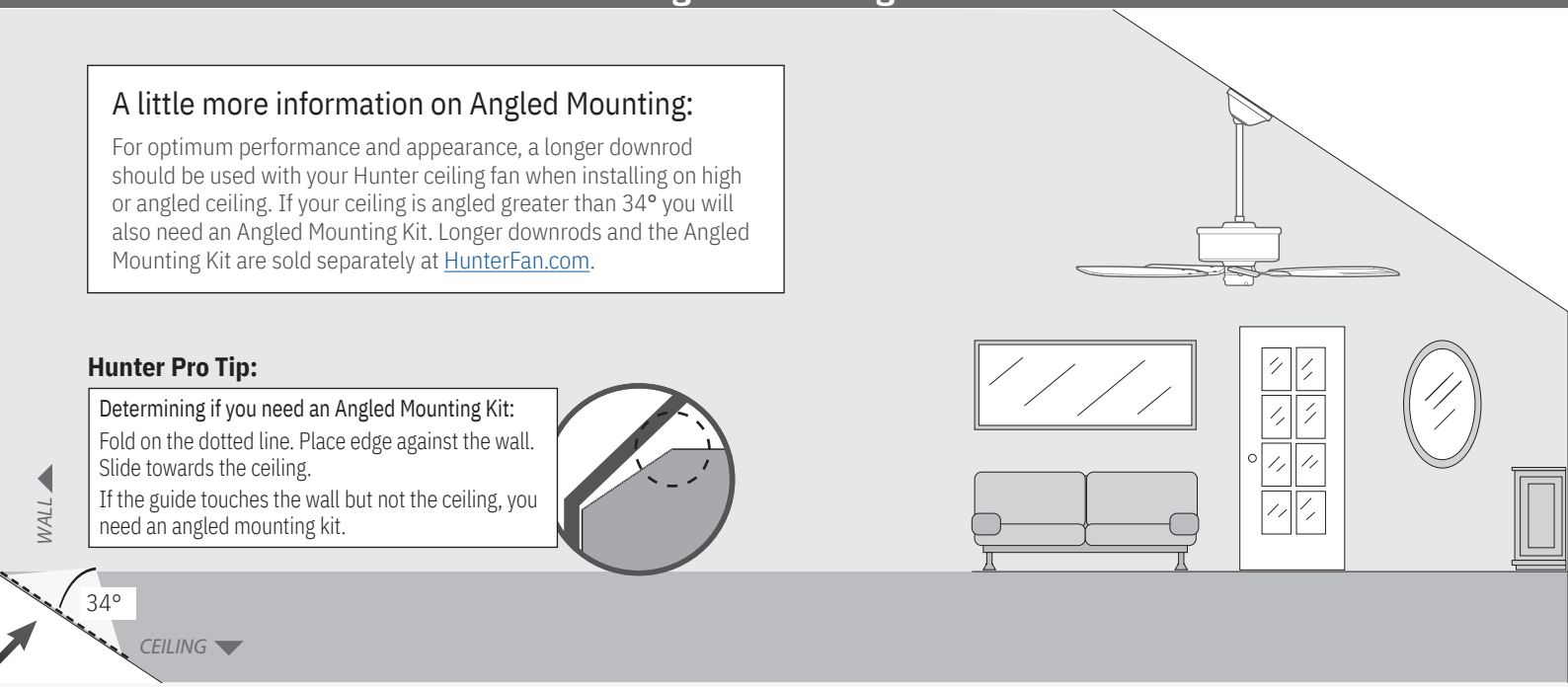

Hunter Pro Tip:

Determining if you need an Angled Mounting Kit:

Fold on the dotted line. Place edge against the wall. Slide towards the ceiling.

If the guide touches the wall but not the ceiling, you need an angled mounting kit.

Installing the Ceiling Bracket

Do this first!

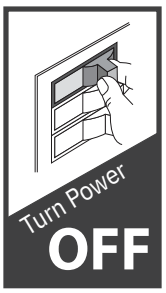

You have **two options** for installation. Pick which one works best for your location. Remove any existing bracket prior to installation. **Only use the provided Hunter ceiling bracket that came in your fan's box.**

Hunter Pro Tip:

The machine screws are the ones that came with your outlet box.

WARNING

- To avoid possible electrical shock, before installing your fan, disconnect the power by turning off the circuit breakers to the outlet box associated with the wall switch location.
- All wiring must be in accordance with national and local electrical codes ANSI/NFPA 70. If you are unfamiliar with wiring or in doubt, consult a qualified electrician.
- The ceiling fan must be grounded. If the ground wire for the installation site is not present, immediately **STOP** installation and consult a qualified electrician.

Option 1:
Machine Screws

Use machine screws *(provided with outlet box)* and washers when securing to existing ceiling fan-rated outlet box. Make sure it is securely installed and is acceptable for fan support of 70 lbs.

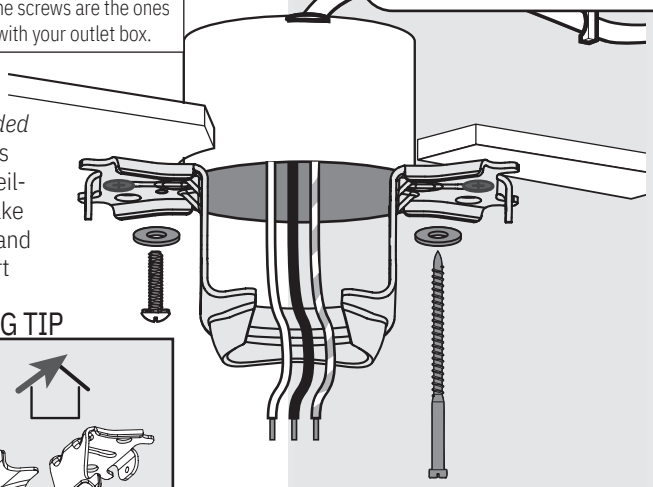

Option 2:
Wood Screws

Use wood screws and washers (included) when securing to support structure with approved electrical outlet box. Drill 9/64 inch pilot holes in support structure to aid in securing ceiling bracket with hardware found in the ★ hardware bag.

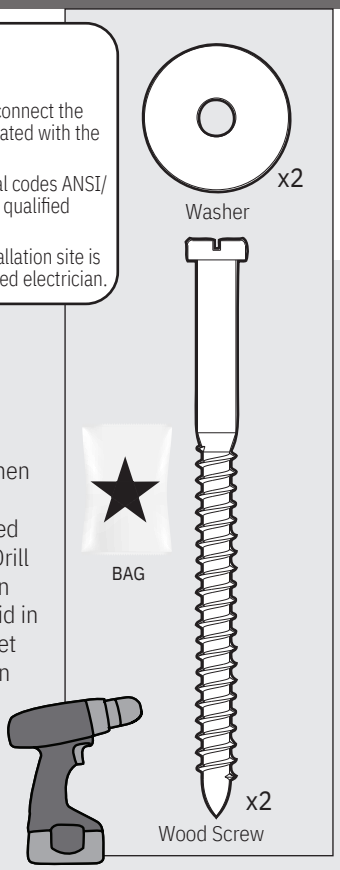

ANGLED MOUNTING TIP

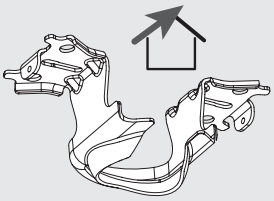

For angled ceilings, point opening toward peak.

Wiring the Bracket

Single Switch Wiring

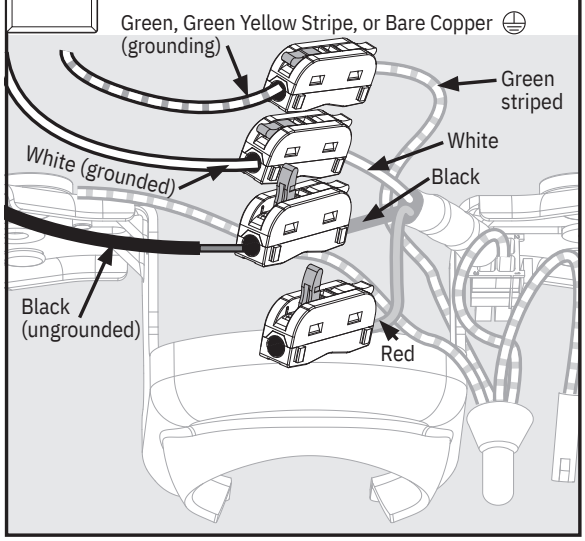

OR

Dual Switch Wiring

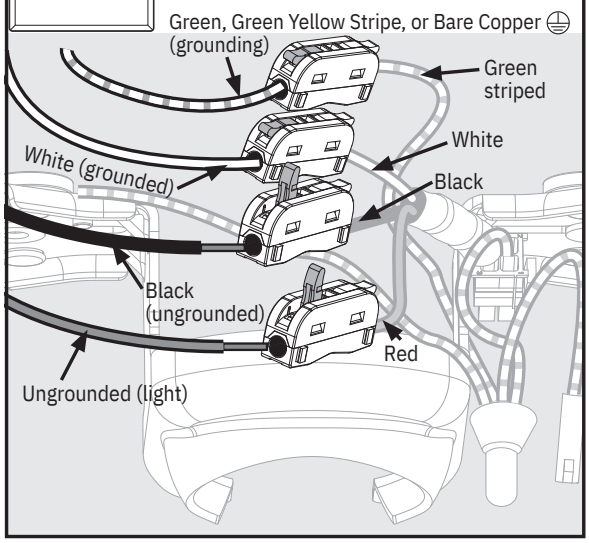

Connect wiring from ceiling to lever lock wiring (on side of canopy mount) by lifting lever and inserting wire. Lift lever on connector until fully upright to open. Insert stripped wire and secure by lowering lever. Make sure no bare or uninsulated wire is exposed.

Hunter Pro Tip:

Turn the wires upward and push them carefully back through the hanger bracket into the outlet box. Spread the wires apart, with the grounded wires on one side of the outlet box and the ungrounded wires on the other side of the outlet box. Make sure that the wires are still attached to the connectors.

NOTICE

Twist wire strands prior to inserting into connector.

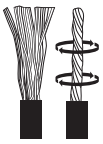

Installing the Downrod

Follow below if you are using the downrod that came pre-assembled in your box. Need to install a longer or shorter downrod? Check out the guide at the end of this manual.

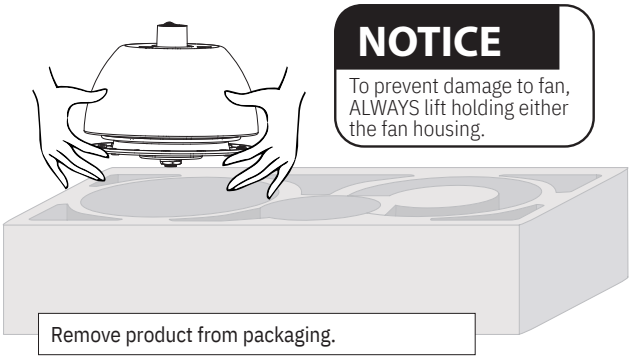

NOTICE

To prevent damage to fan, ALWAYS lift holding either the fan housing.

Remove product from packaging.

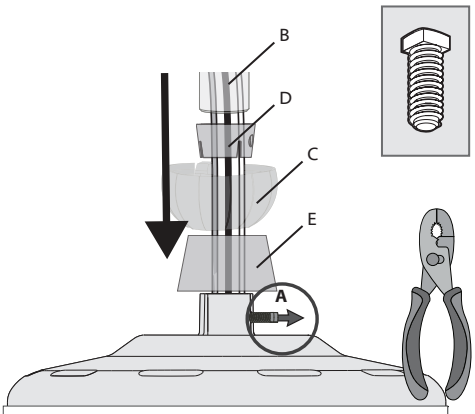

Back out the pre-installed setscrew (A) so that the downrod (B) can be inserted. Guide the downrod ball (C), sleeve (D), adapter cover (E), and downrod (B) down the wires coming from the fan.

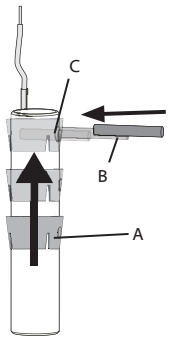

Slide the downrod sleeve (A) up the downrod. Insert the down rod pin (B) into the pin hole (C) on the top of the downrod.

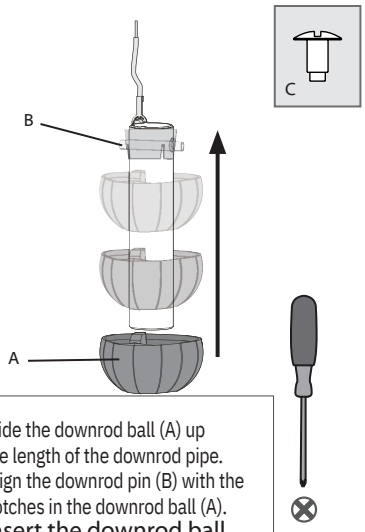

Slide the downrod ball (A) up the length of the downrod pipe. Align the downrod pin (B) with the notches in the downrod ball (A). **Insert the downrod ball screw (c) into the hole in the top of the downrod ball**

NOTICE

Make sure wires are not being tangled while twisting.

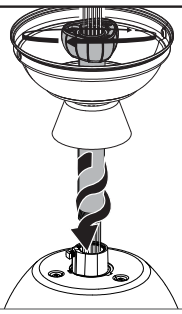

Hand tighten the downrod (at least 4-5 full turns) until it stops.

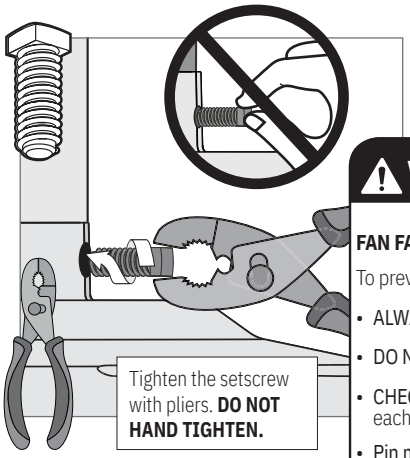

Tighten the setscrew with pliers. **DO NOT HAND TIGHTEN.**

Note:

Fan style may vary.

⚠ WARNING

FAN FALL HAZARD

To prevent SERIOUS INJURY or DEATH:

- ALWAYS tighten setscrew with pliers.
- DO NOT hand tighten setscrew.
- CHECK the setscrew is tight using pliers each time you change fan direction.
- Pin must be reinserted to secure downrod assembly

Hanging the Fan

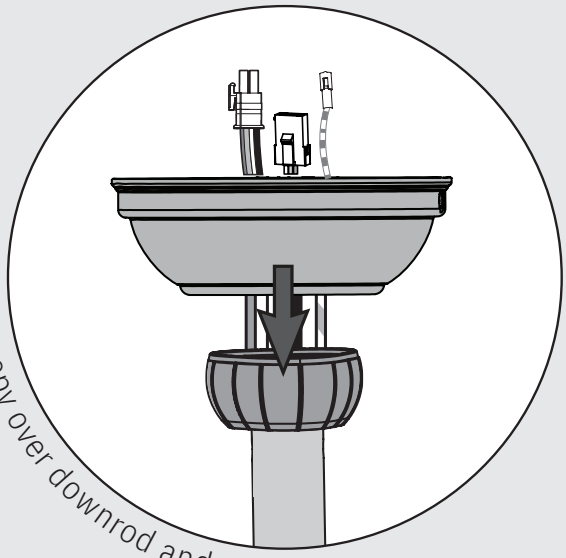

Slide canopy over downrod and wires.

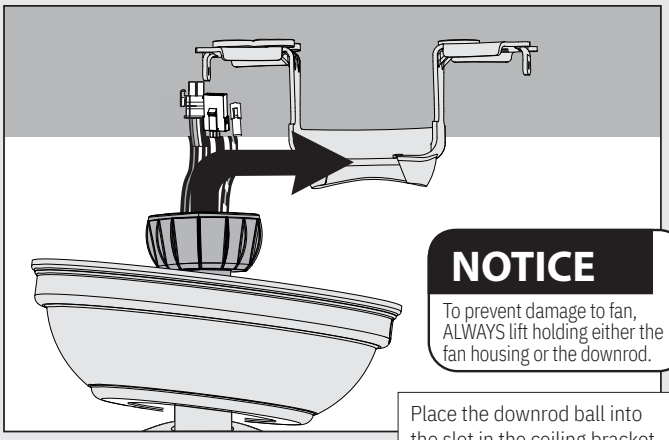

NOTICE

To prevent damage to fan, ALWAYS lift holding either the fan housing or the downrod.

Place the downrod ball into the slot in the ceiling bracket.

Note:

Fan style may vary.

Making Connections for the Receiver and the Fan

Note:
Fan style may vary.

From receiver
From bracket
From receiver
From fan
From receiver
From fan
From bracket
From fan

Connect wiring harness from ceiling bracket to the wiring harness from the receiver. Match up the colored wires.

Connect both wiring harnesses from fan to the wiring harness from the receiver. Match up the colored wires.

Connect the grounding wire plug from the downrod to the grounding wire plug from the ceiling bracket.

Installing the Canopy

Fit the canopy in place as shown.

Lift the canopy into place so that the screw holes are aligned.

Insert the two canopy screws found in the ● hardware bag.

BAG

x2
Canopy Screw

Note:
Fan style may vary.

Assembling the Blades:

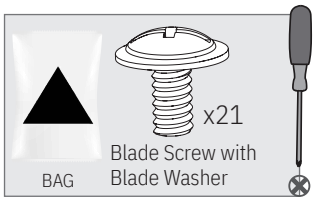

Install the blade onto the blade iron with the blade screw with washers found in the ▲ hardware bag.

Repeat x7

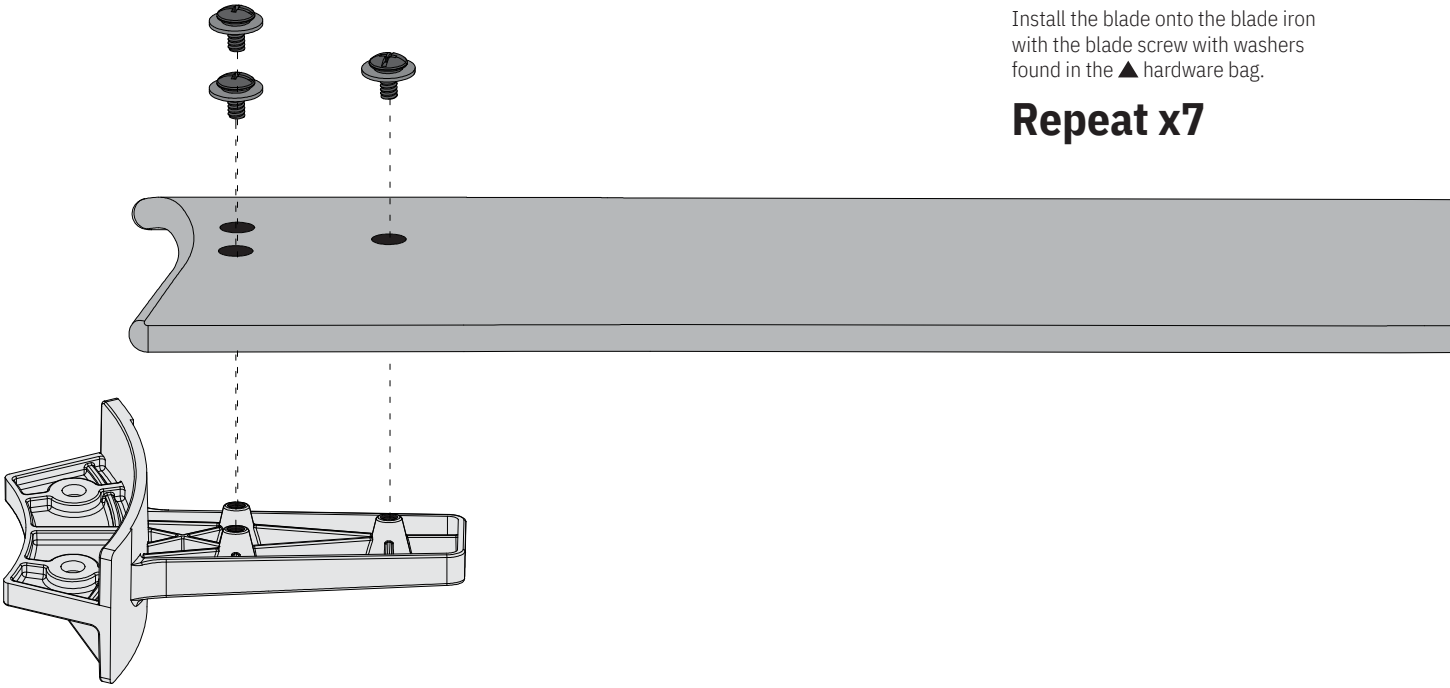

⚠ IMPORTANT

NOTE: Follow the instructions on the blade. Installing it incorrectly could result in your fan not functioning.

Installing the Blades:

Lightly attach the blade arms to the motor with screws found in the hardware bag ⧗, then securely tighten after both screws are attached.

Repeat x7

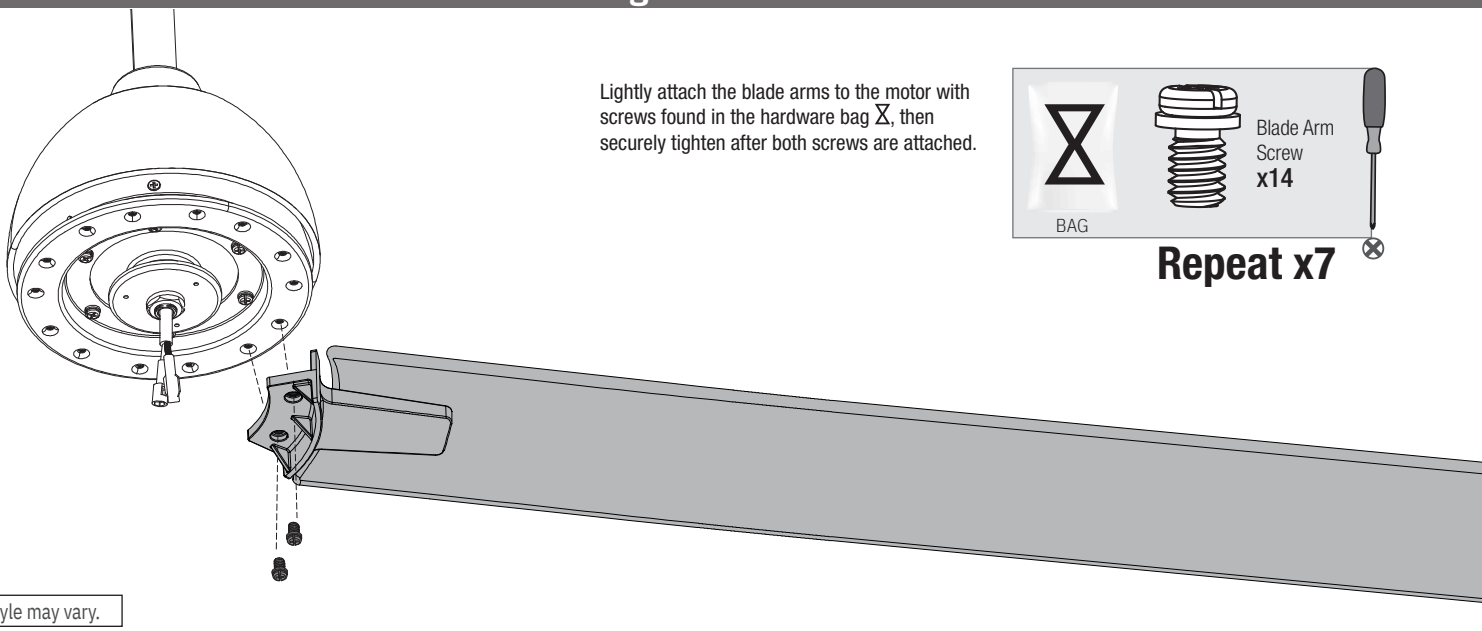

Note:

Fan style may vary.

Assembling the Light Kit

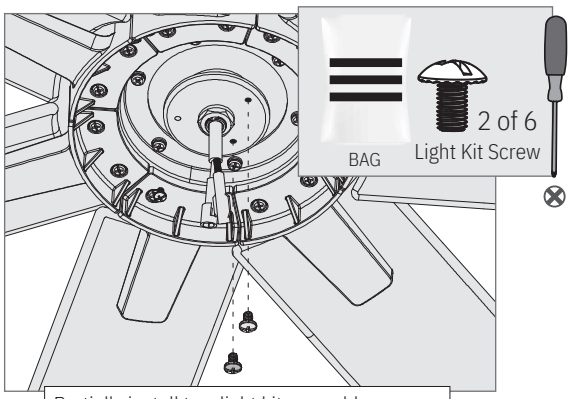

Partially install two light kit assembly screws, found in the ≡ hardware bag, halfway into the motor housing as shown. It does not matter which two screw holes you choose.

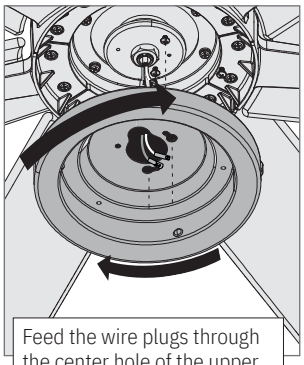

Feed the wire plugs through the center hole of the upper switch housing, then wrap keyhole slots around the screws and twist clockwise.

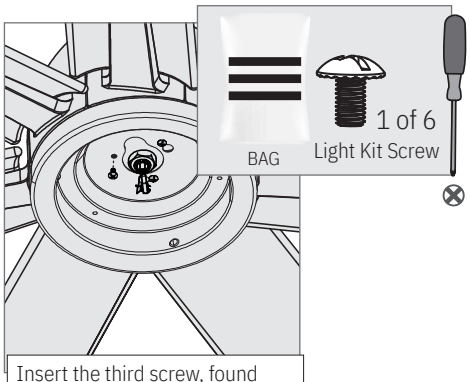

Insert the third screw, found in the ≡ hardware bag, into place and then tighten all three screws.

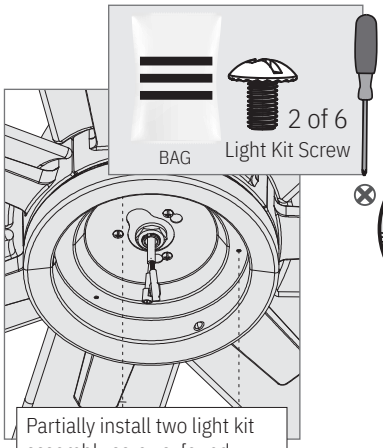

Partially install two light kit assembly screws, found in the ≡ hardware bag, halfway into the upper switch housing as shown. It does not matter which two screw holes you choose.

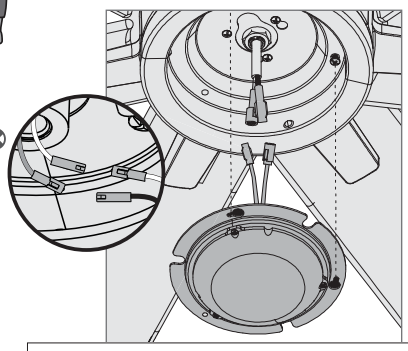

Connect the single-pin connectors from the light kit to the connectors from the fan. Connect the white wires together. Connect the blue and black wires together. Wrap the keyhole slots around the screws and twist clockwise. Make sure all the wires from the fan and the light kit are snug inside the center of the light kit, not pinched in between the upper switch housing and the light kit or hanging out of the sides.

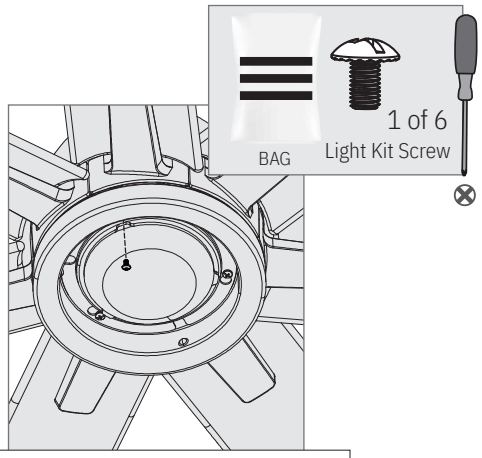

Insert the last light kit screw, found in the ≡ hardware bag. Tighten all three screws.

⚠ WARNING

FAN FALL HAZARD
Make sure all screws are tight to secure the light fixture.

Installing the Globe

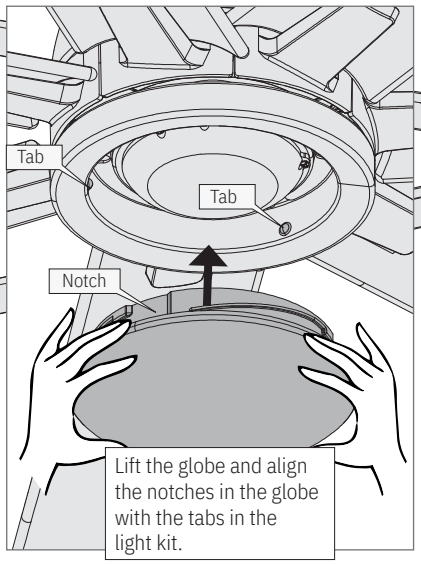

Lift the globe and align the notches in the globe with the tabs in the light kit.

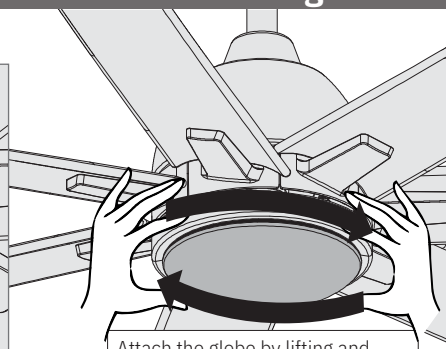

Attach the globe by lifting and turning clockwise one third of a full turn of the globe until it stops.

NOTE: Check to ensure proper engagement.

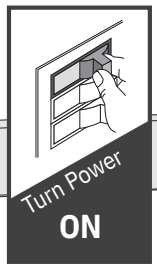

NOTE: On start up your ceiling fan will oscillate back and forth. This is NORMAL OPERATION for DC ceiling fan as it goes through its calibration cycle. The fan is NOT DEFECTIVE.

1 Turning off the power

Ensure the power is OFF at the outlet box and wall switch location before proceeding with installation.

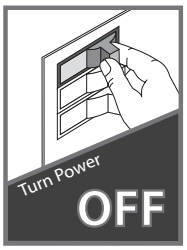

2 Installing the battery

To access the battery compartment, slide the battery door up.

Replace the used battery with two AAA batteries when needed.

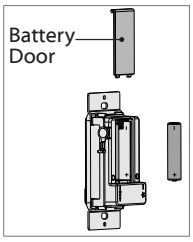

3 Wiring the Wall Control

Connect the grounding wire from the wall control to the grounding wire from the switch box using the provided wire nuts.

Connect the “LIVE IN” from the switch box to the “~VAC” from the wall control using the provided wire nuts.

Connect the “LIVE OUT” from the switch box to the “FAN” out from the wall control using the provided wire nuts.

Push all wires into the switch box.

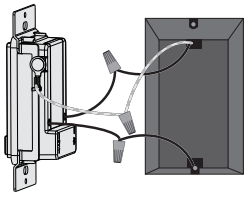

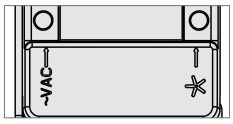

4 Installing the Wall Control

Install the longer screws through the slots in the wall control into the switch box screw holes.

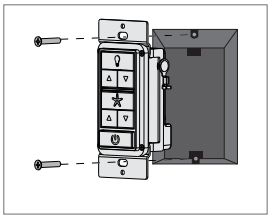

5 Installing the Wall Plate

Install the shorter screws through the wall control plate and into the screw holes in the wall control.

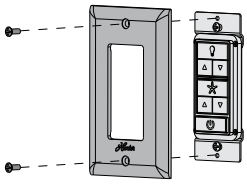

6 Turning on the power

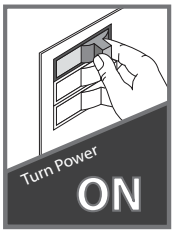

KEY PRESS	FUNCTION
LIGHT FUNCTIONS	
	Light On/Off
	Light Dimming Control
Long Press △	Light High
Long Press ▽	Light Low
Long Press ▽ + △	Dimming Mode On/Off
FAN FUNCTIONS	
	Fan On/Off
	Fan Speed Control
Long Press △	Fan High
Long Press ▽	Fan Low
Long Press	Reverse
	Power On/Off
Long Press +	Pair Function

7

The remote transmitter is already paired to the receiver and ready to use. If you need to pair your remote, cycle power to the fan by turning power off and back on at the wall switch (or circuit breaker if necessary). Within three minutes, do the following:

8

Reference the included remote function card for information on how to use your wall control!

NOTICE

- Always purchase the correct size and grade of battery most suitable for the intended use.
- Replace all batteries of a set at the same time.
- Clean the battery contacts and also those of the device prior to battery installation.
- Ensure the batteries are installed correctly with regard to polarity (+ and -).
- Remove batteries from equipment which is not to be used for an extended period of time.
- Remove used batteries promptly.

Setting up HunterSMART™ WiFi

HunterSMART connects to available 2.4 GHZ WiFi networks.

1 Download the app:

To download the app, scan your preferred device here or search "HunterSMART" in your app store.

Download on the App Store

ANDROID APP ON Google Play

2 Open the app, sign in, and tap "+" to add a device.

3 Follow the onscreen prompts to set up your Matter fan.

Hunter Pro Tip:

What's the Matter?
No proprietary hub is required - Matter operates over Wi-Fi and needs a Matter controller on your network to commission and manage devices. Many common smart home devices—such as Apple HomePod, Amazon Echo, or Google Nest Hub—serve as Matter controllers and may already be part of your setup. These controllers enable seamless operation and device integration.

Use of the HomeKit logo means that an electronic accessory has been designed to connect specifically to iPod, iPhone, or iPad, respectively, and has been certified by the developer to meet Apple performance standards. Apple is not responsible for the operation of this device or its compliance with safety and regulatory standards. Please note that the use of this accessory with iPod, iPhone, or iPad may affect wireless performance.

Compatible with iOS 16.2 or higher / Android 12.0 or higher
Android and Google Play are trademarks of Google Inc.
Apple and the Apple logo are trademarks of Apple Inc., registered in the U.S. and other countries.
App Store is a service mark of Apple Inc.

Note: The Matter setup QR code label is located either inside the remote control cover or on the fan housing (location may vary). Additional label(s) may be included. The Matter setup code is essential for initial setup and any future reconnections. To ensure it is always available, place the label in a permanent location, such as on the fan housing or with this manual.

matter | WORKS WITH HunterSMART™ App | works with alexa | Works with Apple Home | works with Google Home

Limited Lifetime Warranty

Hunter Fan Company grants this limited warranty to the original purchaser of this Hunter ceiling fan. This document can be found at www.HunterFan.com.
Thank you for choosing Hunter!

How Can Warranty Service Be Obtained?

Proof of purchase is required when requesting warranty service. The original purchaser must present a sales receipt or other document that establishes proof of purchase. Hunter, at its sole discretion, may accept a gift receipt. To obtain service, contact Hunter Fan Company online or by phone.

www.HunterFan.com/Support/Contact-Us/
1-888-830-1326

Please do not ship your fan or any fan parts to Hunter. Delivery will be refused.

What Does This Warranty Cover?

Motor — Limited Lifetime Warranty
If any part of your ceiling fan motor fails during your ownership of the fan due to a defect in material or workmanship, as determined solely by Hunter, Hunter will provide you with a replacement fan free of charge.* The foregoing limited warranty applies only to the motor itself and does not apply to electronic controls – such as remote control transmitters, remote control receivers, or capacitors – used in conjunction with the motor. Such electronic control items are included in the Three-year limited warranty below.

Other — Three-Year Limited Warranty
Except as otherwise indicated throughout this warranty, if any part of your Hunter ceiling fan fails at any time within three years of the date of purchase due to a defect in material or workmanship, as determined solely by Hunter, Hunter will provide a replacement part free of charge.*

* If no replacement product/part can be provided for your fan, we will provide a comparable or superior replacement product/part at the sole discretion of Hunter.

What Does This Warranty NOT Cover?

Labor Excluded. This warranty does not cover any costs or fees associated with the labor (including electrician's fees) required to install, remove, or replace a fan or any fan parts.
There is no warranty for light bulbs; remote control batteries; fans purchased or installed outside the United States; fans owned by someone other than the original purchaser; fans for which proof of purchase has not been established; fans purchased from an unauthorized dealer; ordinary wear and tear; minor cosmetic blemishes; refurbished fans; and fans that are damaged due to any of the following: improper installation, misuse, abuse, improper care, failure to follow Hunter instructions, accidental damage caused by the fan owner or related parties, modifications to the fan, improper or incorrectly performed maintenance or repair, improper voltage supply or power surge, use of improper parts or accessories, failure to provide maintenance to the fan, excessive wind conditions, or acts of God (e.g. storms).
ORIGINAL PURCHASER'S SOLE AND EXCLUSIVE REMEDY FOR A CLAIM OF ANY KIND WITH RESPECT TO THIS PRODUCT SHALL BE THE REMEDIES SET FORTH HEREIN. HUNTER FAN COMPANY IS NOT RESPONSIBLE FOR CONSEQUENTIAL OR INCIDENTAL DAMAGES, DUE TO PRODUCT FAILURE, WHETHER ARISING OUT OF BREACH OF WARRANTY, BREACH OF CONTRACT, OR OTHERWISE. Some States do not allow the exclusion or limitation of incidental or consequential damages, so the above limitation or exclusion may not apply to you.
ANY IMPLIED WARRANTIES OF MERCHANTABILITY OR FITNESS FOR A PARTICULAR PURPOSE APPLICABLE TO THIS PRODUCT ARE LIMITED IN DURATION TO THE PERIOD OF COVERAGE OF THE APPLICABLE LIMITED WARRANTIES SET FORTH ABOVE. Some States do not allow limitations on how long an implied warranty lasts, so the above limitation may not apply to you.

How Does State Law Affect Warranty Coverage?

This warranty gives you specific legal rights. You may also have other rights which vary from state to state.

Troubleshooting

Fan Doesn't Work

- Make sure power switch is on.
- Check the circuit breaker to ensure the power is turned on.
- Make sure the blades spin freely.
- Turn off power from the circuit breaker, then loosen the canopy and check all the connections according to the wiring diagram.

Excessive Wobbling

- Make sure the blades are properly installed on the blade iron posts.
- Turn the power off, support the fan carefully, and check that the hanger ball is properly seated.

Remote Control of Fan is Erratic

- Make sure the battery is installed correctly.
- Install a fresh battery.

Remote Only Works Close to Fan

- Change battery.

Noisy Operation

- Make sure the blades are properly installed.
- Check to see if any of the blades are cracked. If so, replace all of the blades.

Multiple Remote Issues

- If you have multiple remotes or multiple remote-controlled fans installed on the same circuit breaker and you are experiencing interference or faulty operation of your remote controls, please go to www.HunterFan.com/FAQs and click "How do I properly install multiple remote-controlled fans?" for information on how to correct this issue.

Hunter Pro Tip:

Cleaning the Fan
Use soft brushes or cloths to prevent scratching. Cleaning products may damage the finishes.

Downrod

If you need a different downrod length follow these steps:

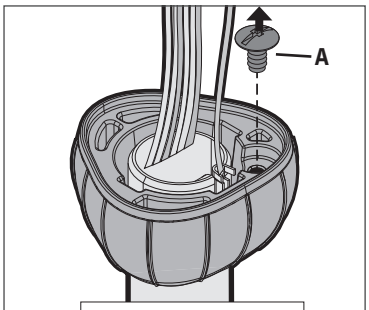

Remove ball screw (A).

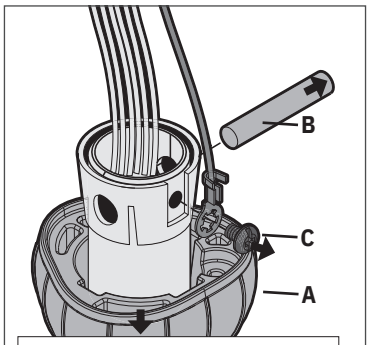

Slide ball down (A), remove small metal pin (B) and ground screw (C).

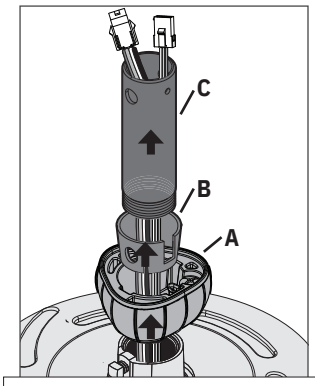

Remove ball (A), inner sleeve (B) and downrod (C) from fan body and wiring harnesses.

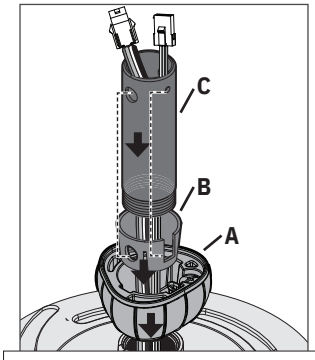

Route wiring harnesses from the fan through the accessory downrod (C). Slide inner sleeve (B) and ball (A) over downrod. Make sure to align the holes for the sleeve (B) and downrod (C).

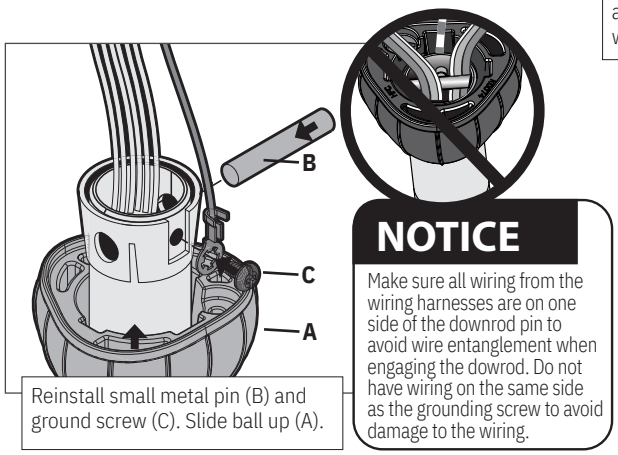

Reinstall small metal pin (B) and ground screw (C). Slide ball up (A).

NOTICE

Make sure all wiring from the wiring harnesses are on one side of the downrod pin to avoid wire entanglement when engaging the dowrod. Do not have wiring on the same side as the grounding screw to avoid damage to the wiring.

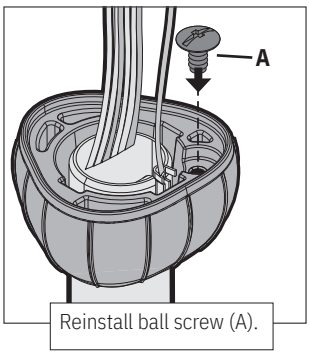

Reinstall ball screw (A).

For ceilings over 10 feet, purchase a DC wire extension kit and downrod online.

⚠ WARNING

FAN FALL HAZARD

To prevent SERIOUS INJURY or DEATH:

- ALWAYS follow the downrod assembly instructions exactly.
- VERIFY the downrod is assembled correctly by firmly pulling on the hanger ball.
- Pin must be reinserted to secure downrod assembly.