Hall Tree

Assembly Instructions - Please keep for future reference

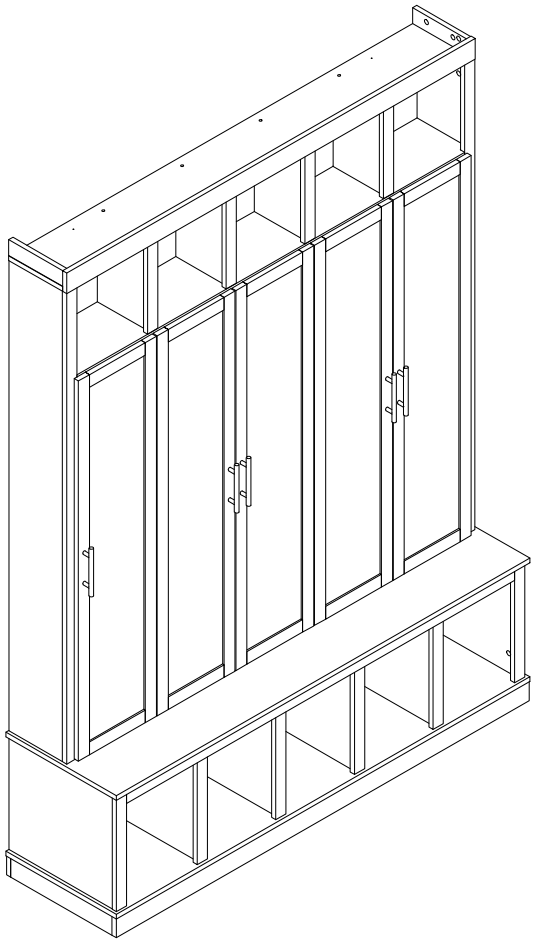

Dimensions
Width- 59.05inch
Depth- 15.75inch
Height- 78.74inch



Important – Please read these instructions fully before starting assembly

Safety and Care Advice

Important – Please read these instructions fully before starting assembly

• Check you have all the components and tools listed on the following pages.

• Remove all fittings from the plastic bags and separate them into their groups.

• Keep children and animals away from the work area, small parts could choke if swallowed.

• Make sure you have enough space to layout the parts before starting.

• During assembly do not stand or put weight on the product, this could cause damage.

• Assemble the item as close to its final position (in the same room) as possible.

• Assemble on a soft level surface to avoid damaging the unit or your floor.

• Parts of the assembly will be easier with 2 people.



• To reduce the likelihood of damaging your product please ensure that your power drill is set on a low torque setting.

Care and maintenance

• Only clean using a damp cloth and mild detergent, do no use bleach or abrasive cleaners.

• From time to time check that there are no loose screws on this unit.

• This product should not be discarded with household waste. Take to your local authority waste disposal centre.

Handy Hints

• Assemble all parts and bolts loosely during assembly, only once the product is complete should you fully tighten the bolts

• Regularly check and ensure That all bolts and fittings are tightend properly.

WARNING
In order to help prevent overturning – please follow these instructions

To help prevent product toppling over please follow the below steps:-

Use the anti tip stap or wall fixing method provided (if applicable)
Do not allow children to climb or hang on the furniture
Do not open more than one drawer at a time
Do not place heavy items in the top drawers
Do not place heavy items on top of the furniture, unless the furniture has been designed for this purpose

Components - Fittings

Please check you have all the panels listed below

Note:The quantitie below are the correcet amount to complete the assembly. In some cases more fittings may be supplied than are required.

N724P446728

A 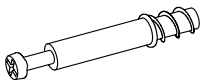 Cam Bolt ×129+2	B 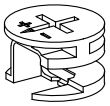 Cam Bolt ×129+2	C 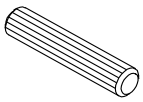 6*30mm Dowel ×79+2	D 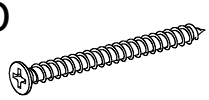 4*40mm Screw ×36+2
E 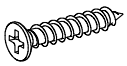 3*12mm Screw ×10+2	F 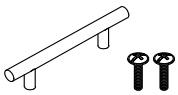 4*18mm Bar Handle ×5set	G  Coat Hook ×5	H 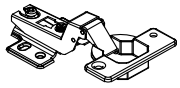 Door Hinge ×15
I 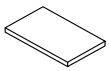 Felt Pad ×10+1	J 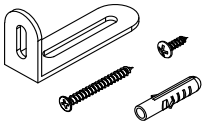 Anti-tip Device ×2set	K 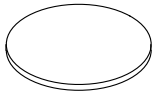 Hole Cover ×48+2	L 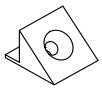 Back Panel Clip ×8+1
M 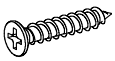 3.5*14mm Screw ×98+2	N 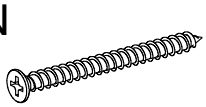 4*30mm Screw ×12+1	O 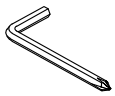 Allen key ×2	

Tools required Not Included

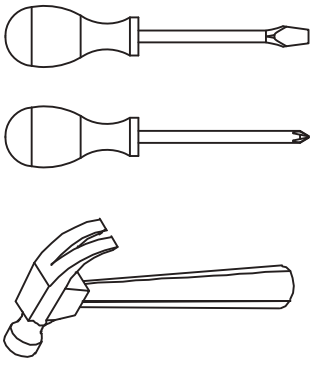

Phillips screwdriver
(medium & large)

Using Camlocks

Step 1

Connect the male camlock as diected in the assembly instructions using a scewdriver.

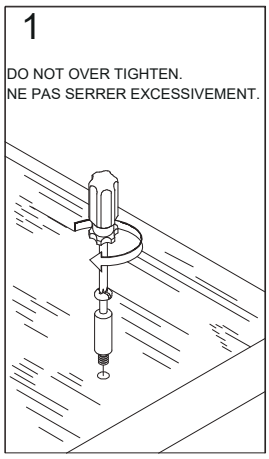

Step 2

Push the male camlock into the entry hole.

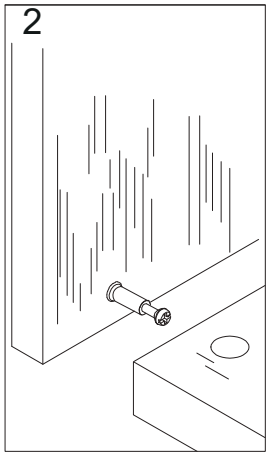

Step 3

Insert the female camlock as shown in the instruction.

Note：ensure that the arrow on the top of the camlock points towards the entry hole for the male camlock.

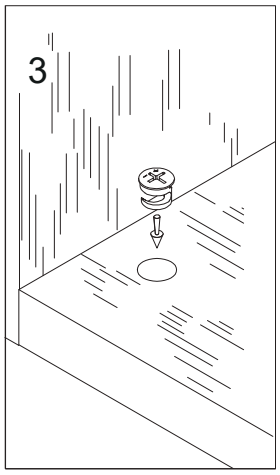

Step 4

Turn the female camlock clockwise with a screwdriver.

You should feel a click when the camlock is locked in place.

The joint is now secure.

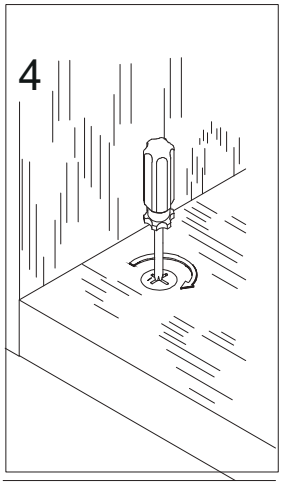

Assembly Instructions

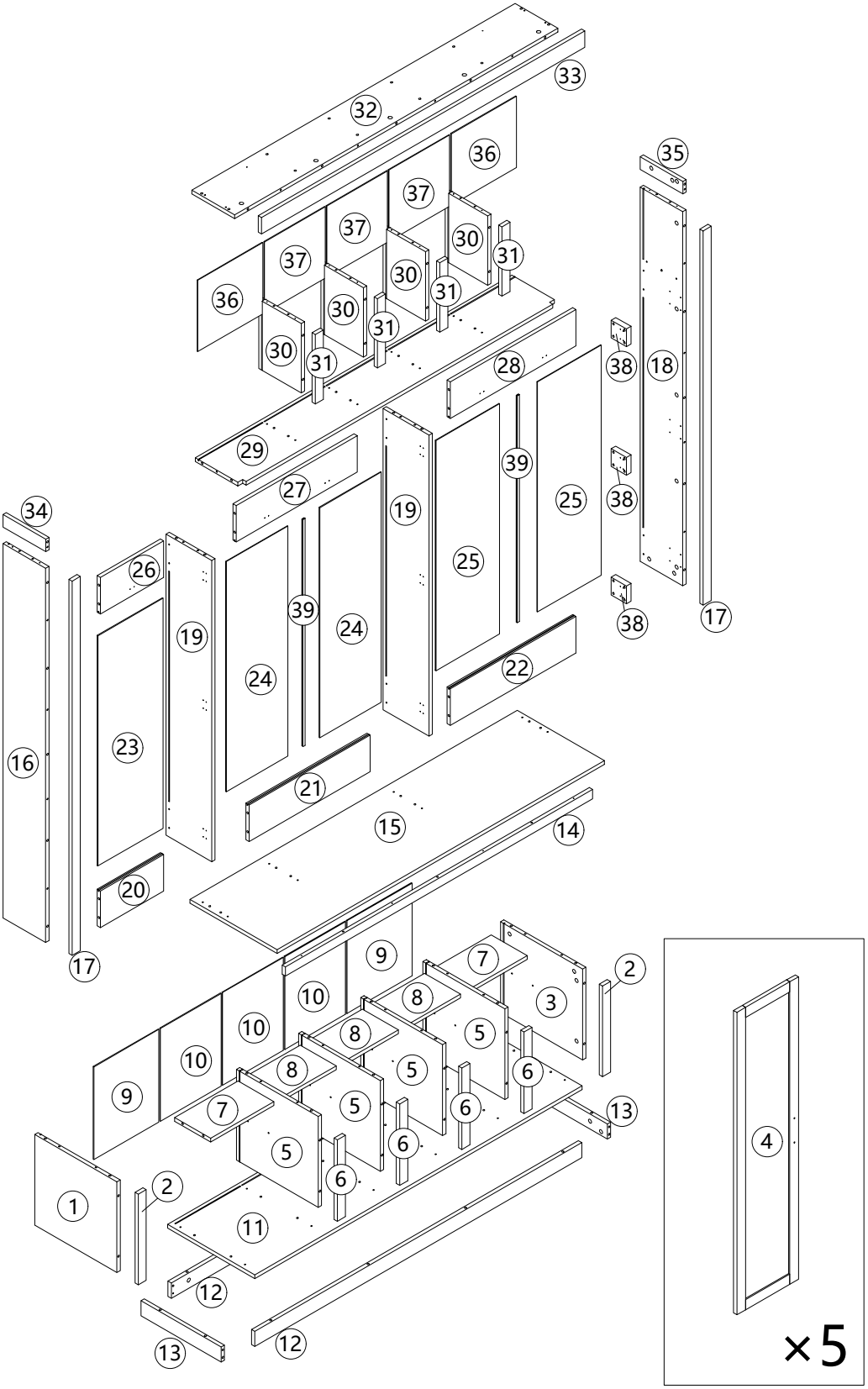

PART LIST

This product comes in 2 box.

N724P446727

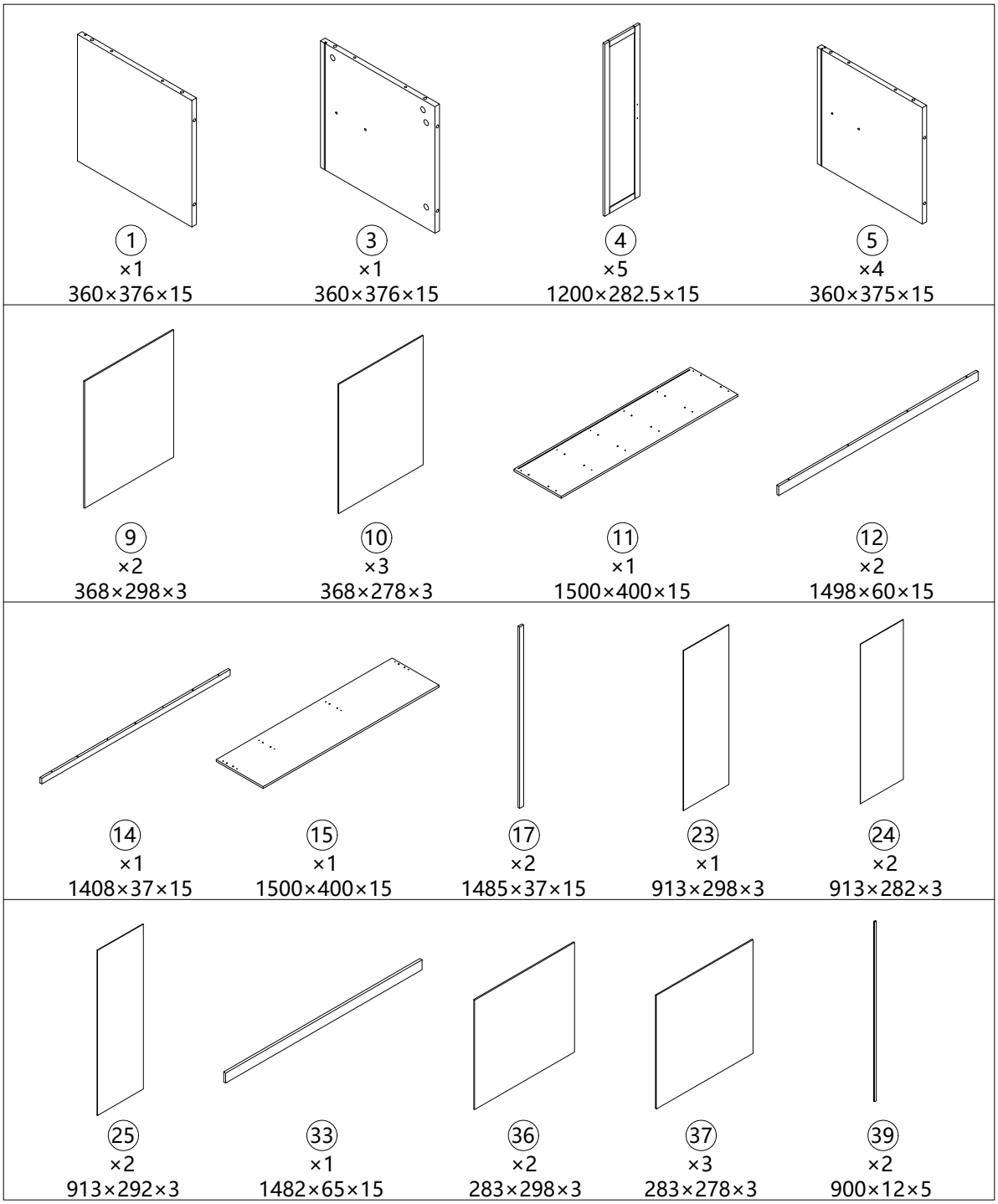

PART LIST

This product comes in 2 box.

N724P446728

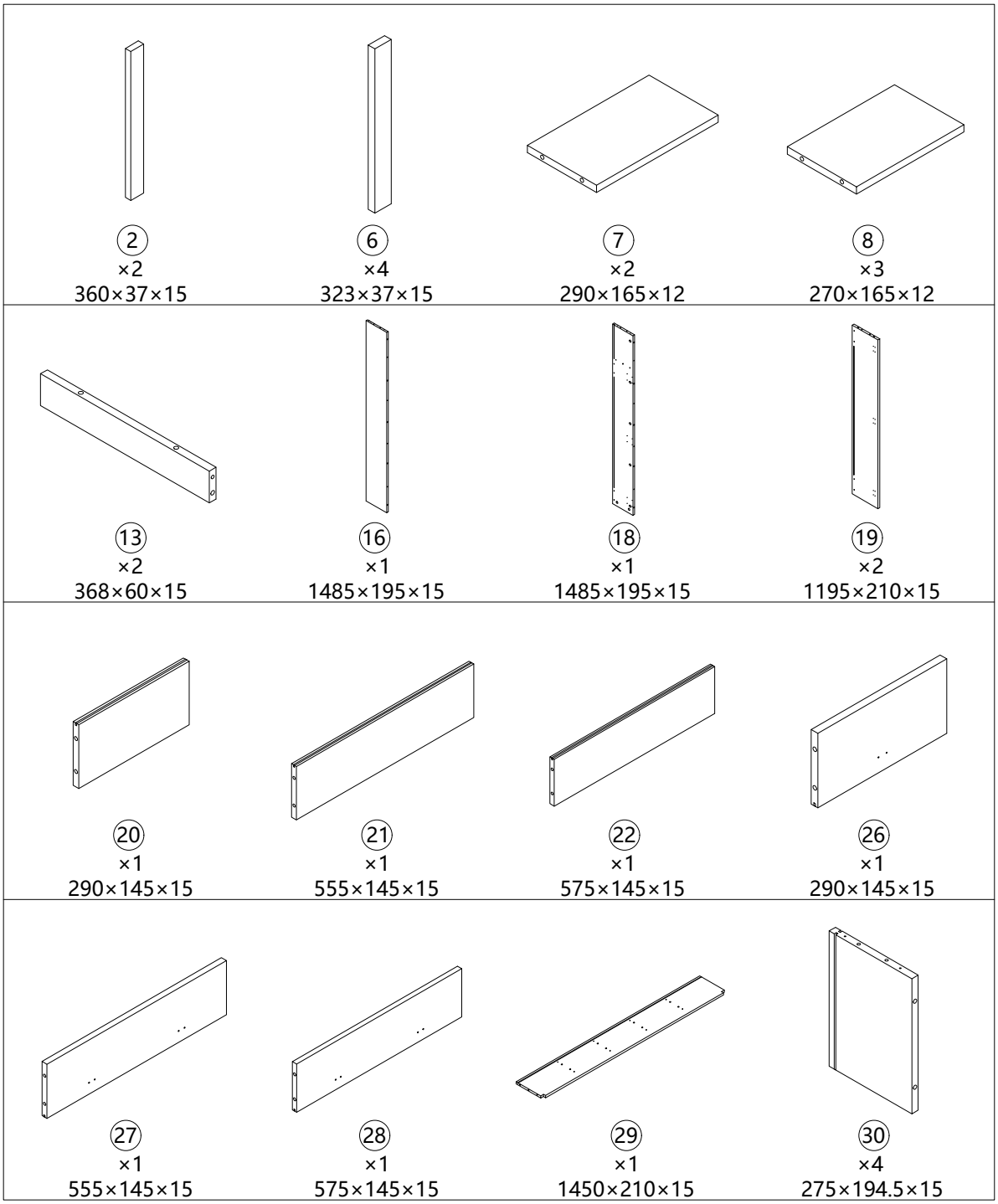

PART LIST

This product comes in 2 box.

N724P446728

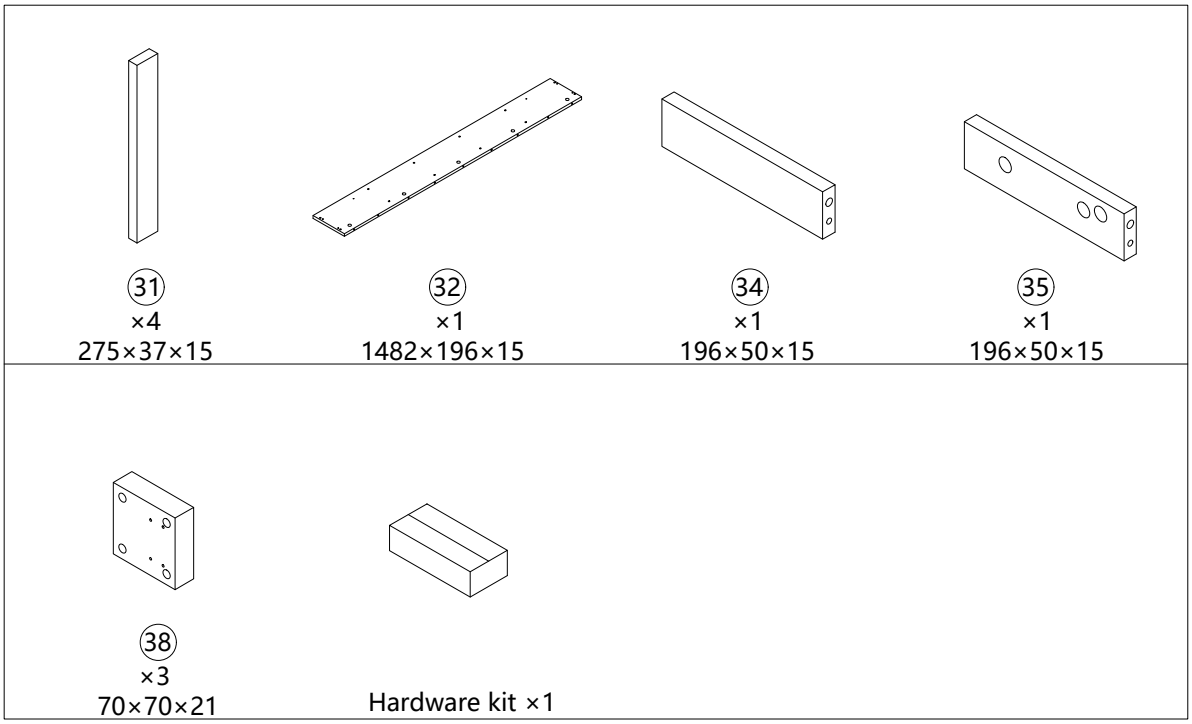

Assembly Instructions

Step 1

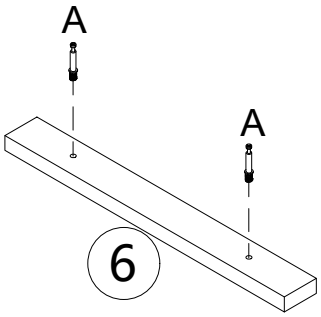

×4

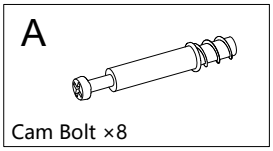

Step 2

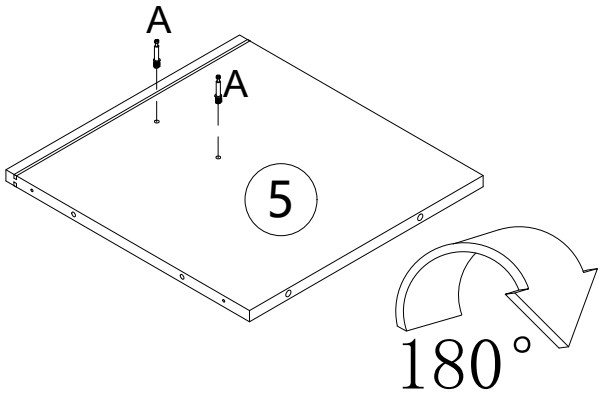

180°

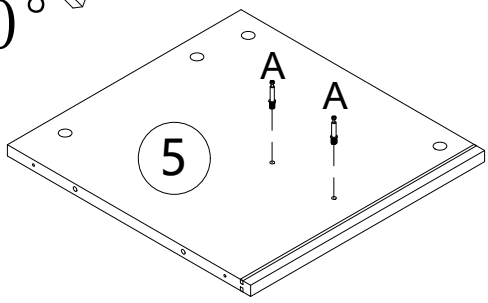

×4

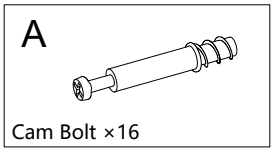

Assembly Instructions

Step 3

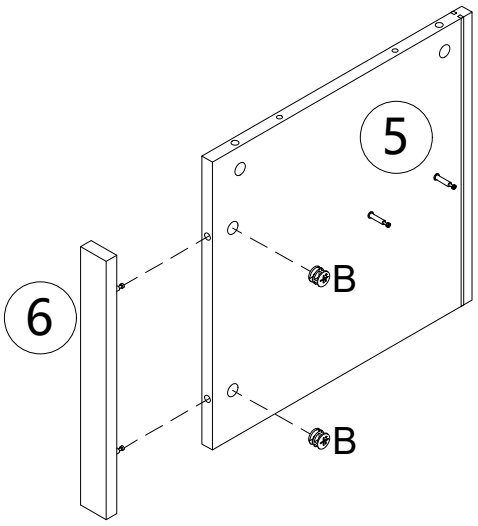

×4

B



Cam Bolt ×8

Step 4

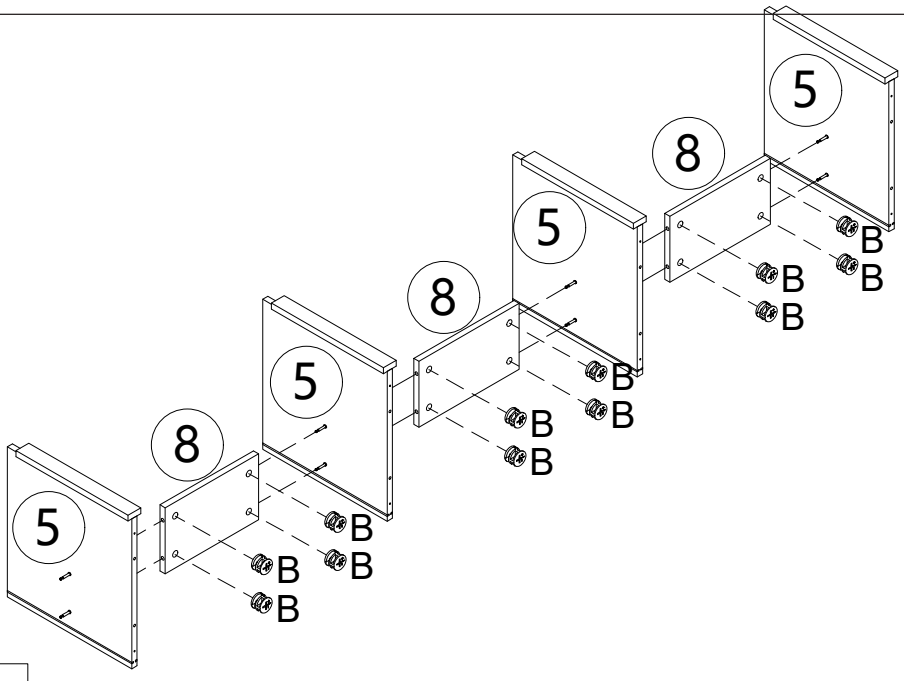

B



Cam Bolt ×12

Assembly Instructions

Step 5

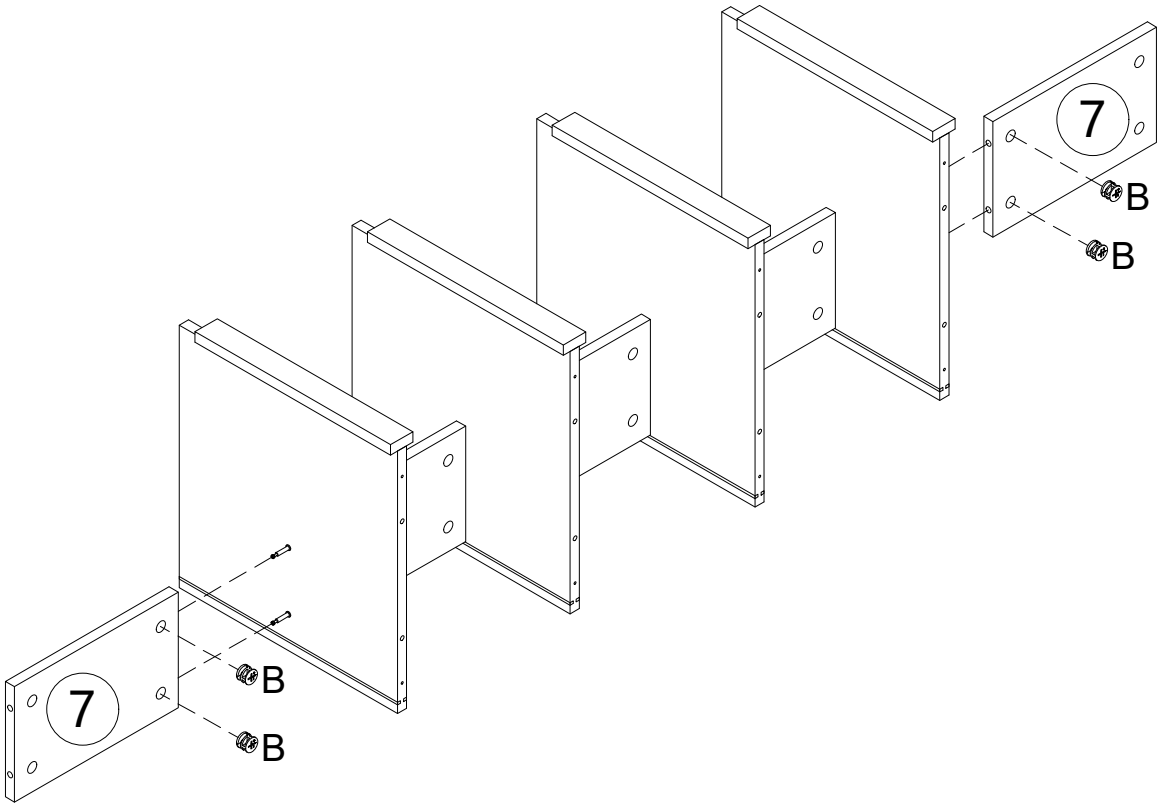

B



Cam Bolt ×4

Assembly Instructions

Step 6

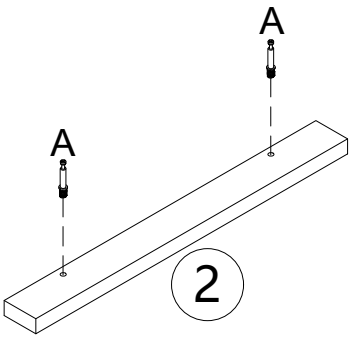

×2

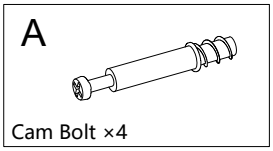

Step 7

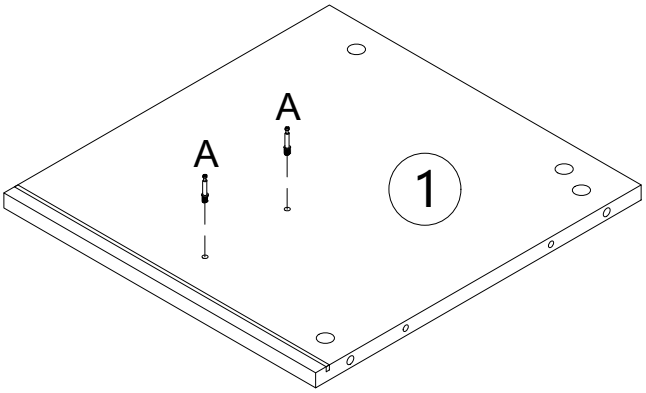

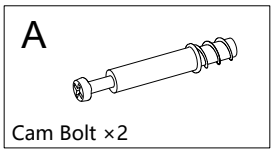

Assembly Instructions

Step 8

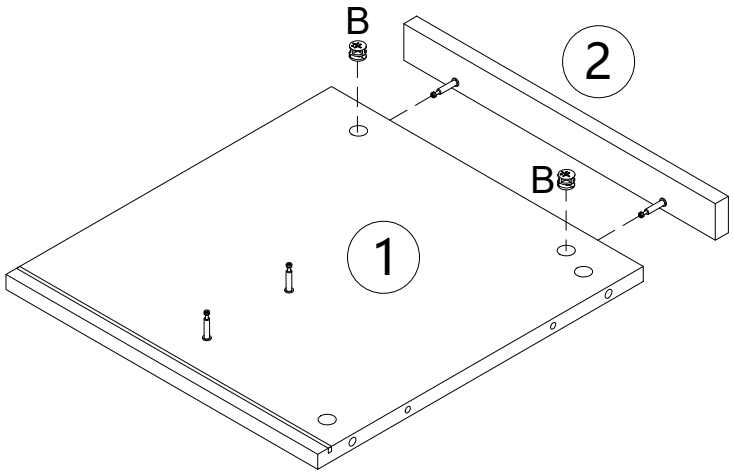

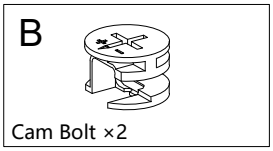

Step 9

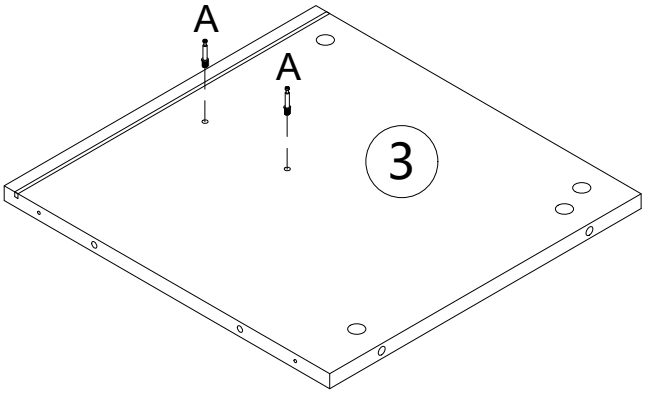

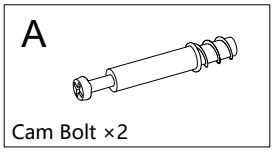

Assembly Instructions

Step 1 0

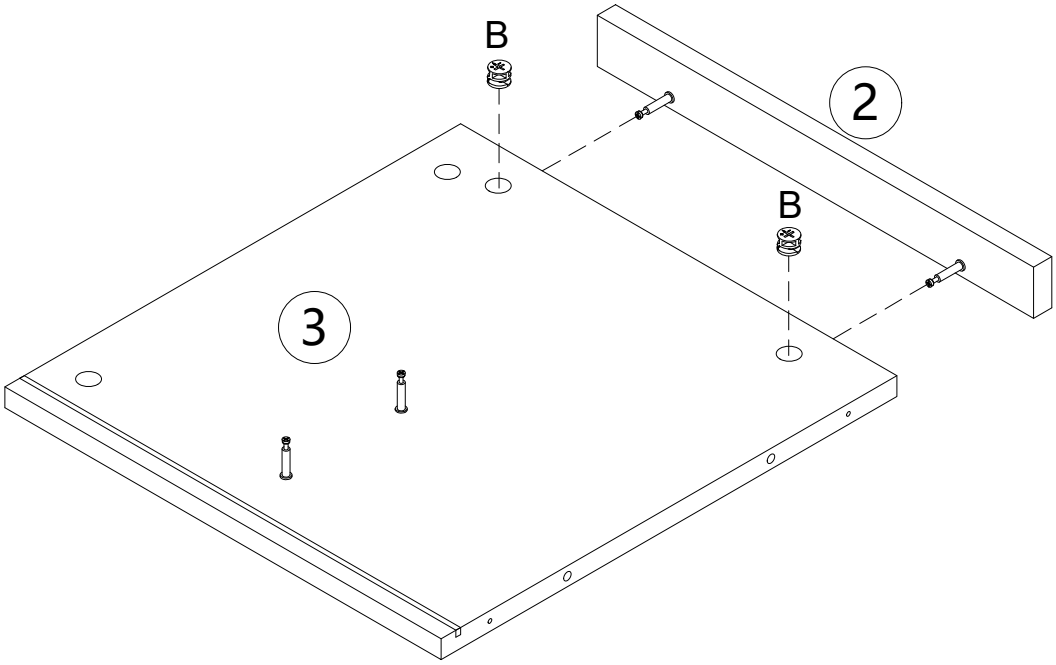

B



Cam Bolt ×2

Assembly Instructions

Step 1 1

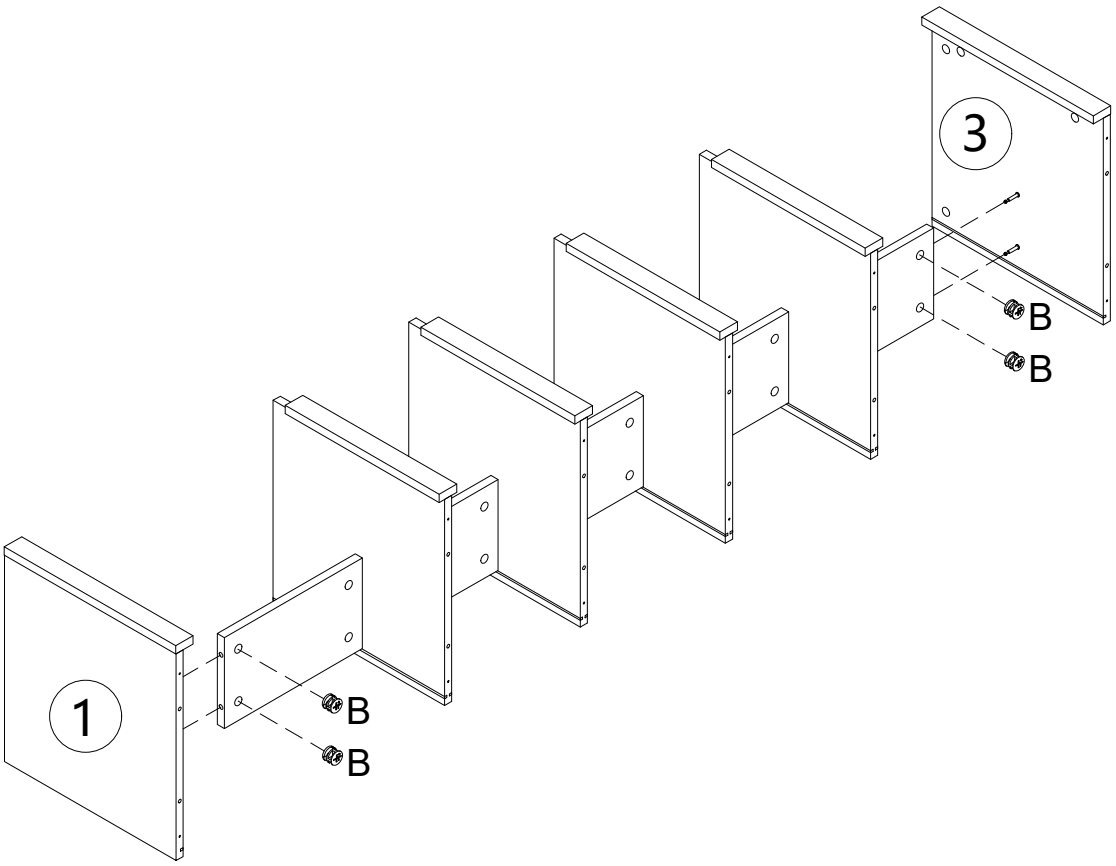

B

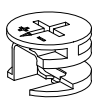

Cam Bolt ×4

Assembly Instructions

Step 1 2

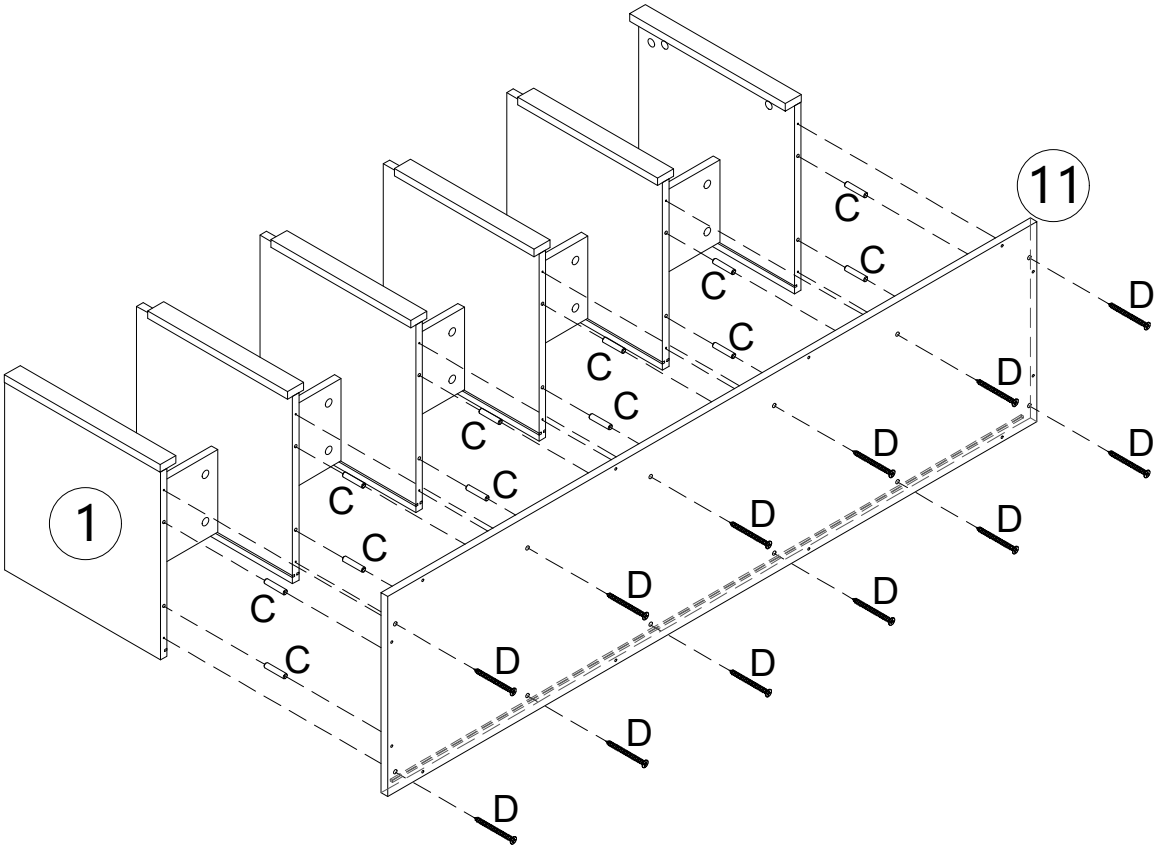

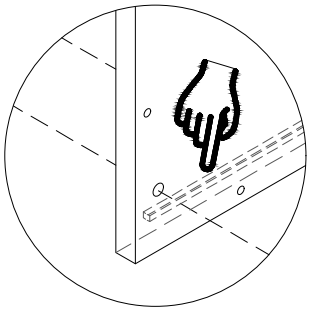

Ensure the slot faces downward.

C

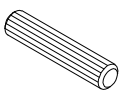

6*30mm Dowel ×12

D



4*40mm Screw ×12

Assembly Instructions

Step 1 3

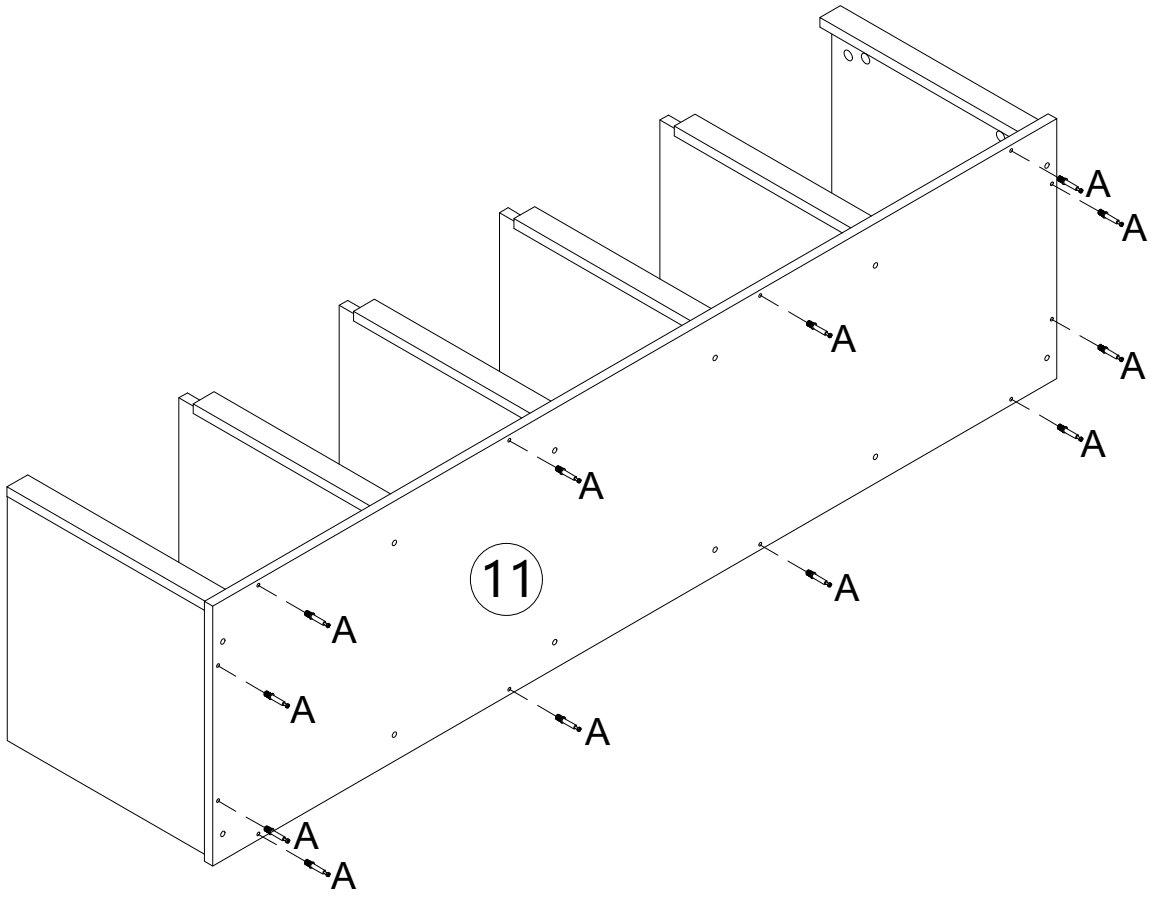

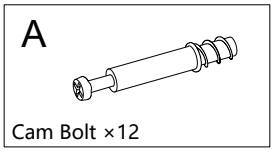

Assembly Instructions

Step 1 4

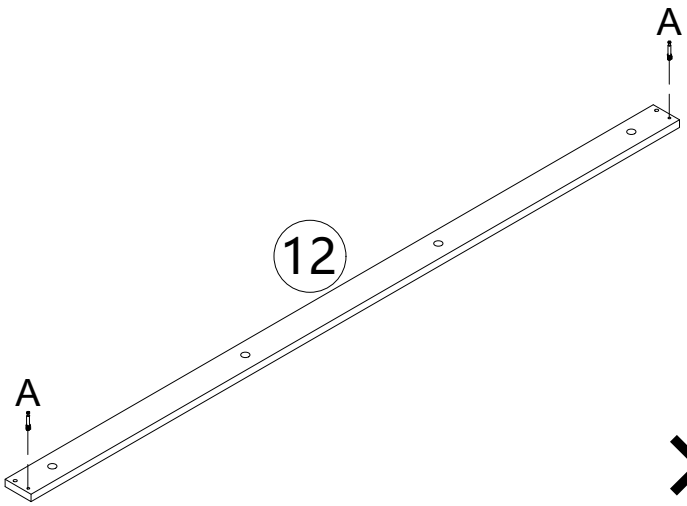

×2

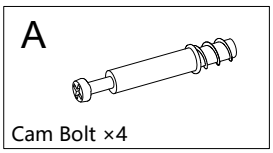

Step 1 5

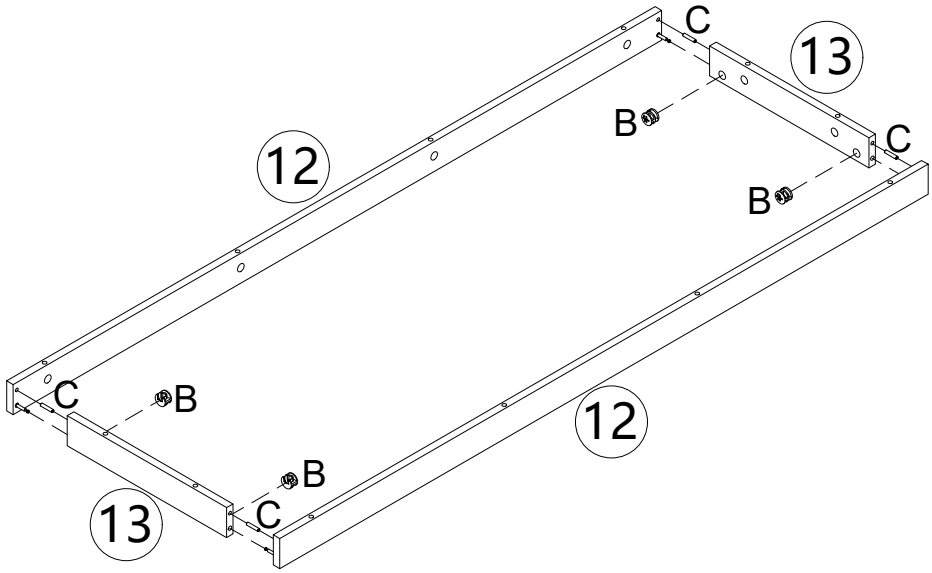

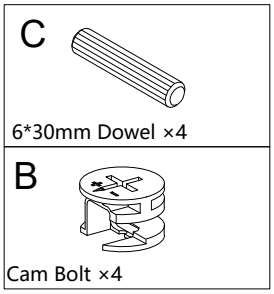

Assembly Instructions

Step 1 6

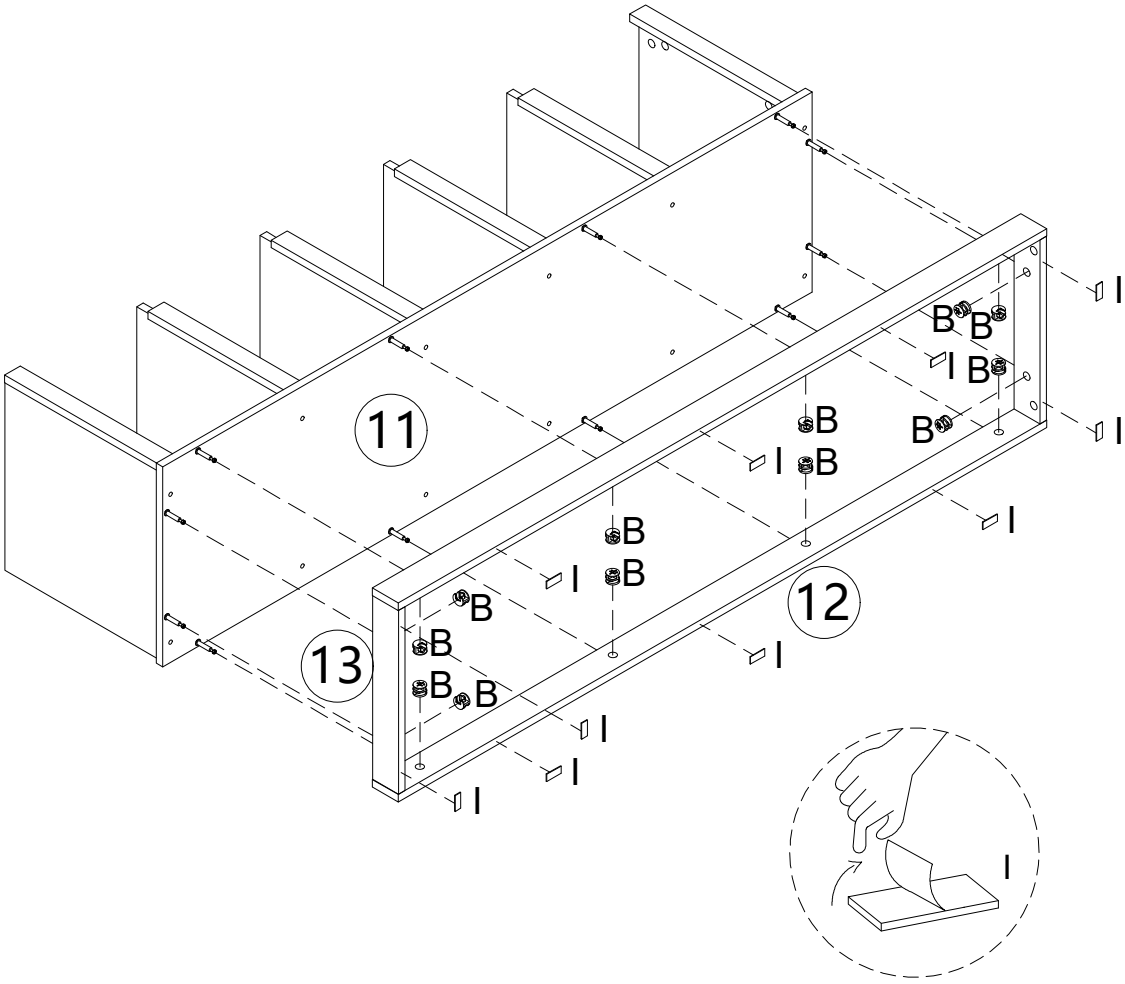

I  Felt Pad ×10	
B  Cam Bolt ×12	

Assembly Instructions

Step 1 7

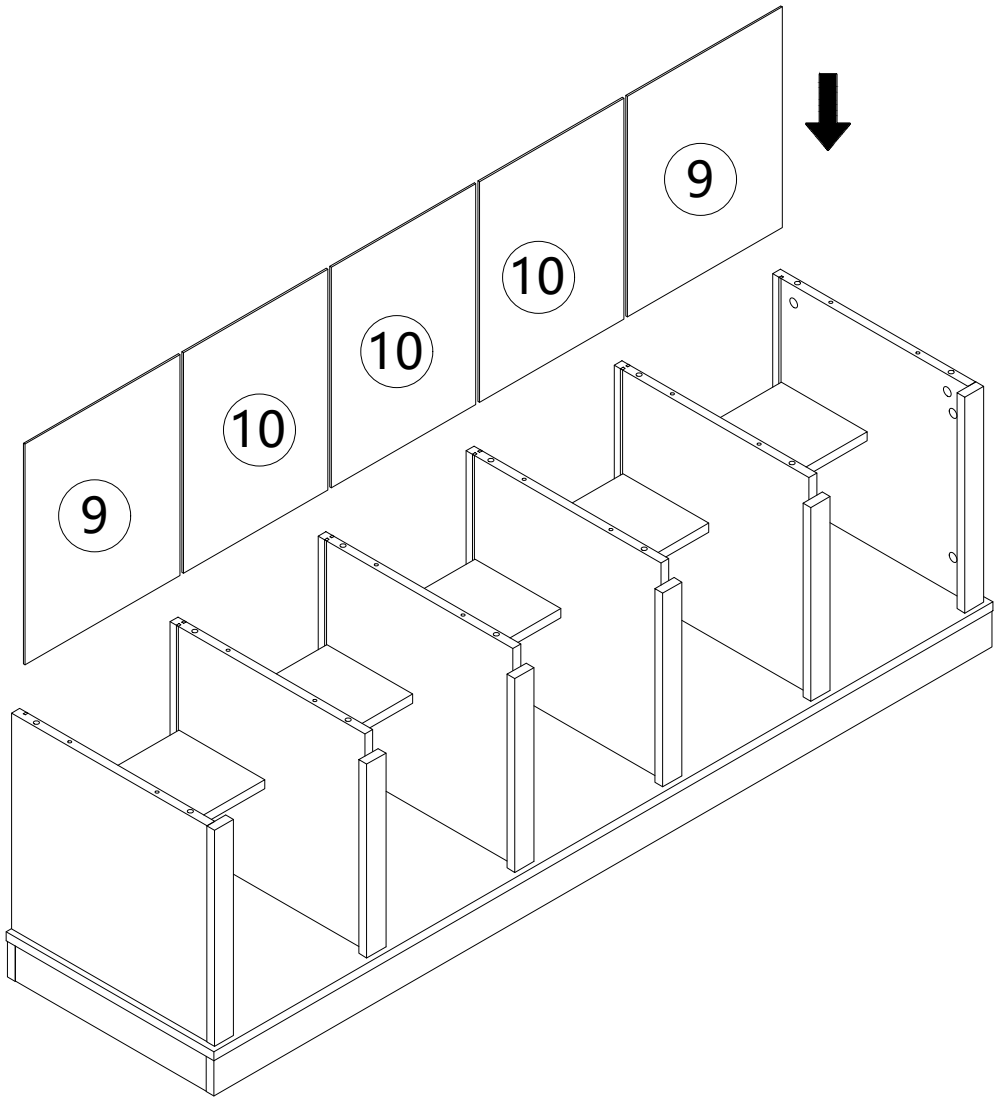

Assembly Instructions

Step 1 8

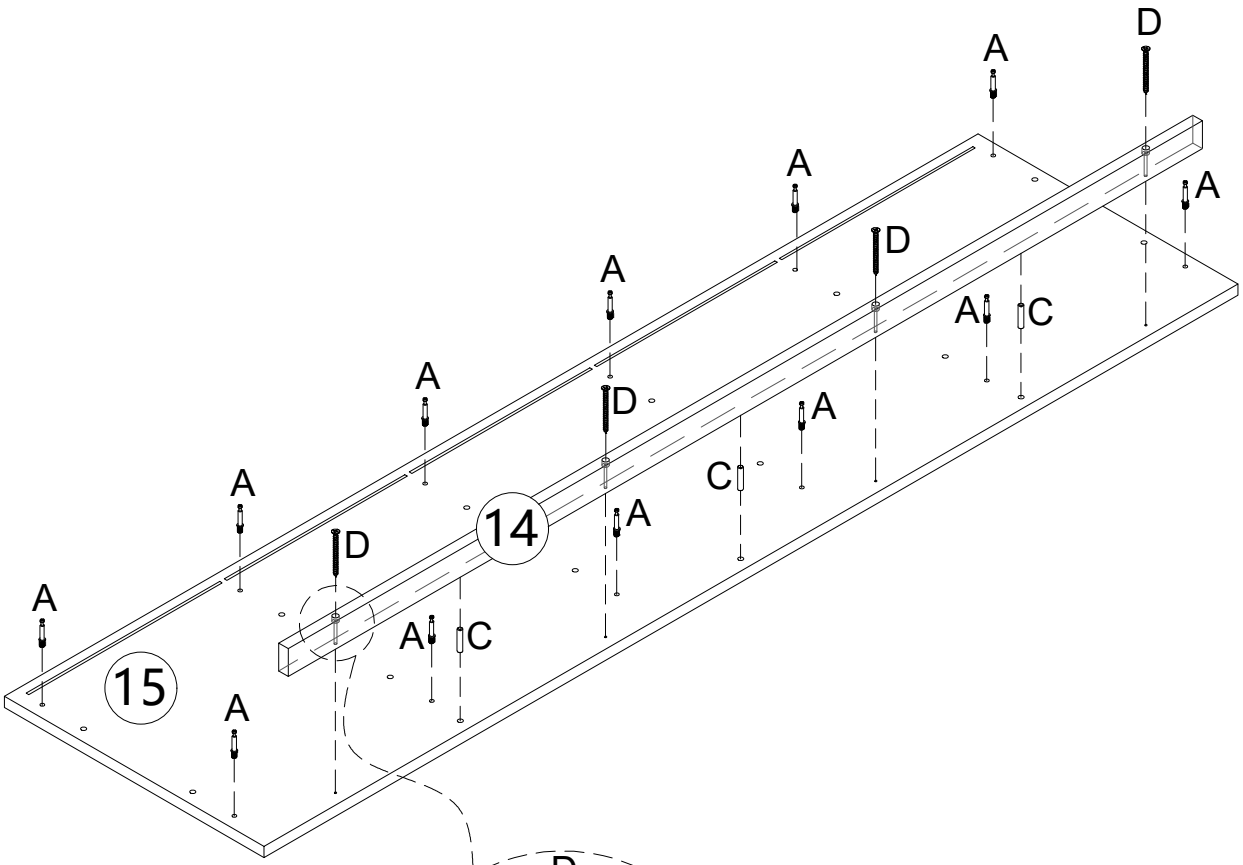

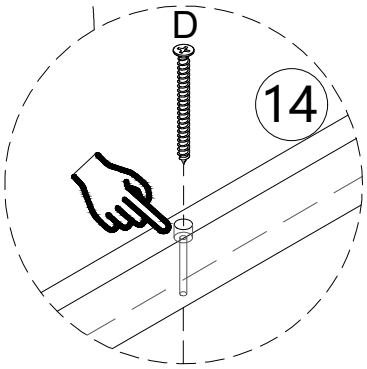

C

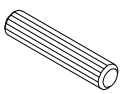

6*30mm Dowel ×3

A

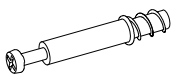

Cam Bolt ×12

D



4*40mm Screw ×4

Assembly Instructions

Step 1 9

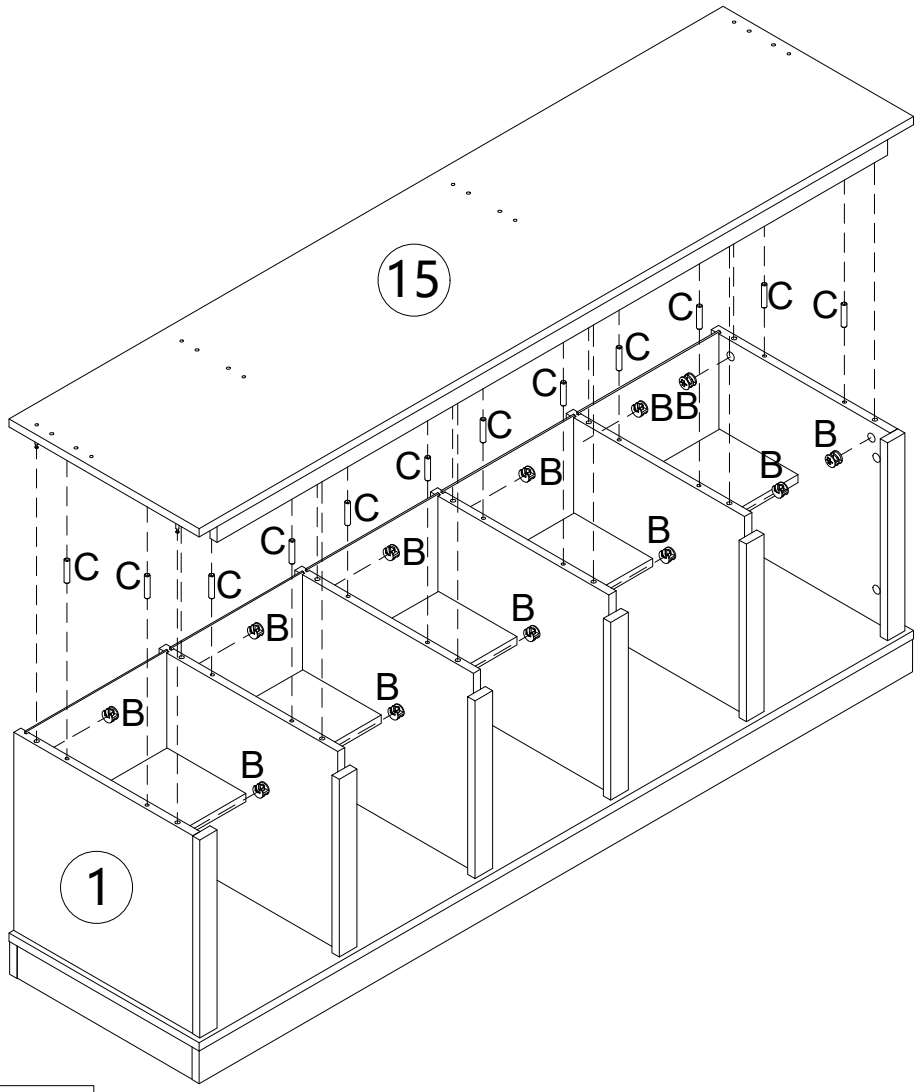

C 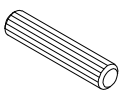 6*30mm Dowel ×12	
B 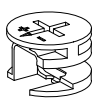 Cam Bolt ×12	

Assembly Instructions

Step 2 0

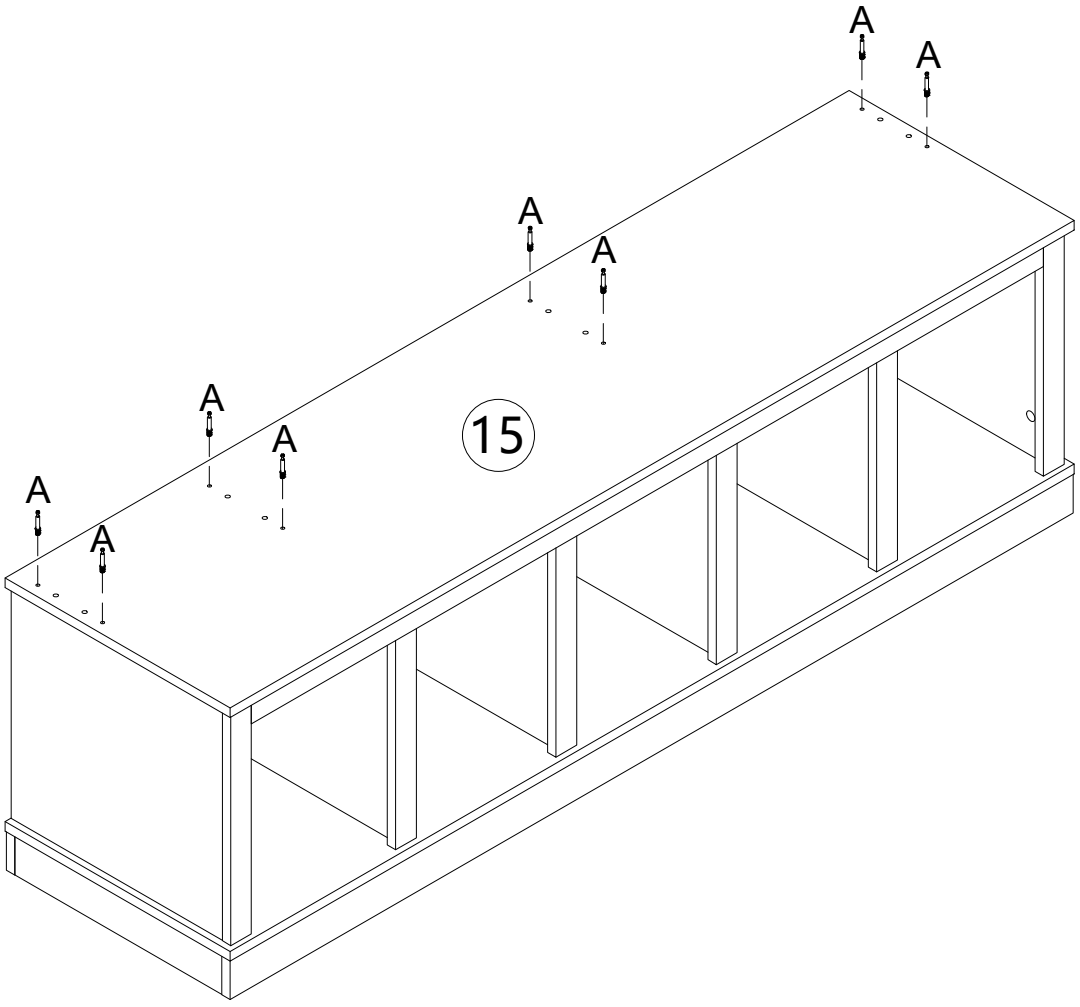

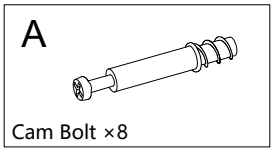

Assembly Instructions

Step 2 1

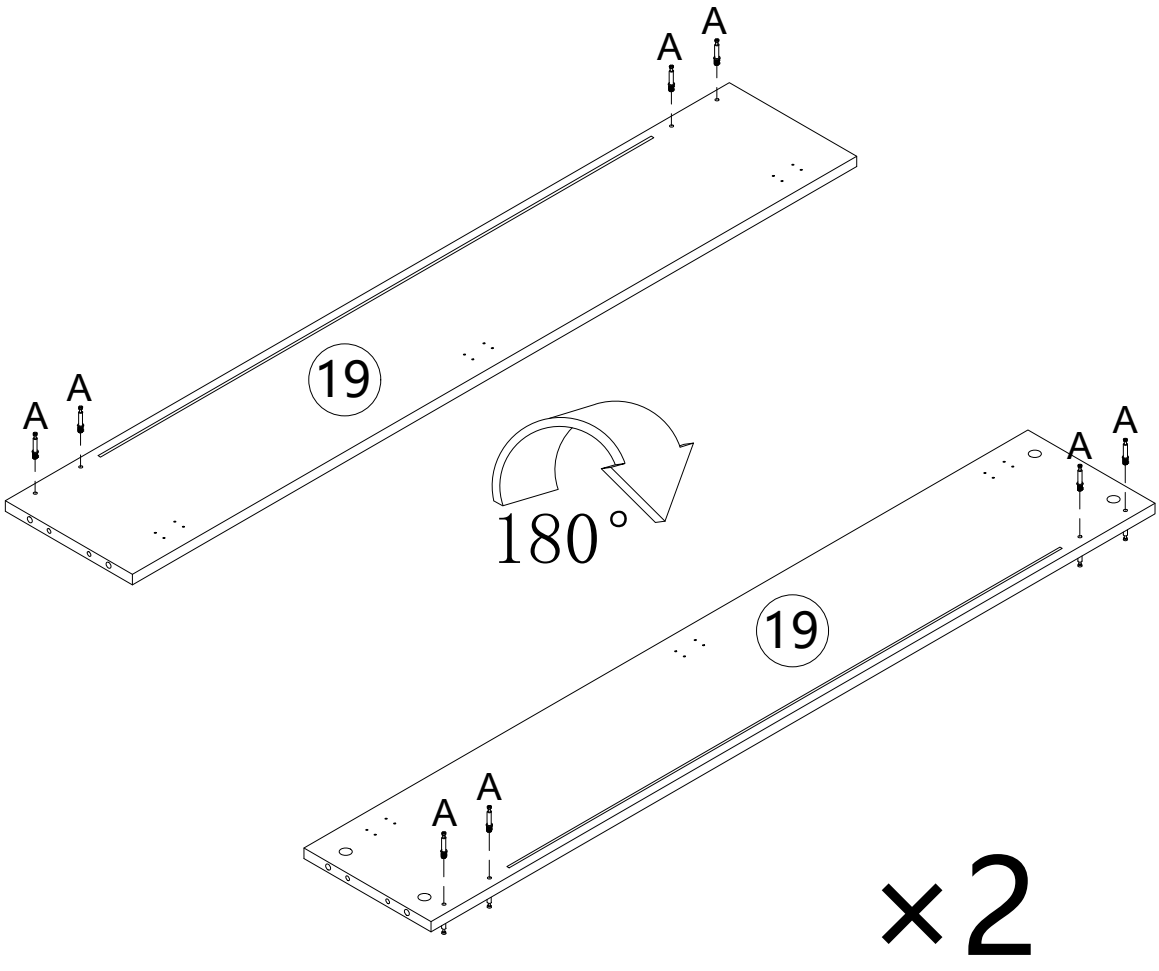

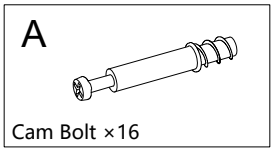

Assembly Instructions

Step 2 2

Ensure the slot is facing the correct direction.

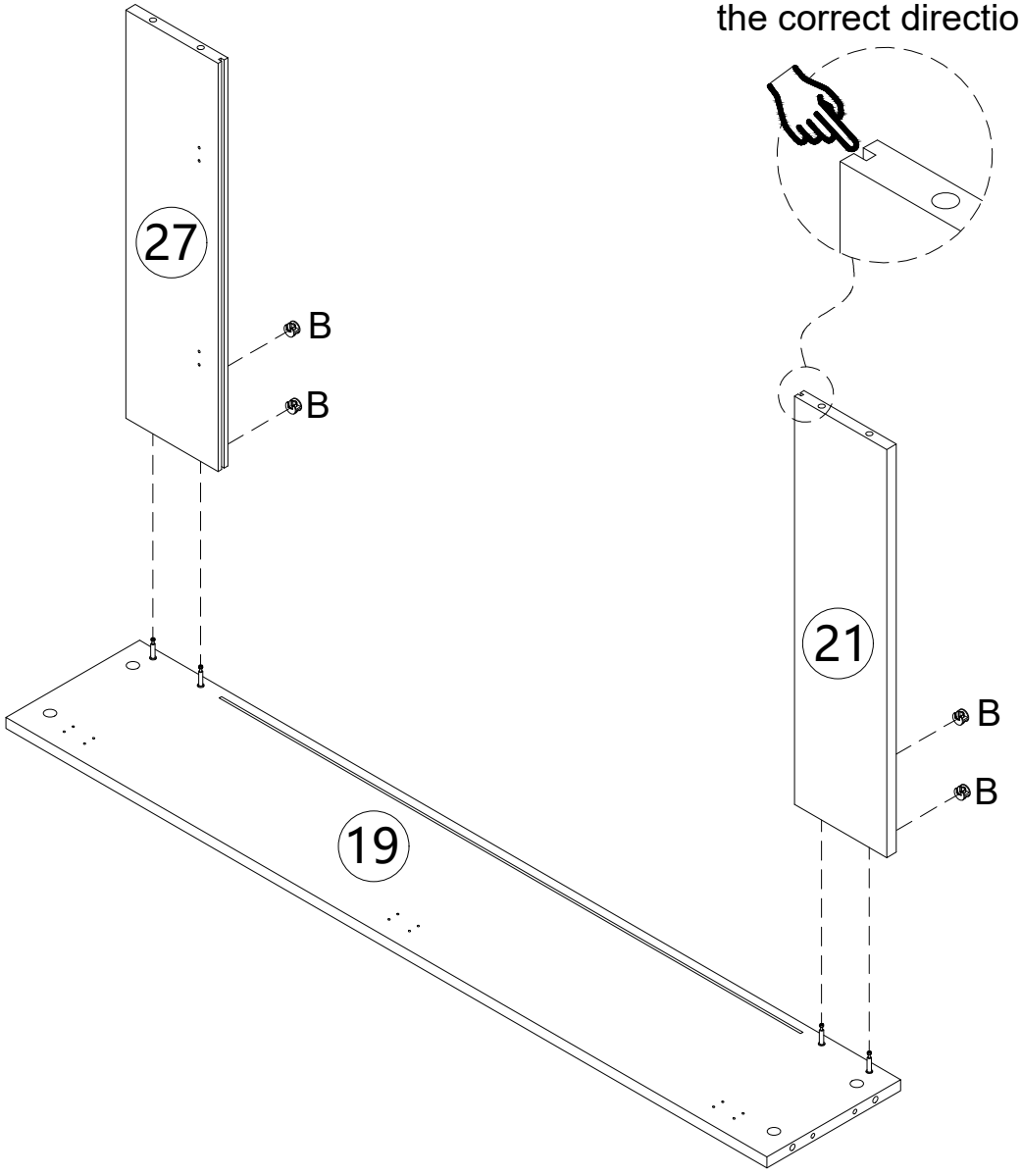

B



Cam Bolt ×4

Assembly Instructions

Step 2 3

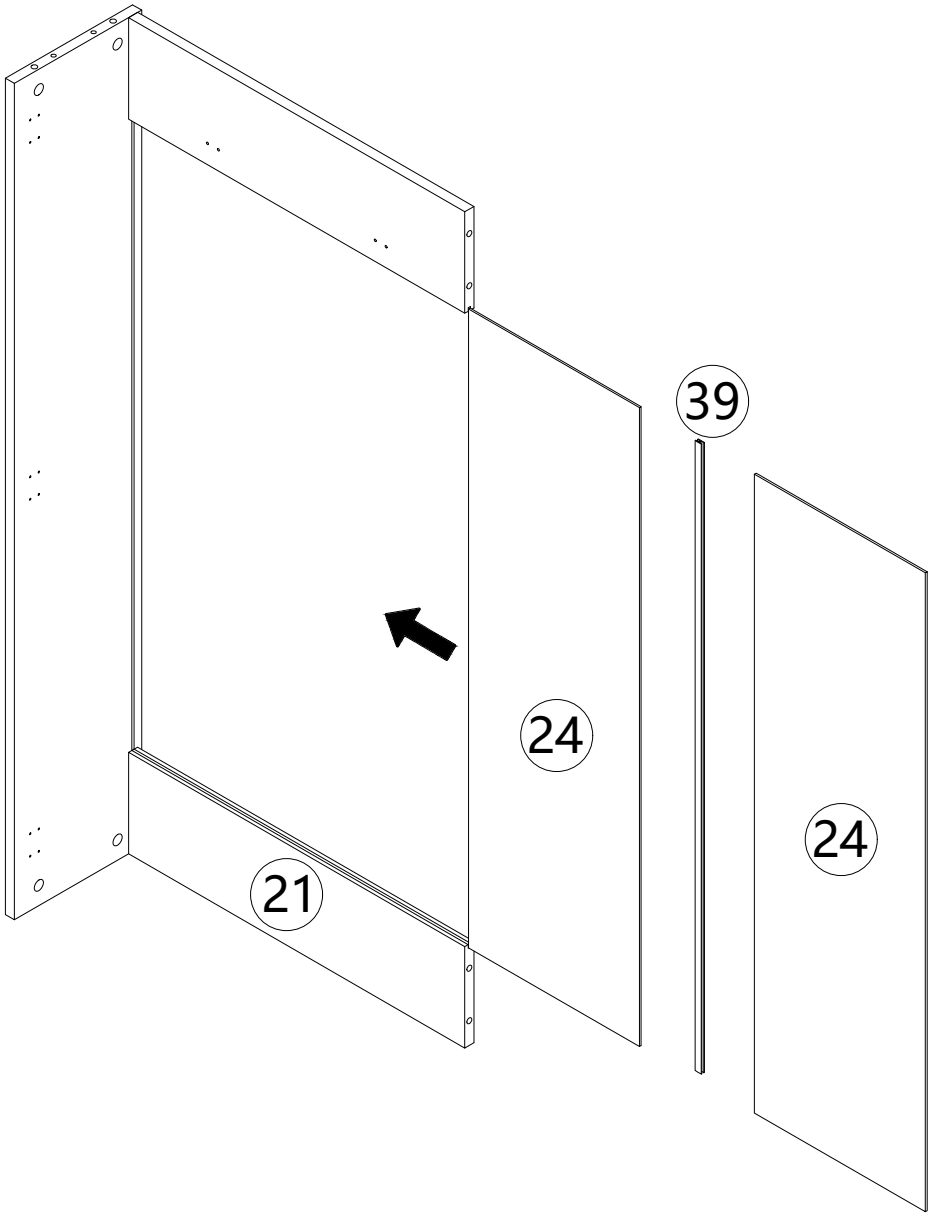

Assembly Instructions

Step 2 4

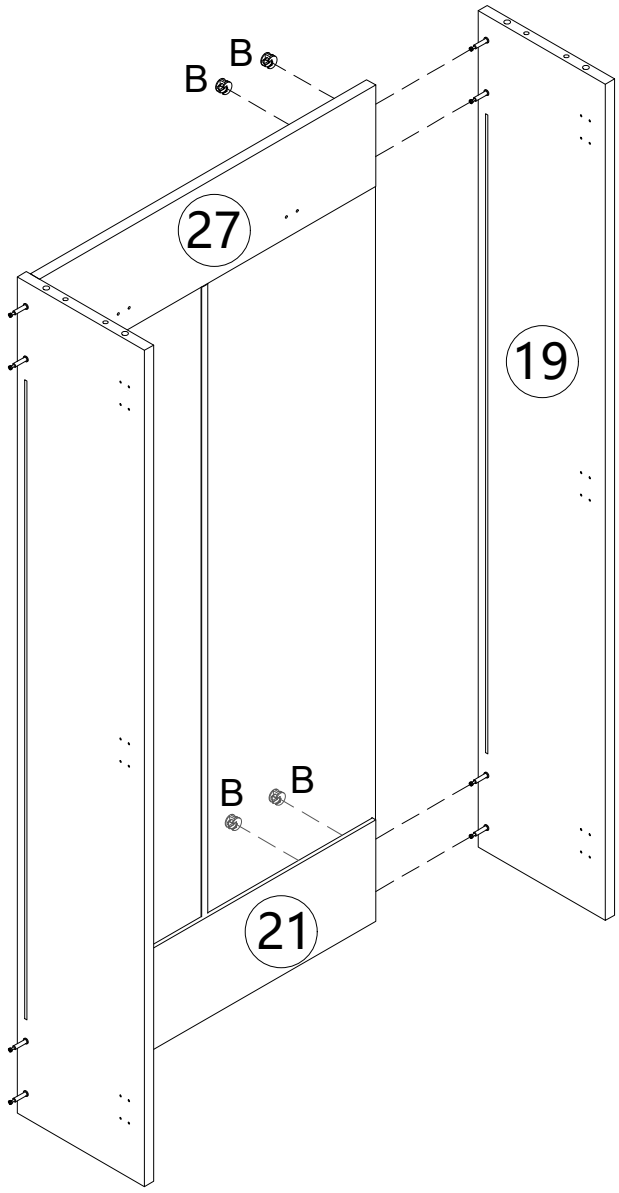

B

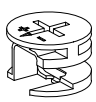

Cam Bolt ×4

Assembly Instructions

Step 2 5

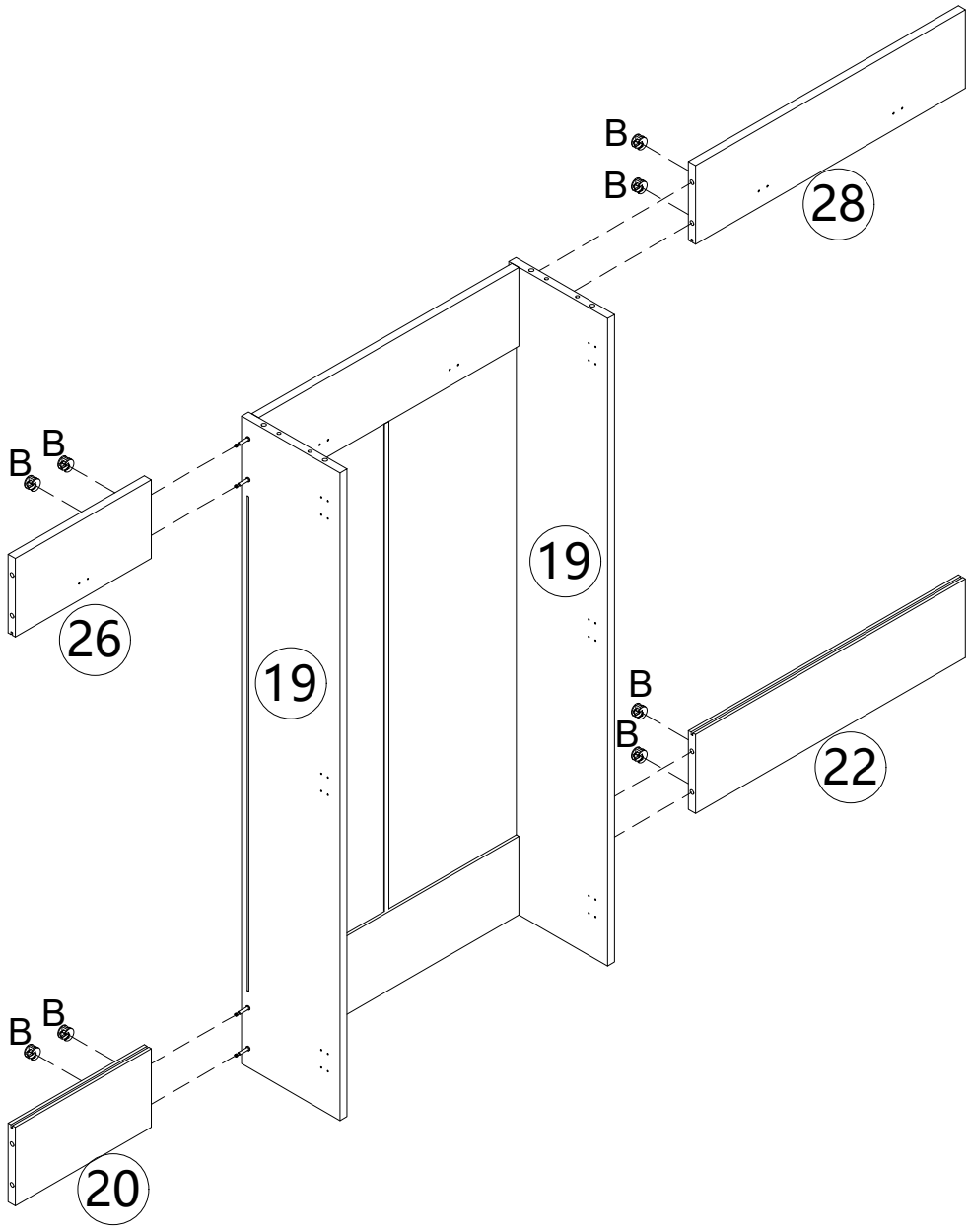

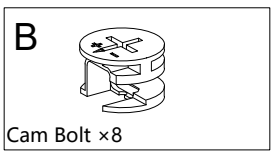

Assembly Instructions

Step 2 6

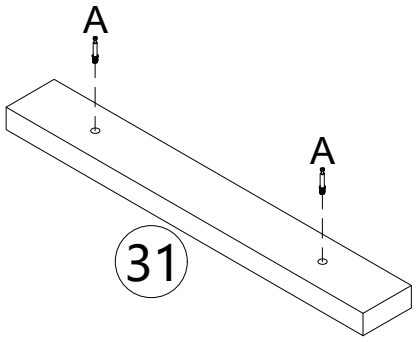

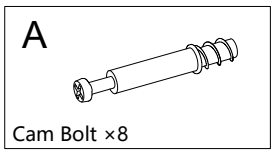

×4

Step 2 7

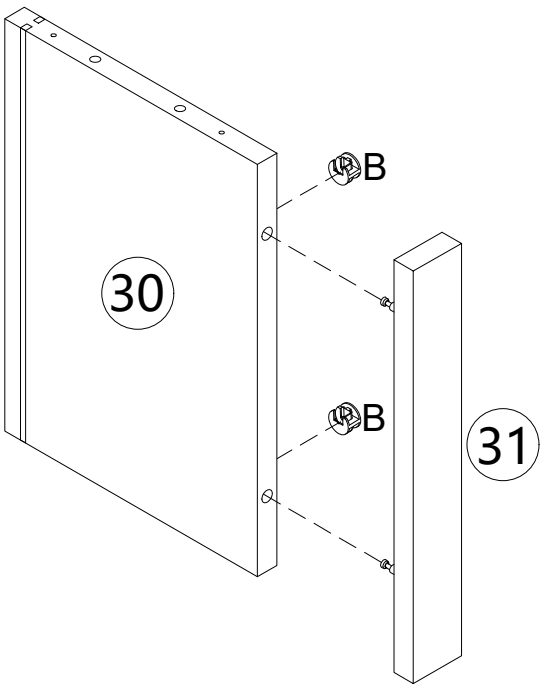

×4

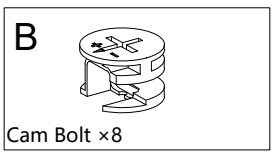

Assembly Instructions

Step 2 8

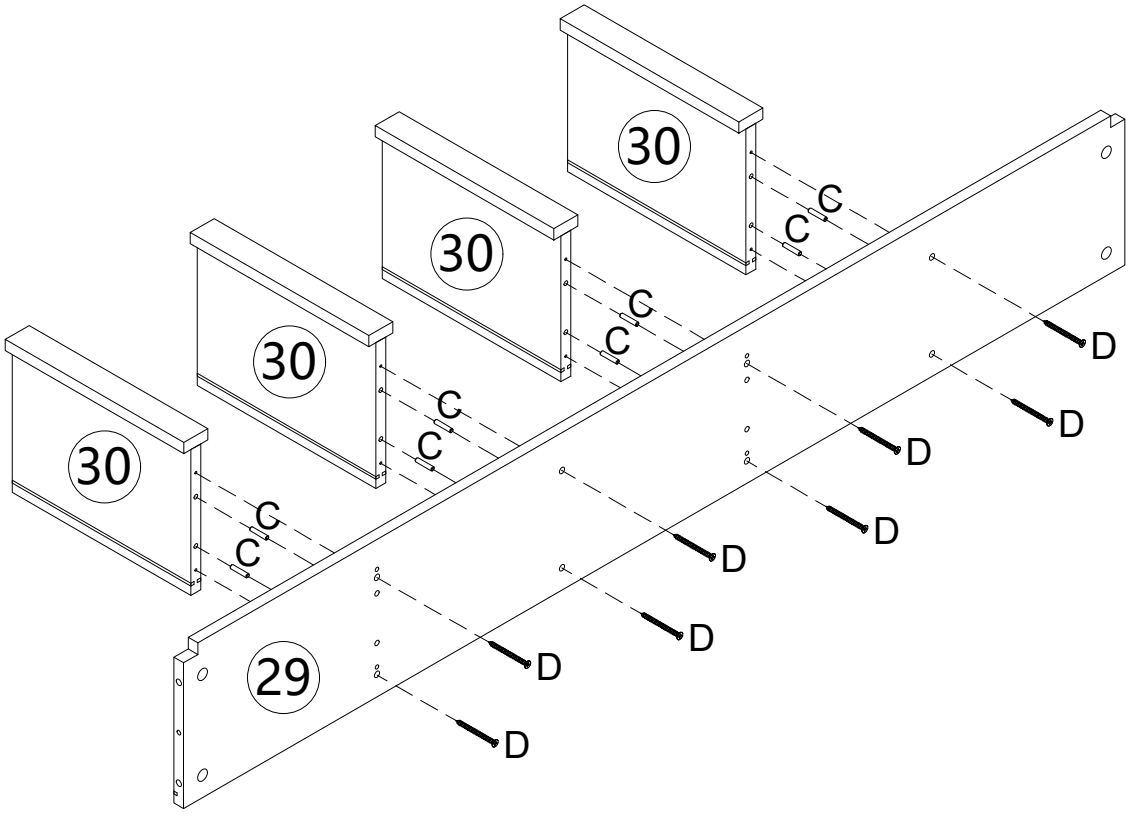

C 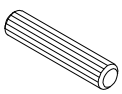	6*30mm Dowel ×8
D 	4*40mm Screw ×8

Assembly Instructions

Step 2 9

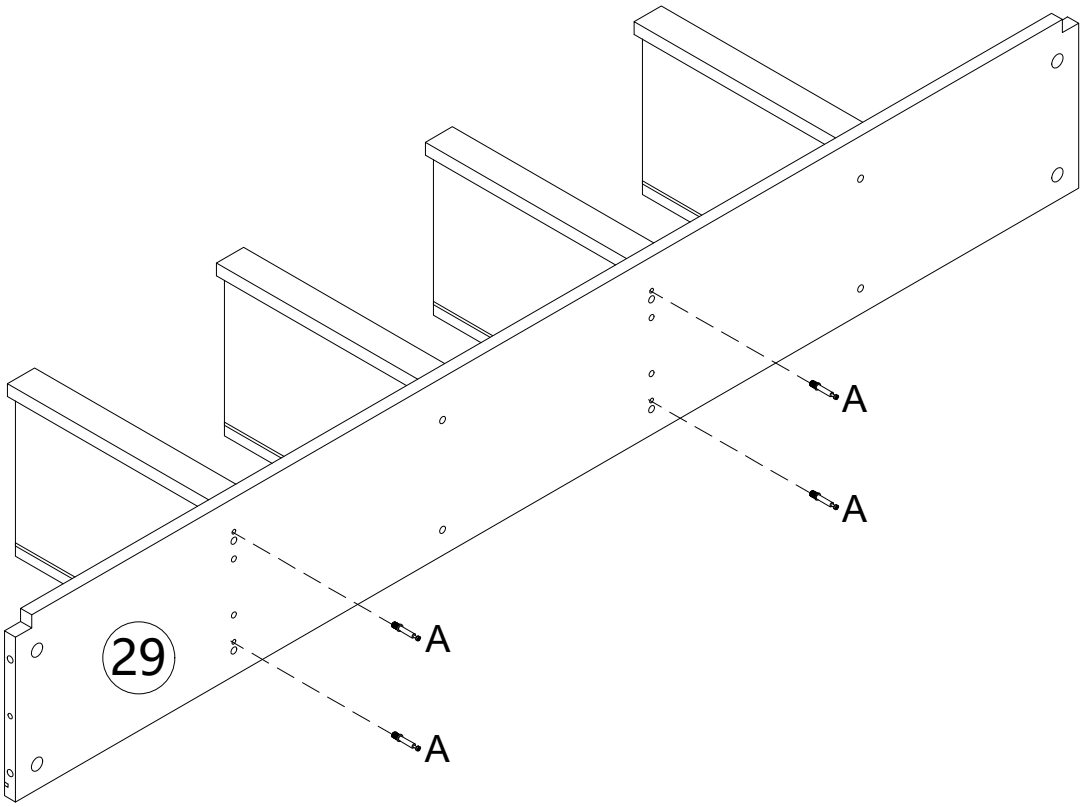

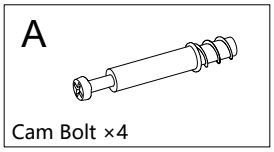

Assembly Instructions

Step 3 0

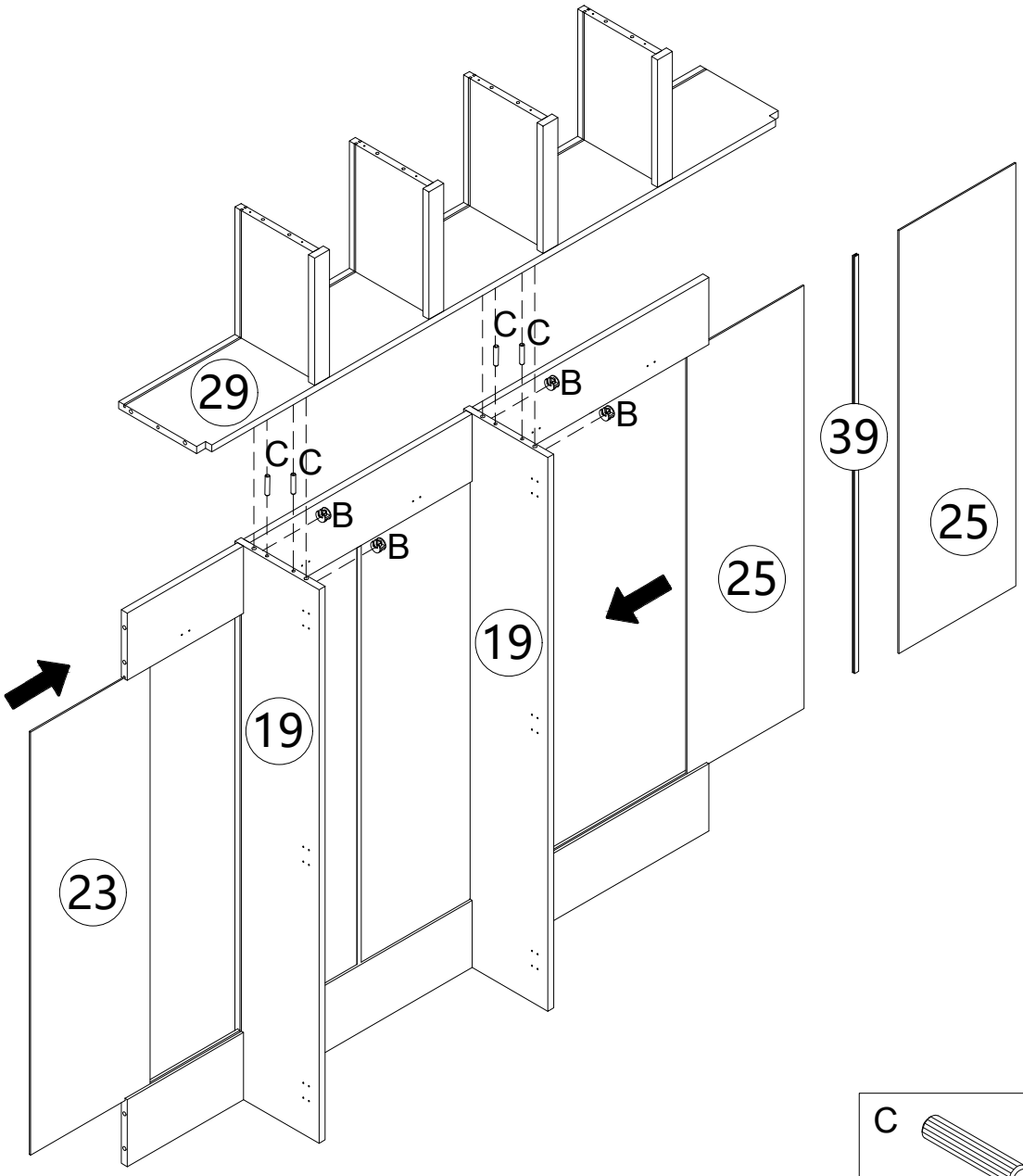

C

6*30mm Dowel ×4

B

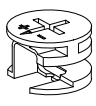

Cam Bolt ×4

Assembly Instructions

Step 3 1

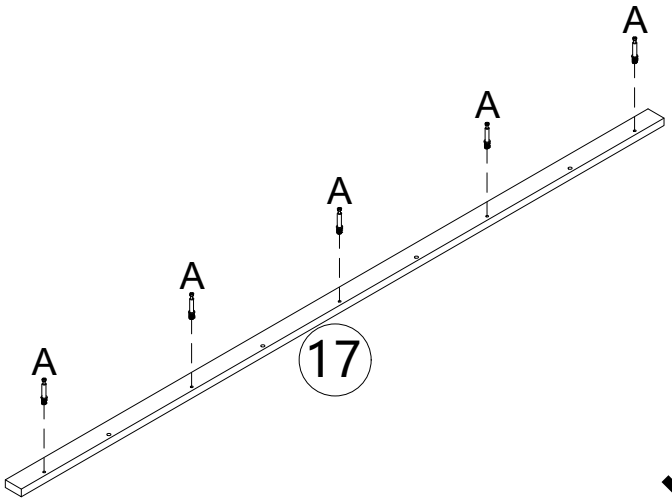

×2

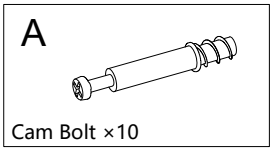

Step 3 2

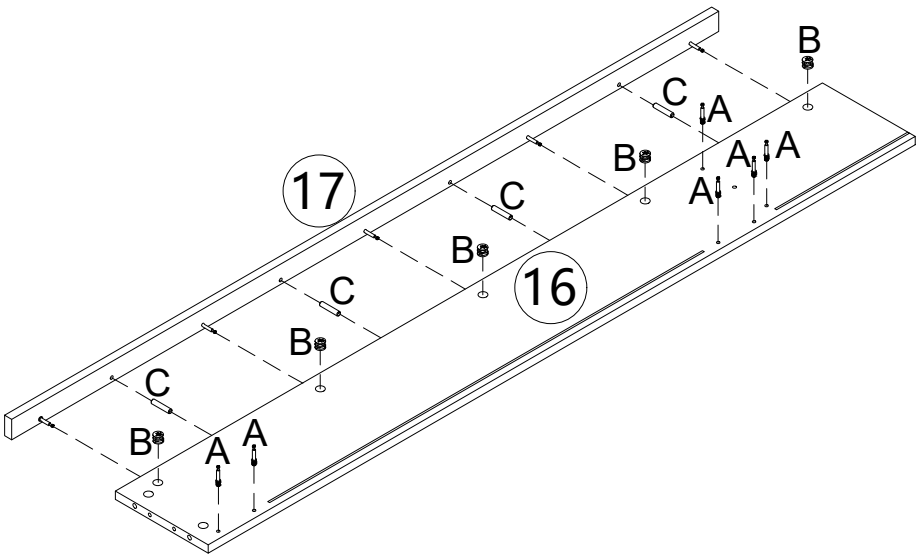

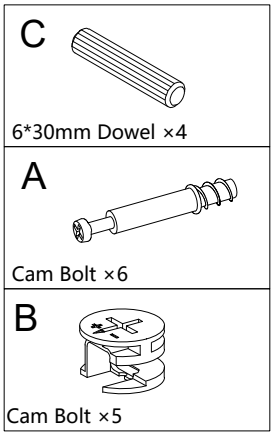

Assembly Instructions

Step 3 3

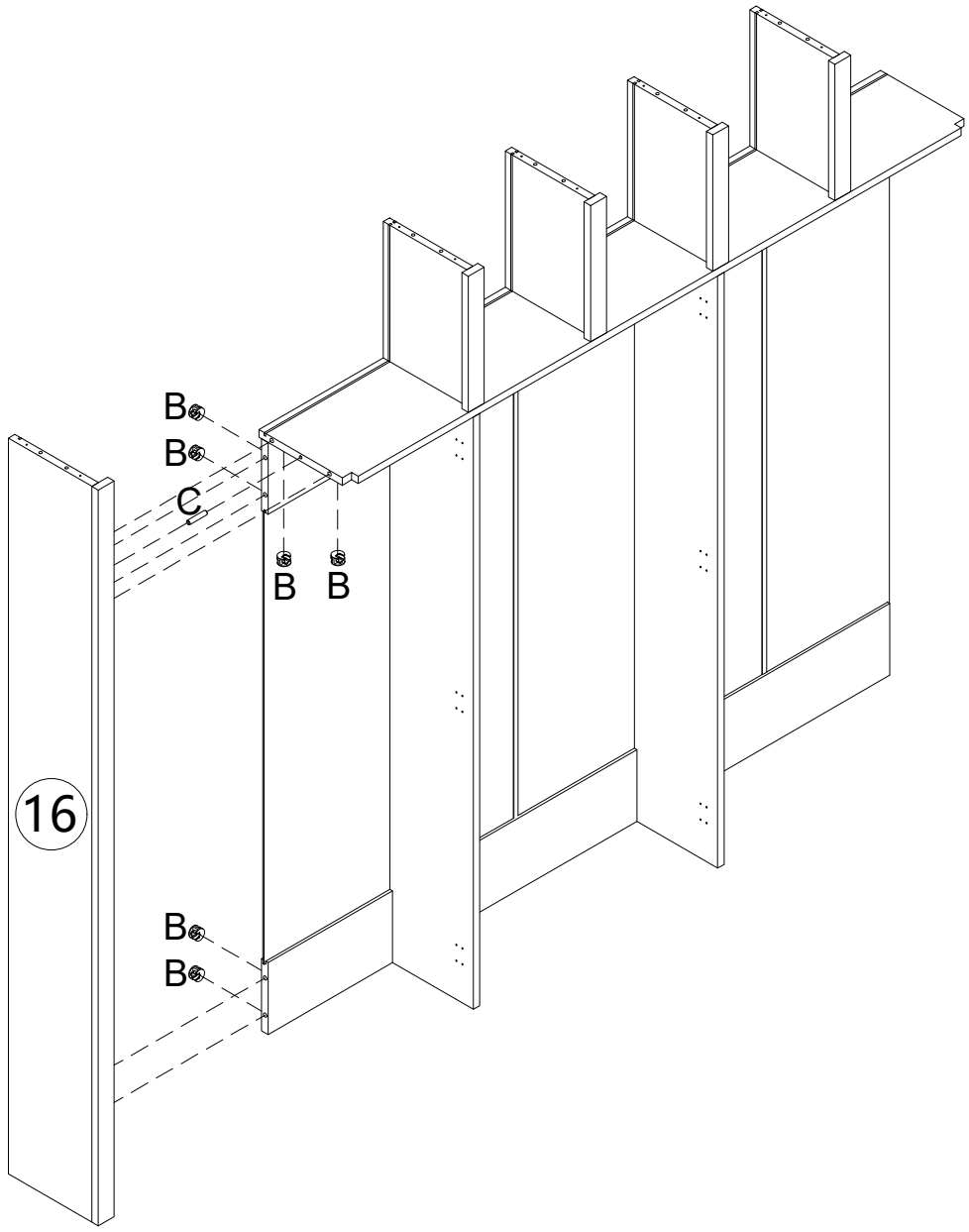

C

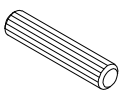

6*30mm Dowel ×1

B



Cam Bolt ×6

Assembly Instructions

Step 3 4

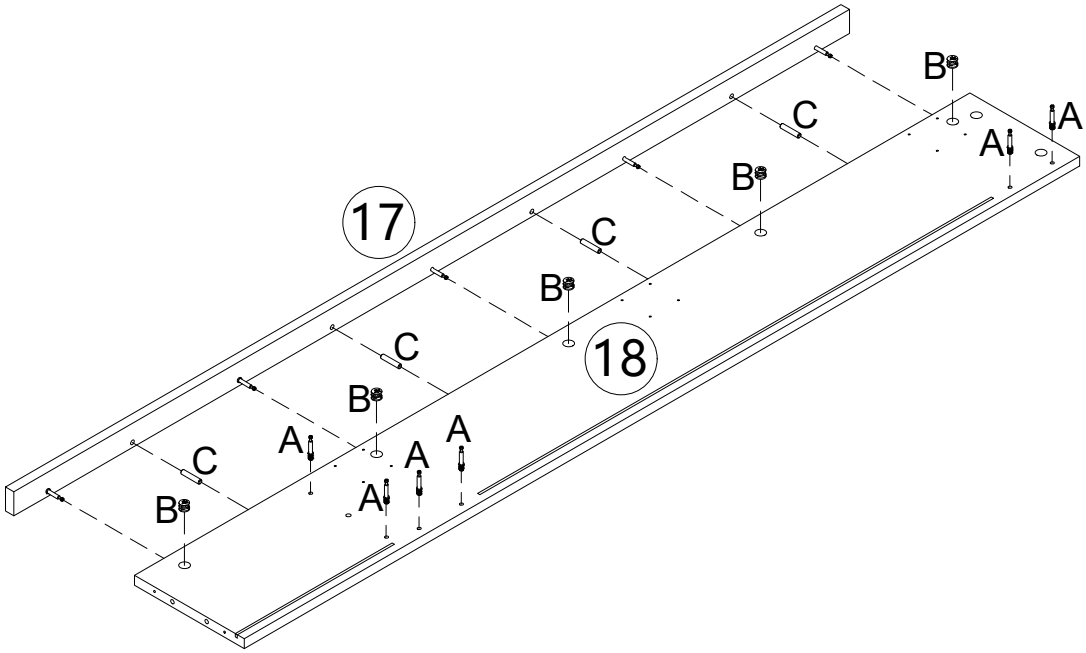

C

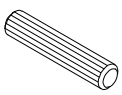

6*30mm Dowel ×4

A

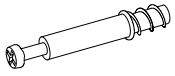

Cam Bolt ×6

B



Cam Bolt ×5

Assembly Instructions

Step 3 5

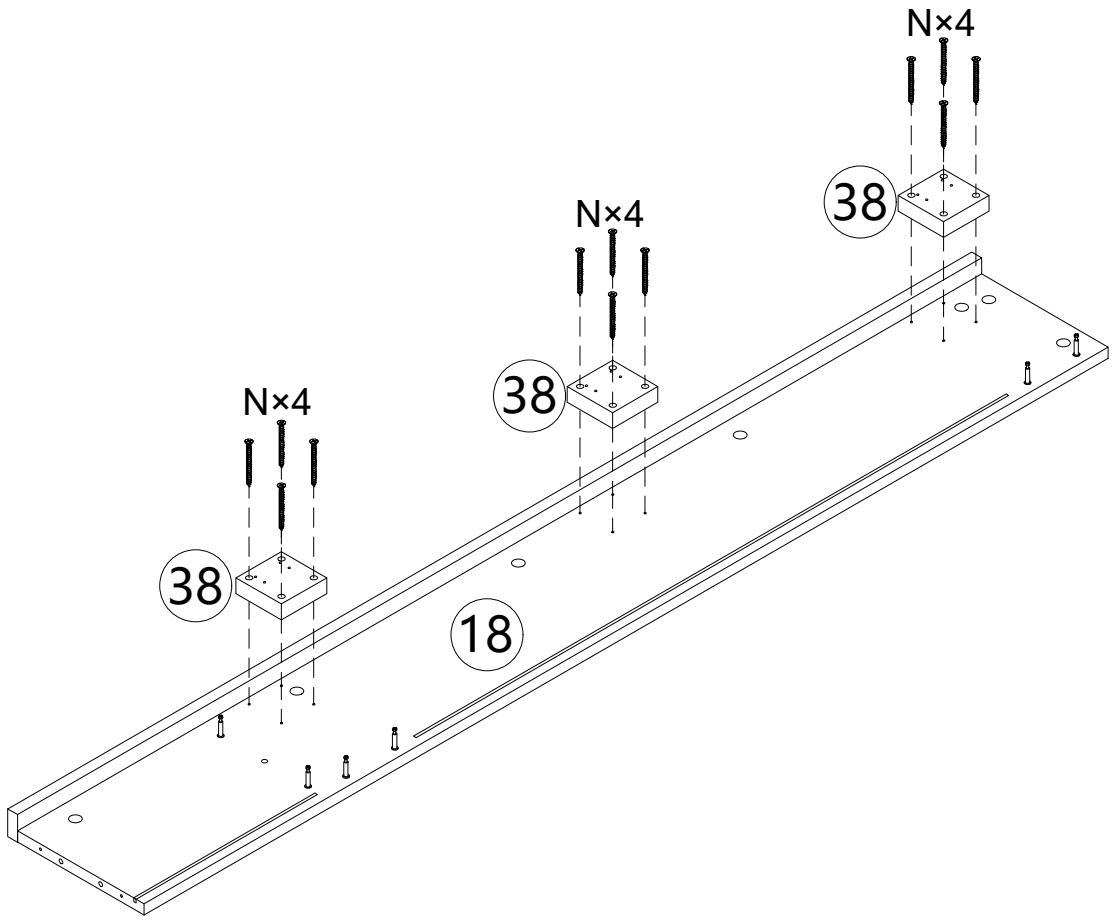

N



4*30mm Screw ×12

Assembly Instructions

Step 3 6

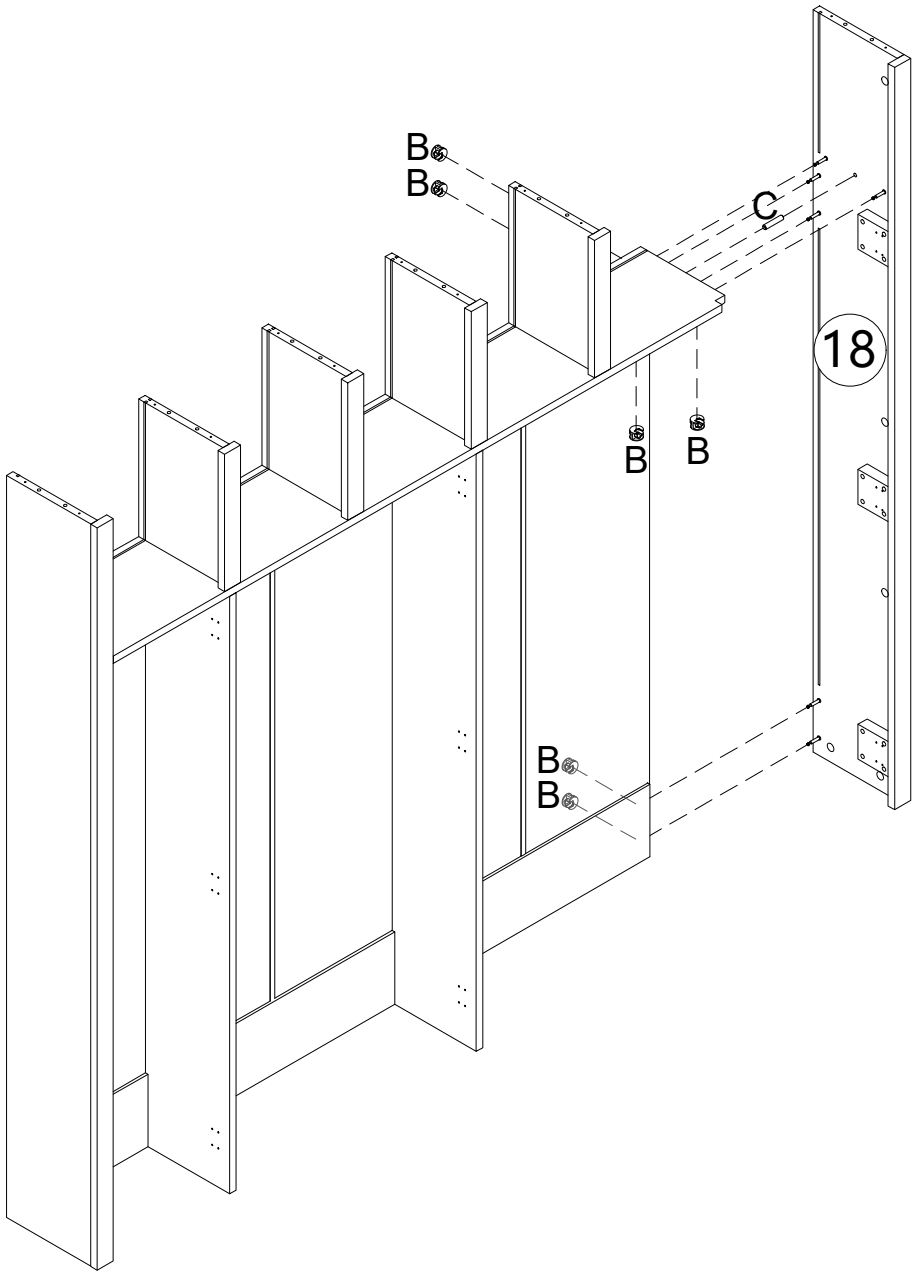

C 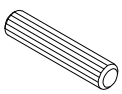	6*30mm Dowel ×1
B 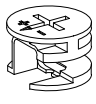	Cam Bolt ×6

Assembly Instructions

Step 3 7

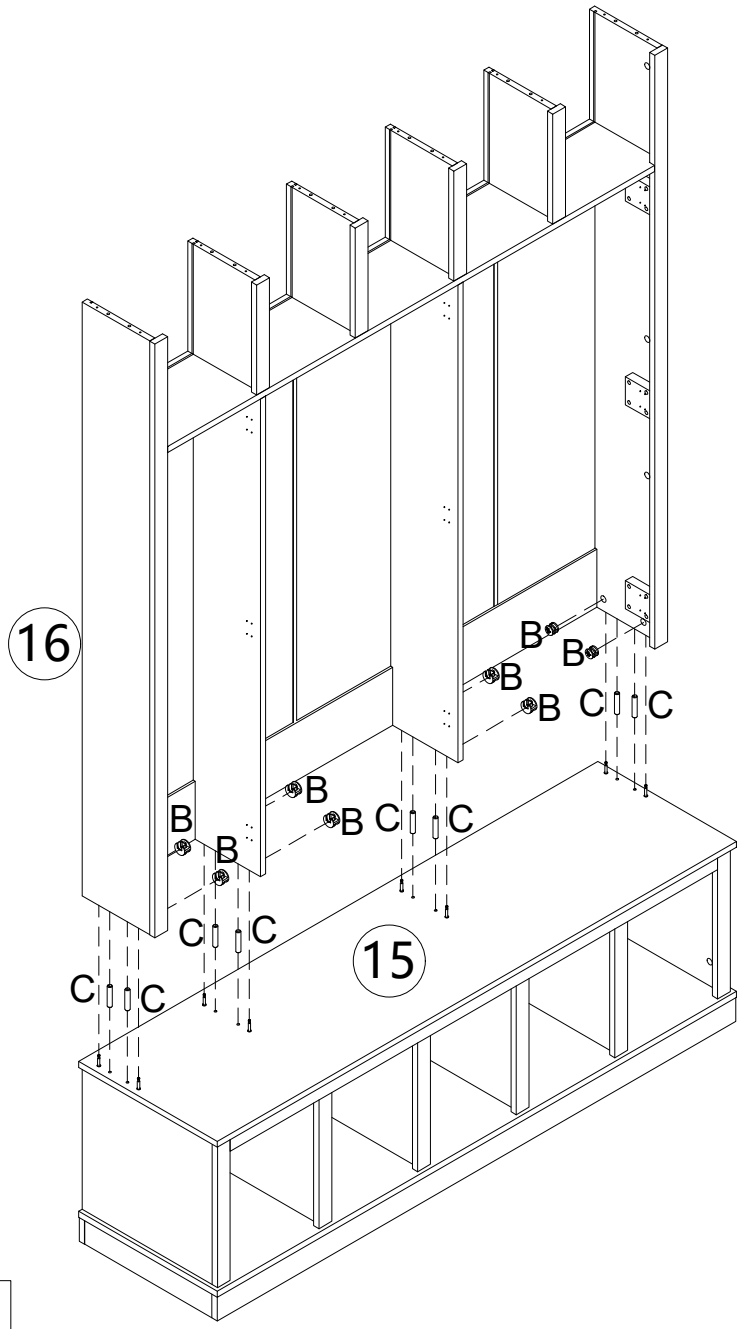

C 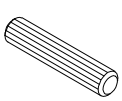 6*30mm Dowel ×8	
B  Cam Bolt ×8	

Assembly Instructions

Step 3 8

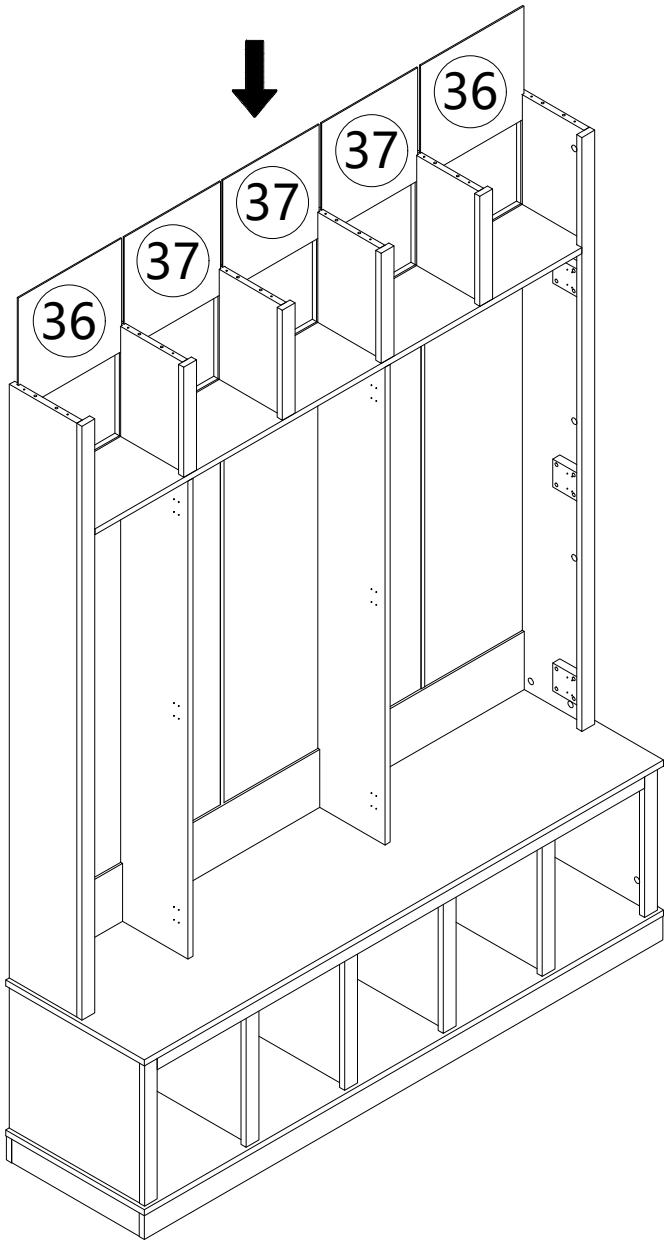

Assembly Instructions

Step 3 9

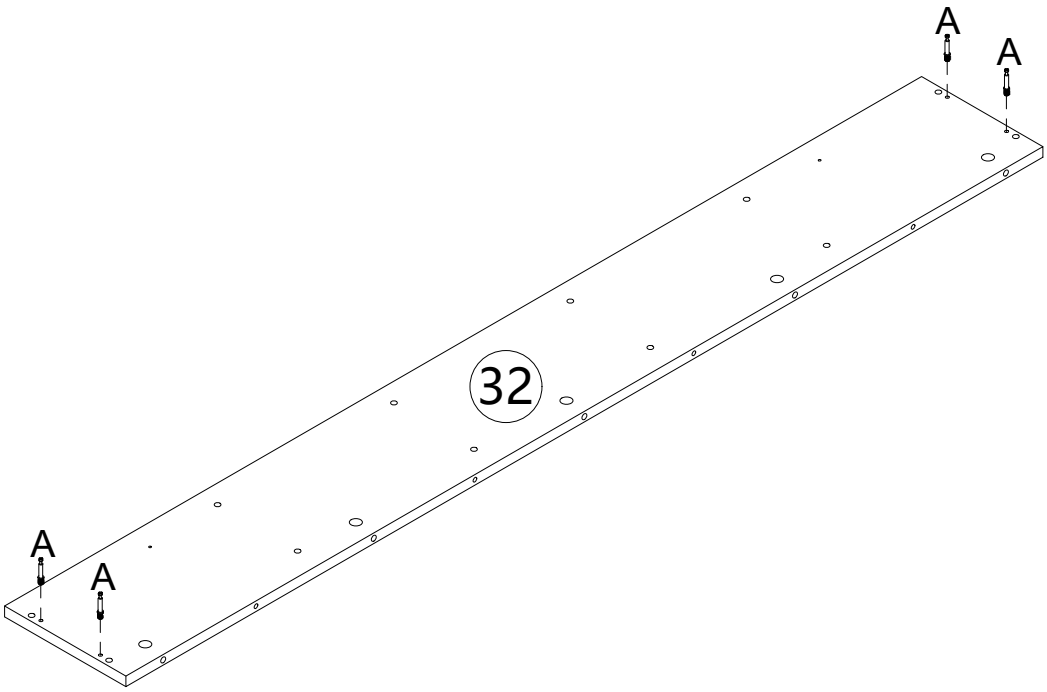

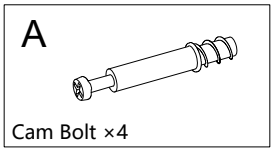

Assembly Instructions

Step 4 0

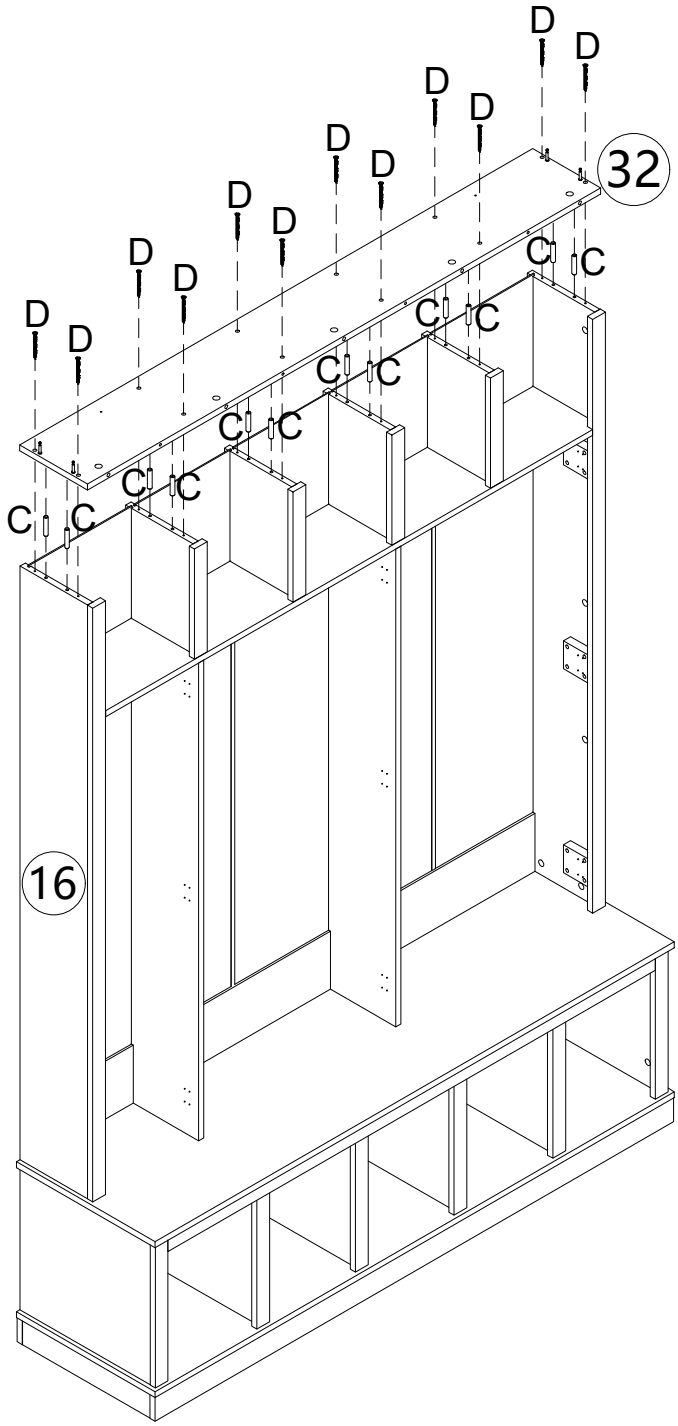

C 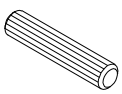 6*30mm Dowel ×12	
D  4*40mm Screw ×12	

Assembly Instructions

Step 4 1

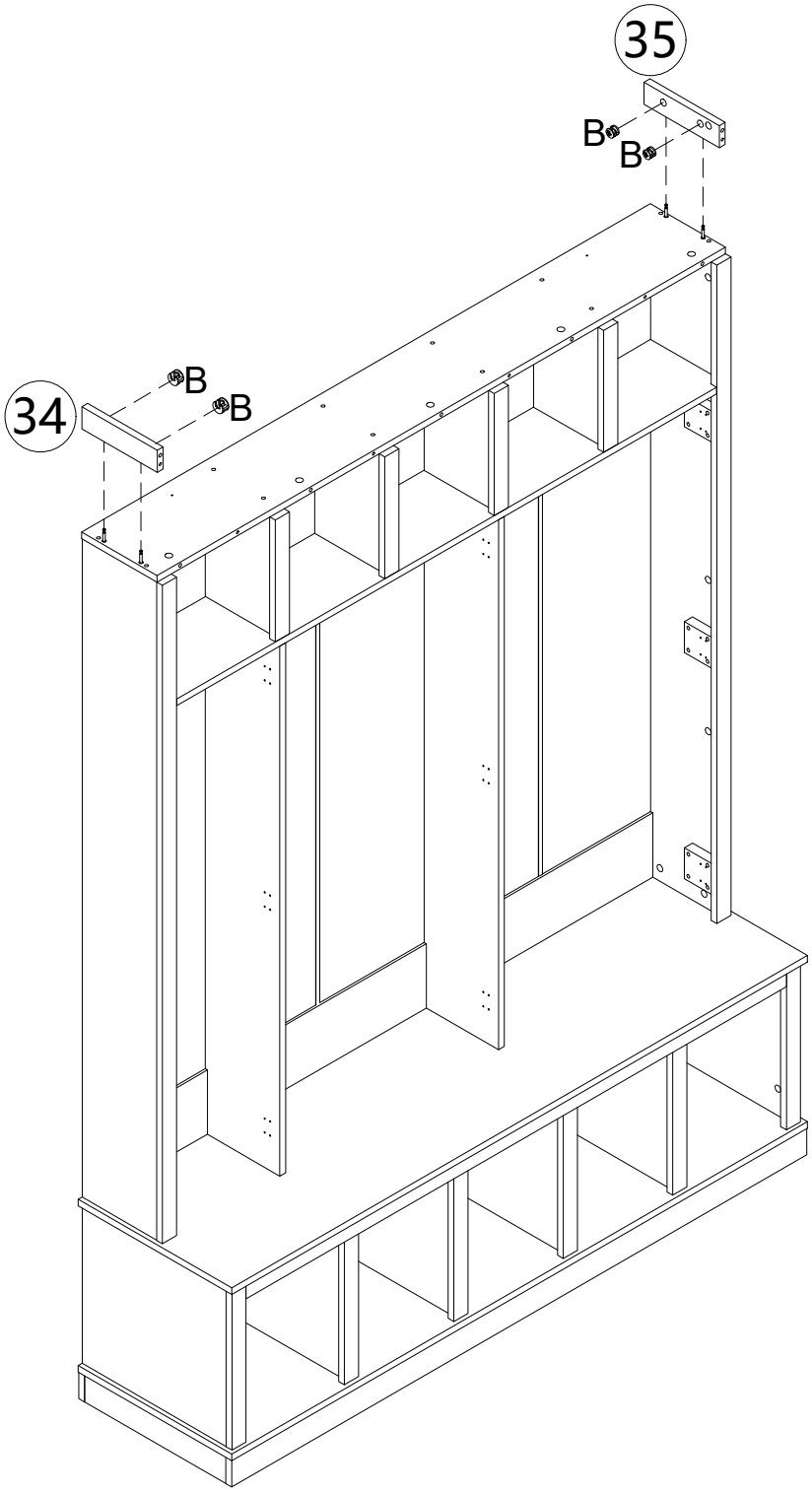

B



Cam Bolt ×4

Assembly Instructions

Step 4 2

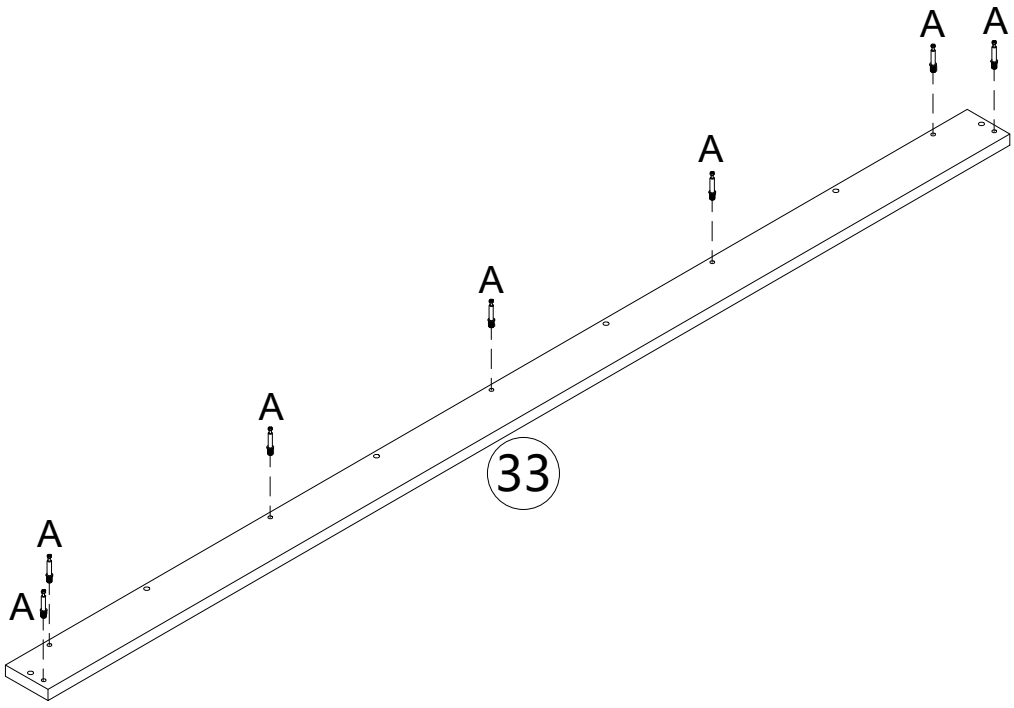

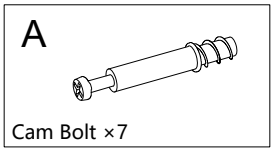

Assembly Instructions

Step 4 3

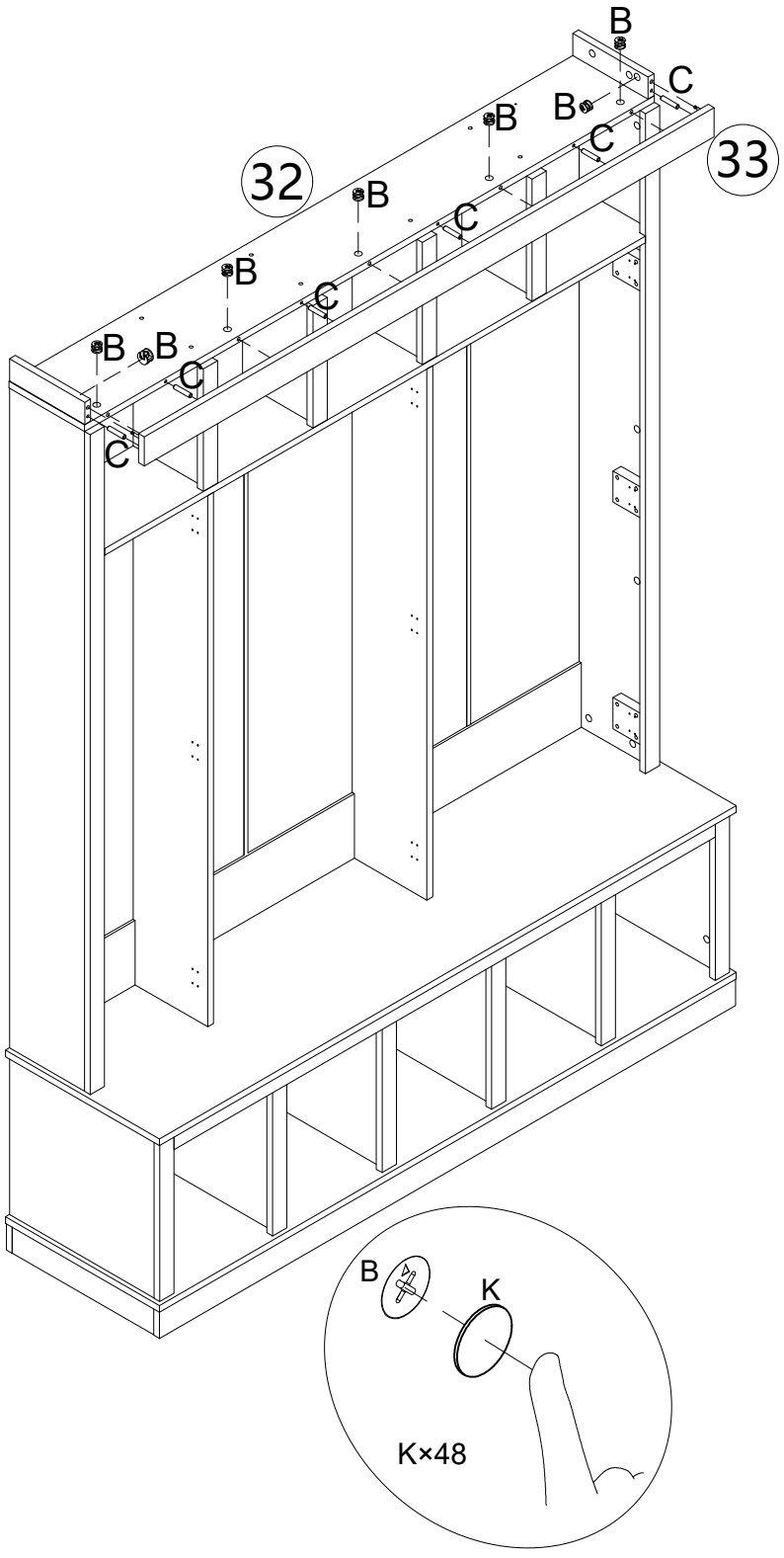

K	Hole Cover ×48
C	6*30mm Dowel ×6
B	Cam Bolt ×7

To cover the prominent Part B.

Assembly Instructions

Step 4 4

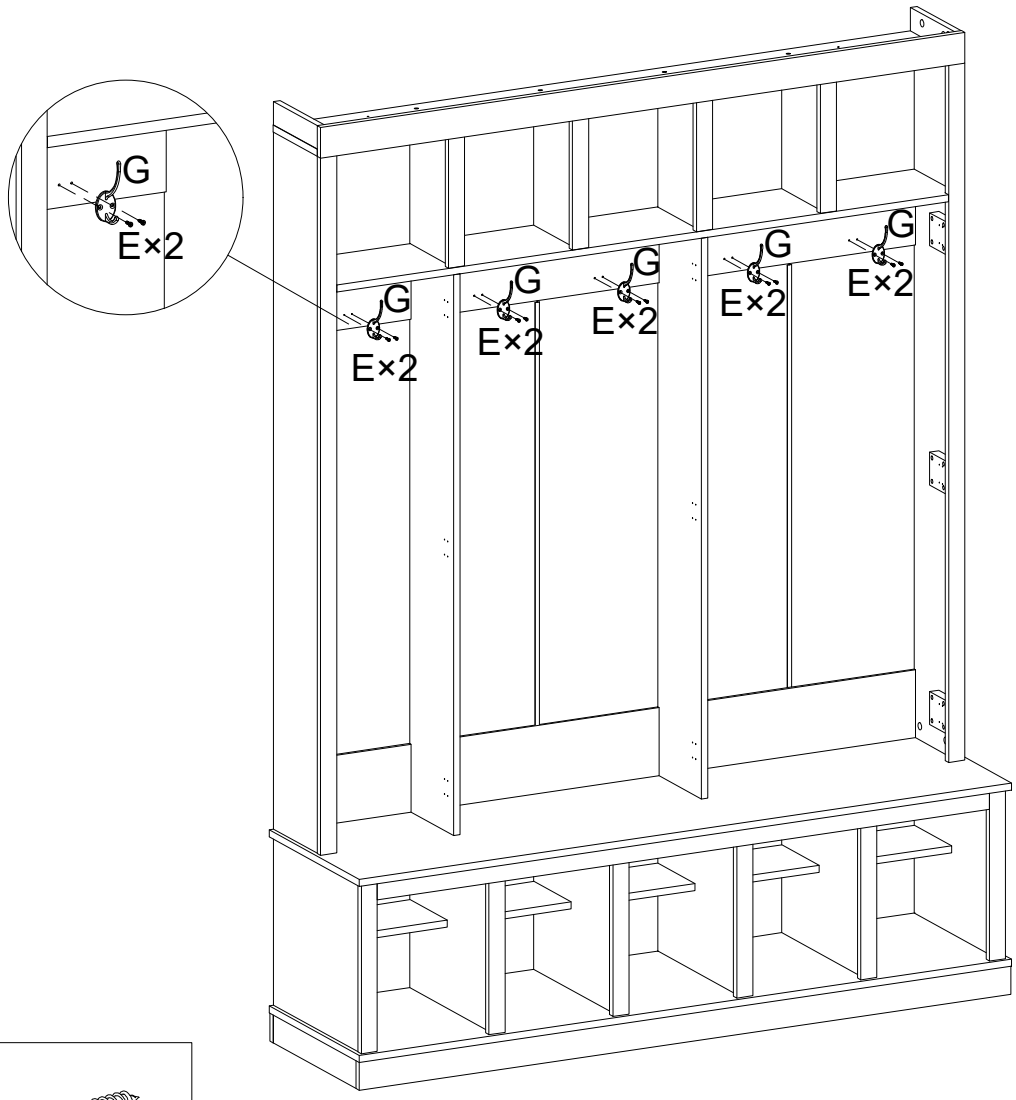

E 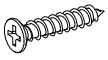 3*12mm Screw ×10	
G  Coat Hook ×5	

Assembly Instructions

Step 4 5

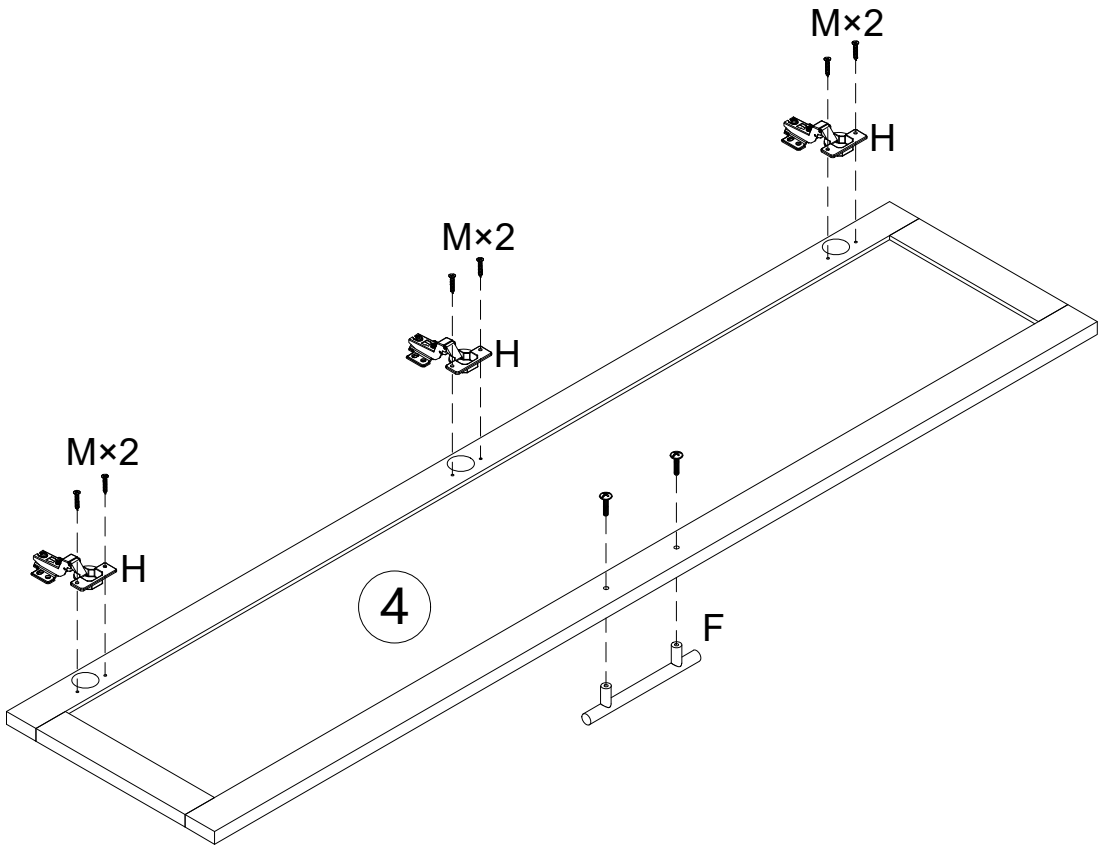

×5

H 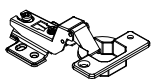 Door Hinge ×15	
M 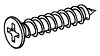 3.5*14mm Screw ×30	
F 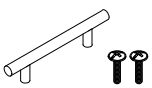 4*18mm Bar Handle ×5set	

Assembly Instructions

Step 4 6

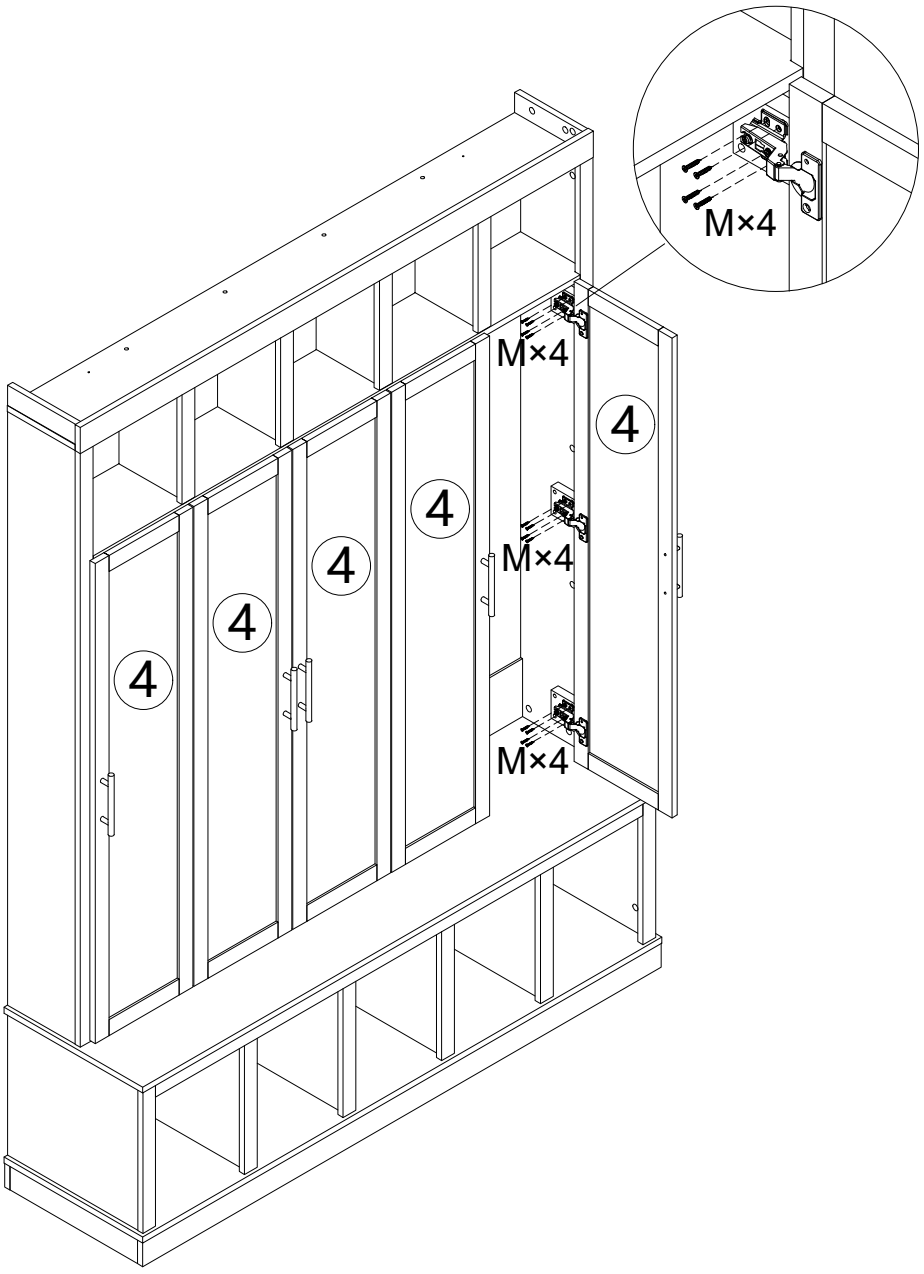

M

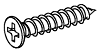

3.5*14mm Screw ×60

Assembly Instructions

Step 4 7

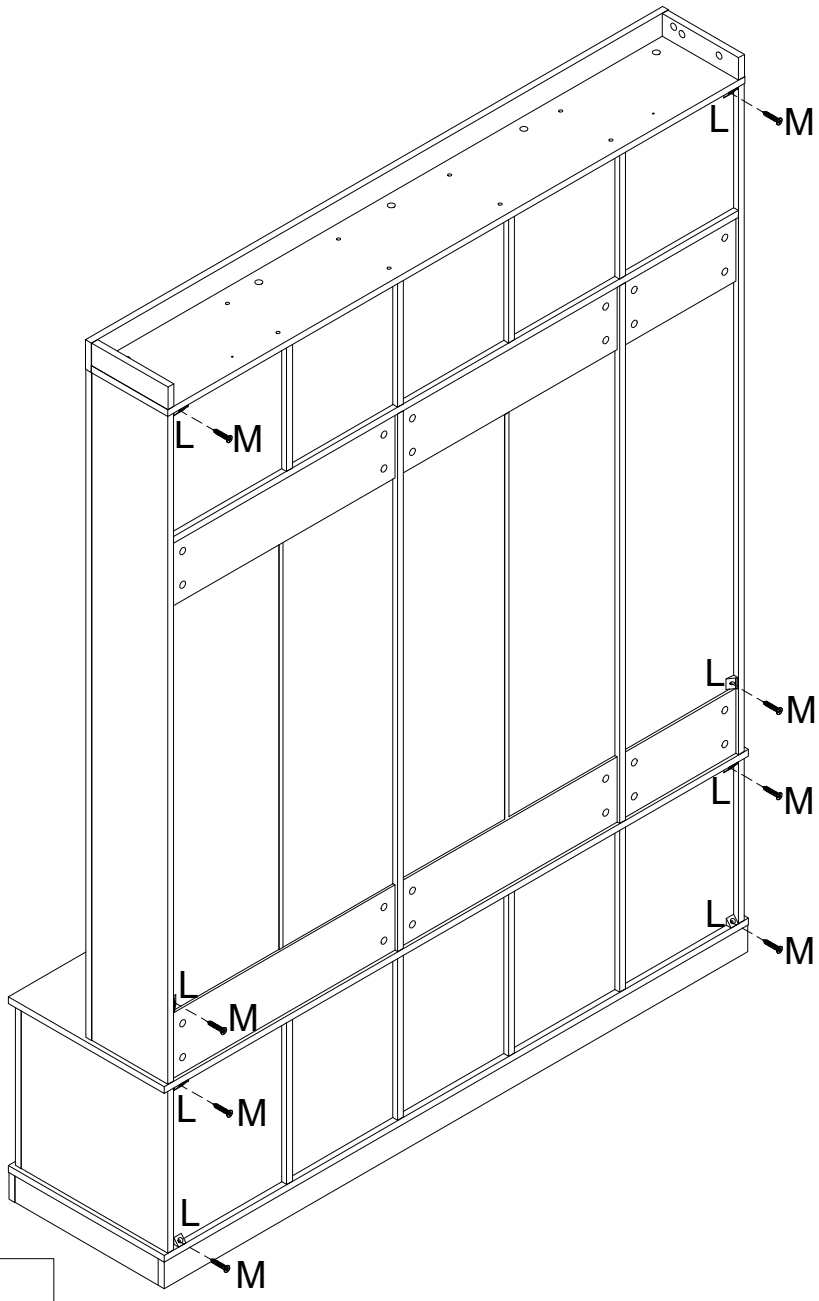

M 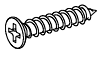	3.5*14mm Screw ×8
L 	Back Panel Clip ×8

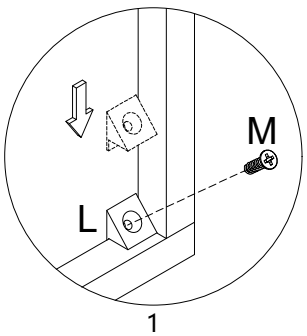

1

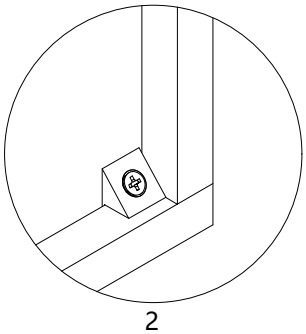

2

Assembly Instructions

Finish

