Hall Tree

Assembly Instructions - Please keep for future reference

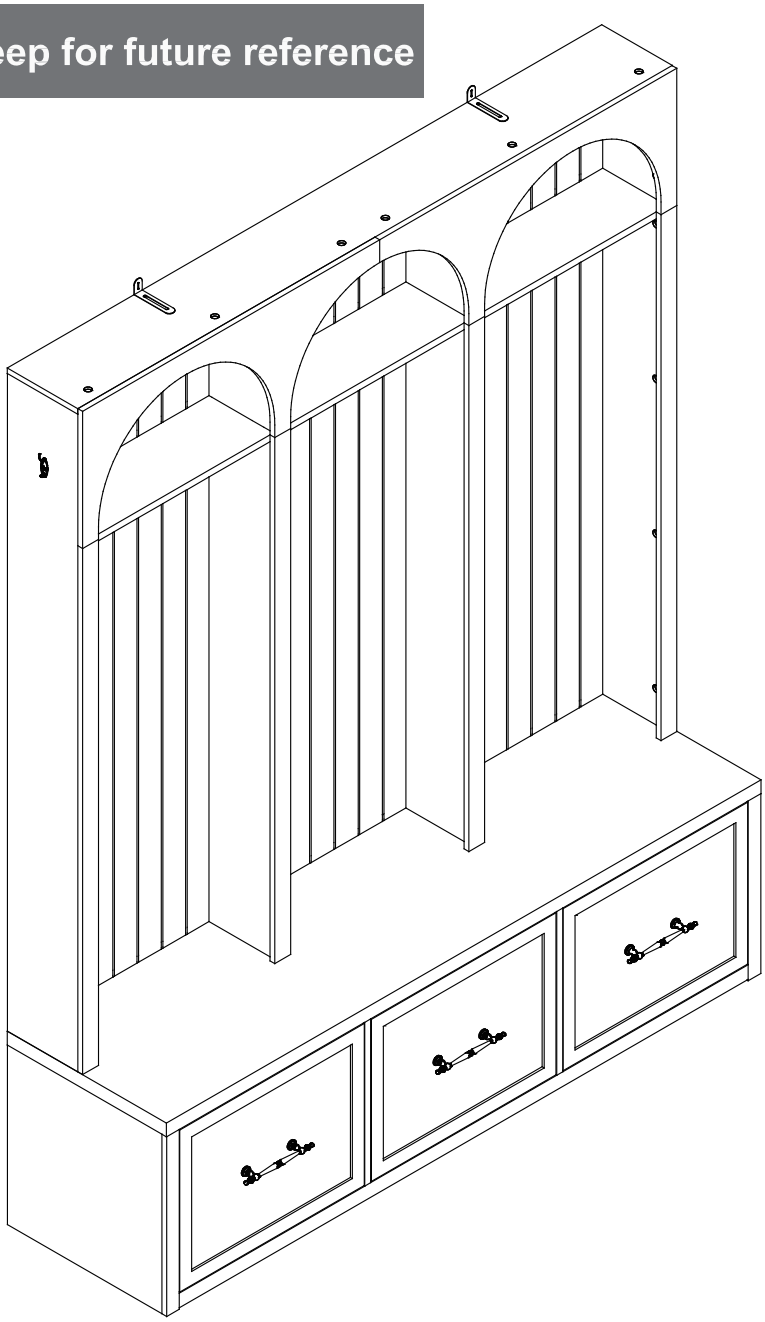

Dimensions
Width- 59.05inch
Depth- 15.75inch
Height- 74.8inch

WARNING



This product is NOT a Clothing Storage Unit (CSU).
DO NOT use it for clothing storage.
Improper use may cause furniture tipover.

Important – Please read these instructions fully before starting assembly

Safety and Care Advice

Important – Please read these instructions fully before starting assembly

• Check you have all the components and tools listed on the following pages.

• Remove all fittings from the plastic bags and separate them into their groups.

• Keep children and animals away from the work area, small parts could choke if swallowed.

• Make sure you have enough space to layout the parts before starting.

• During assembly do not stand or put weight on the product, this could cause damage.

• Assemble the item as close to its final position (in the same room) as possible.

• Assemble on a soft level surface to avoid damaging the unit or your floor.

• Parts of the assembly will be easier with 2 people.



• To reduce the likelihood of damaging your product please ensure that your power drill is set on a low torque setting.

Care and maintenance

• Only clean using a damp cloth and mild detergent, do no use bleach or abrasive cleaners.

• From time to time check that there are no loose screws on this unit.

• This product should not be discarded with household waste. Take to your local authority waste disposal centre.

Handy Hints

• Assemble all parts and bolts loosely during assembly, only once the product is complete should you fully tighten the bolts

• Regularly check and ensure That all bolts and fittings are tightened properly.

WARNING
In order to help prevent overturning – please follow these instructions

To help prevent product toppling over please follow the below steps:-

Use the anti tip stap or wall fixing method provided (if applicable)
Do not allow children to climb or hang on the furniture
Do not open more than one drawer at a time
Do not place heavy items in the top drawers
Do not place heavy items on top of the furniture, unless the furniture has been designed for this purpose

Components - Fittings

Please check you have all the panels listed below

Note:The quantitie below are the correcet amount to complete the assembly. In some cases more fittings may be supplied than are required.

A 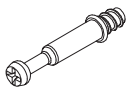 Cam Bolt x 104+2	B  6*30mm Dowel x 69+2	C  Cam lock x 104+2	D 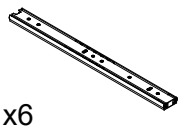 Slide x6
E  3*12mm Screw x 24+2	F 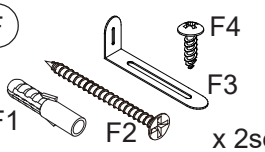 x 2set	G  4*40mm Screw x 12+1	H 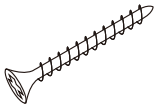 4*30mm Screw x 12+1
I  3.5*16mm Hook x 2set	J 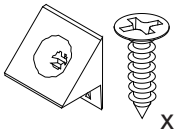 x 36set	K 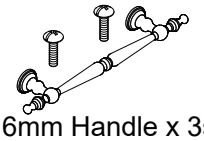 4*16mm Handle x 3set	L  Light wood color x 28
M 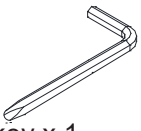 Allen key x 1	N 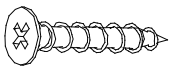 4*25mm Screw x 4	O  3.5*16mm Hook x 6set	P  Perfect fit x 28

Tools required Not Included

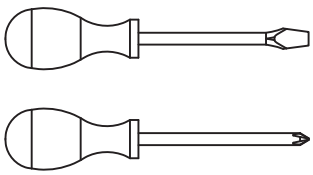

Phillips screwdriver
(medium & large)

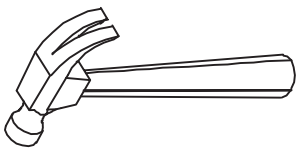

Using Camlocks

Step 1

Connect the male camlock as diected in the assembly instructions using a scewdriver.

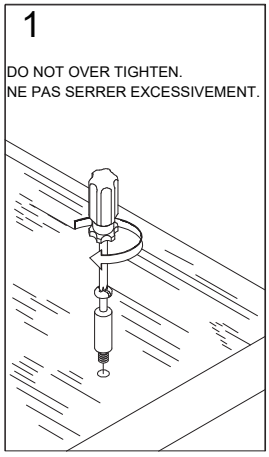

Step 2

Push the male camlock into the entry hole.

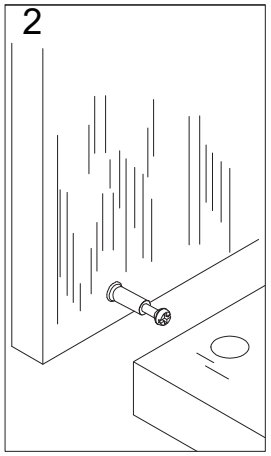

Step 3

Insert the female camlock as shown in the instruction.

Note：ensure that the arrow on the top of the camlock points towards the entry hole for the male camlock.

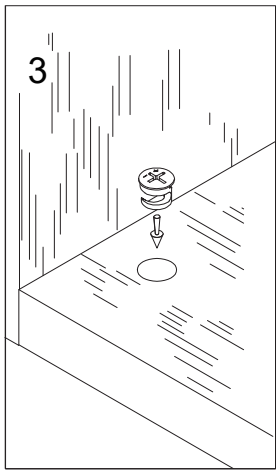

Step 4

Turn the female camlock clockwise with a screwdriver.

You should feel a click when the camlock is locked in place.

The joint is now secure.

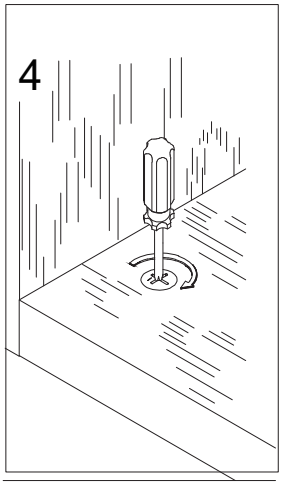

Assembly Instructions

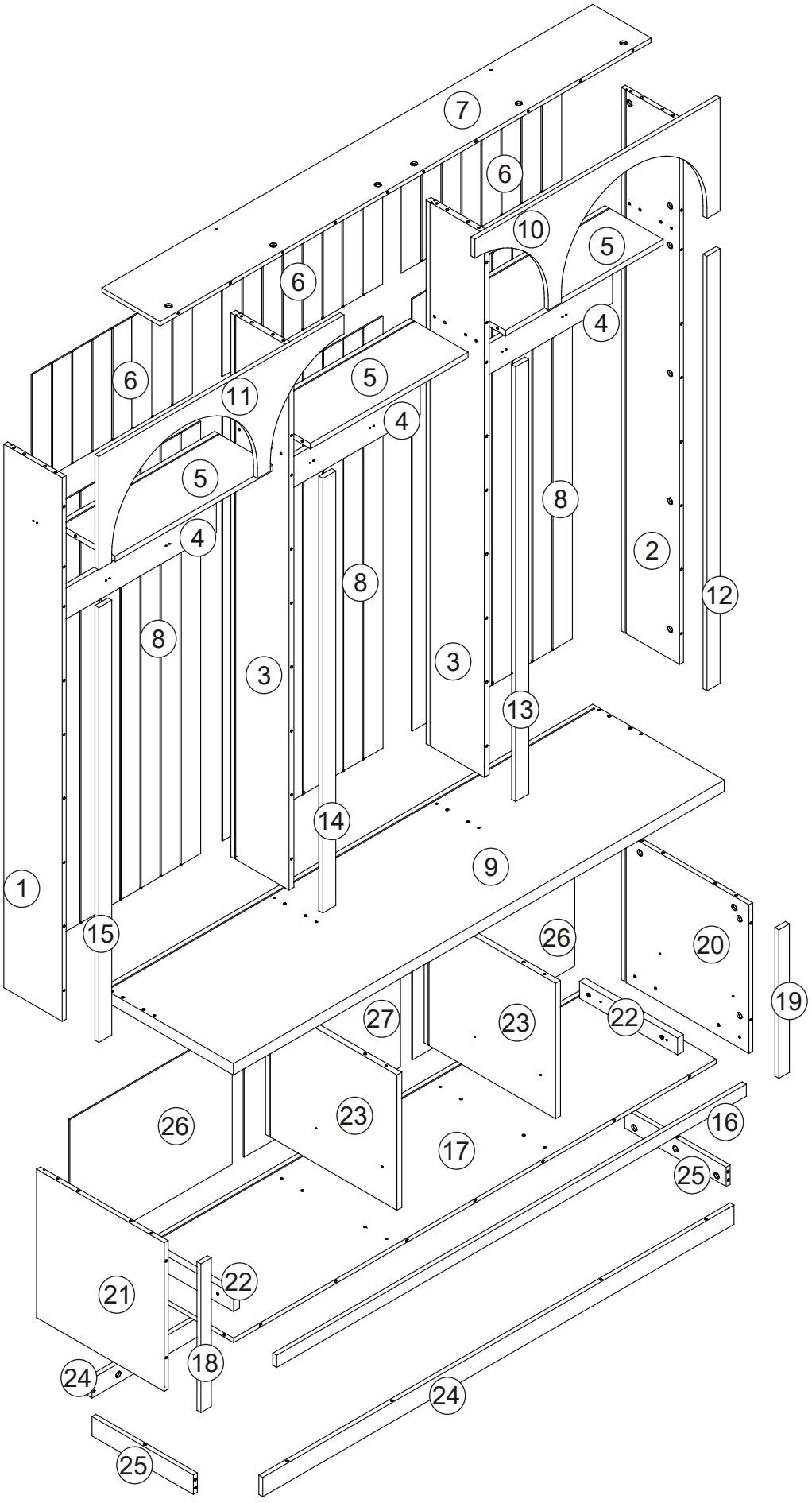

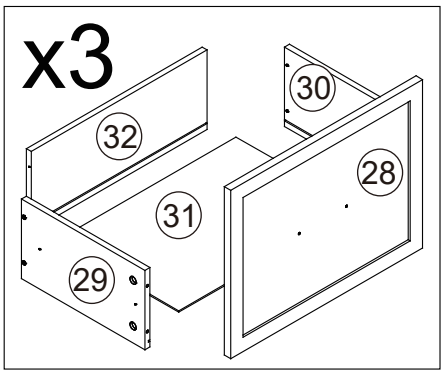

PART LIST

This product comes in 2 box.

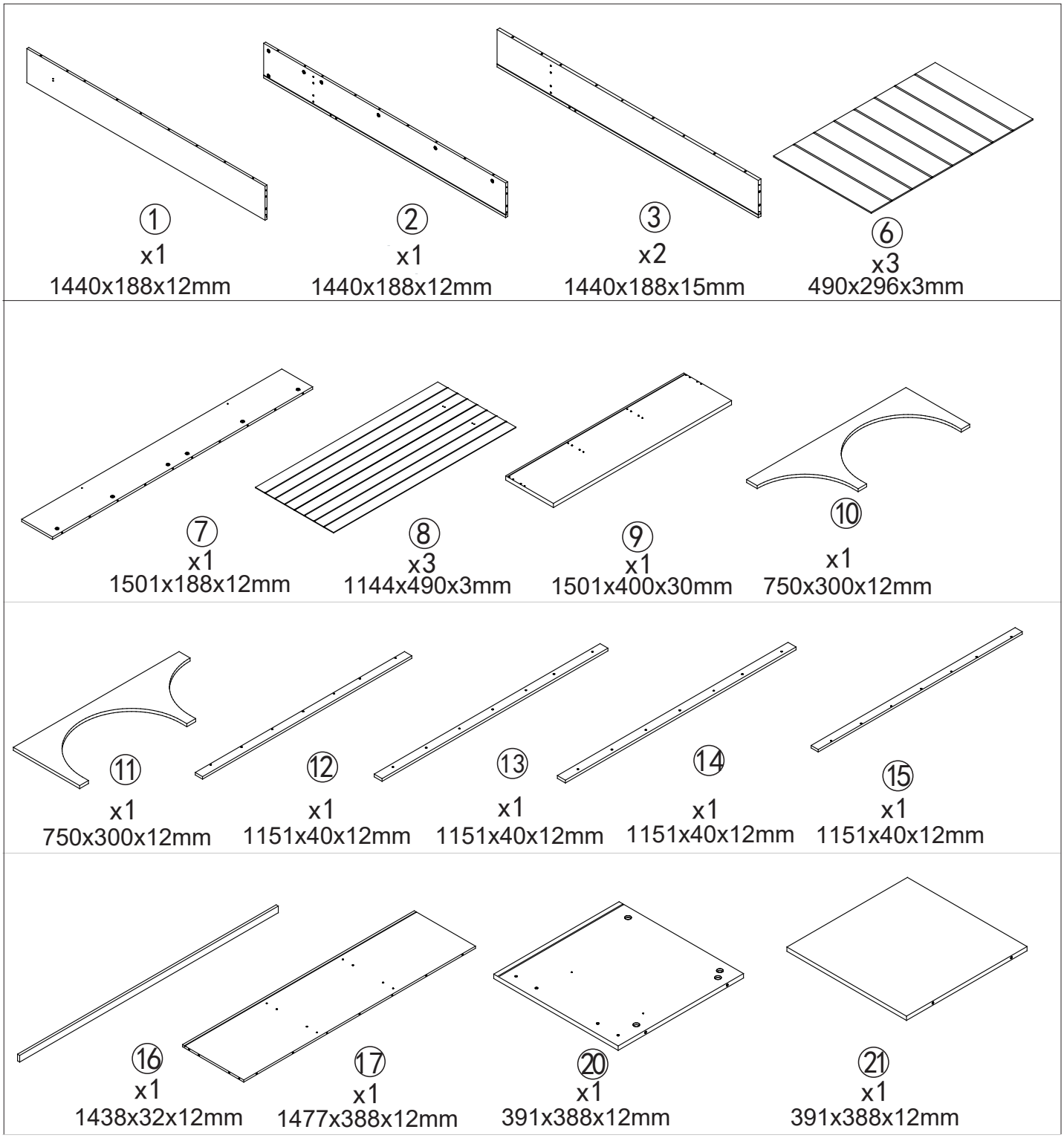

PART LIST

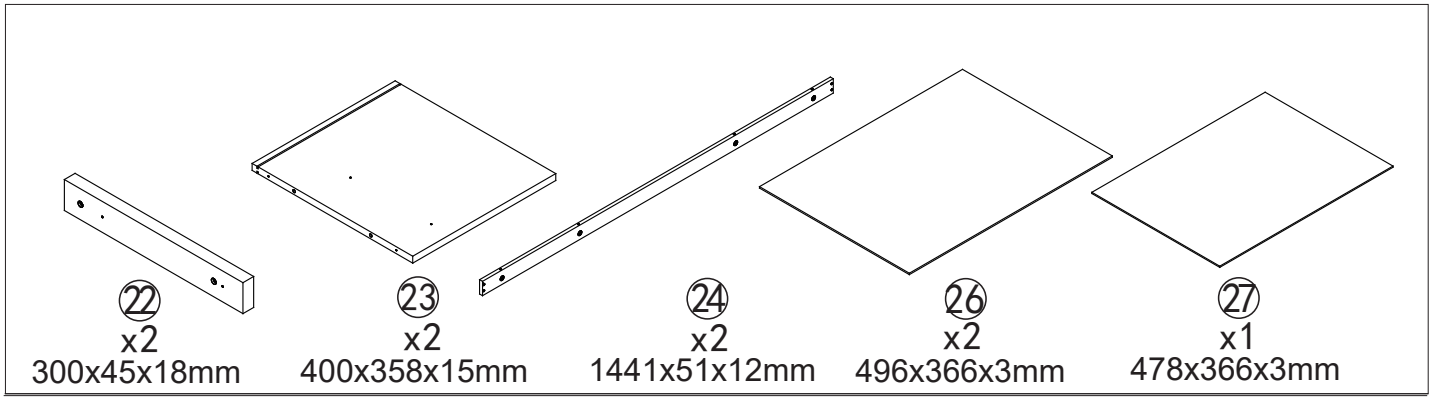

This product comes in 2 box.

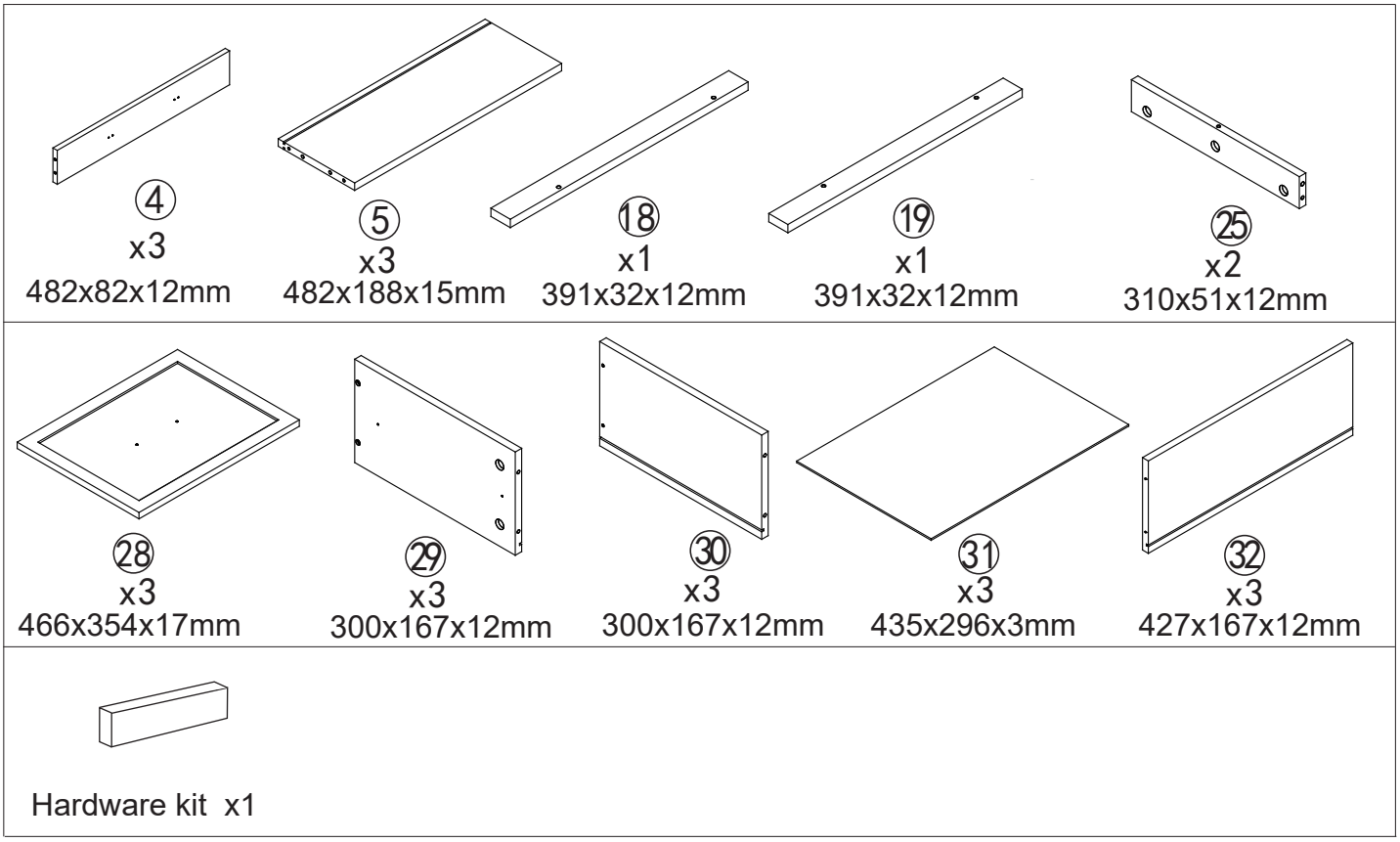

Assembly Instructions

Step 1

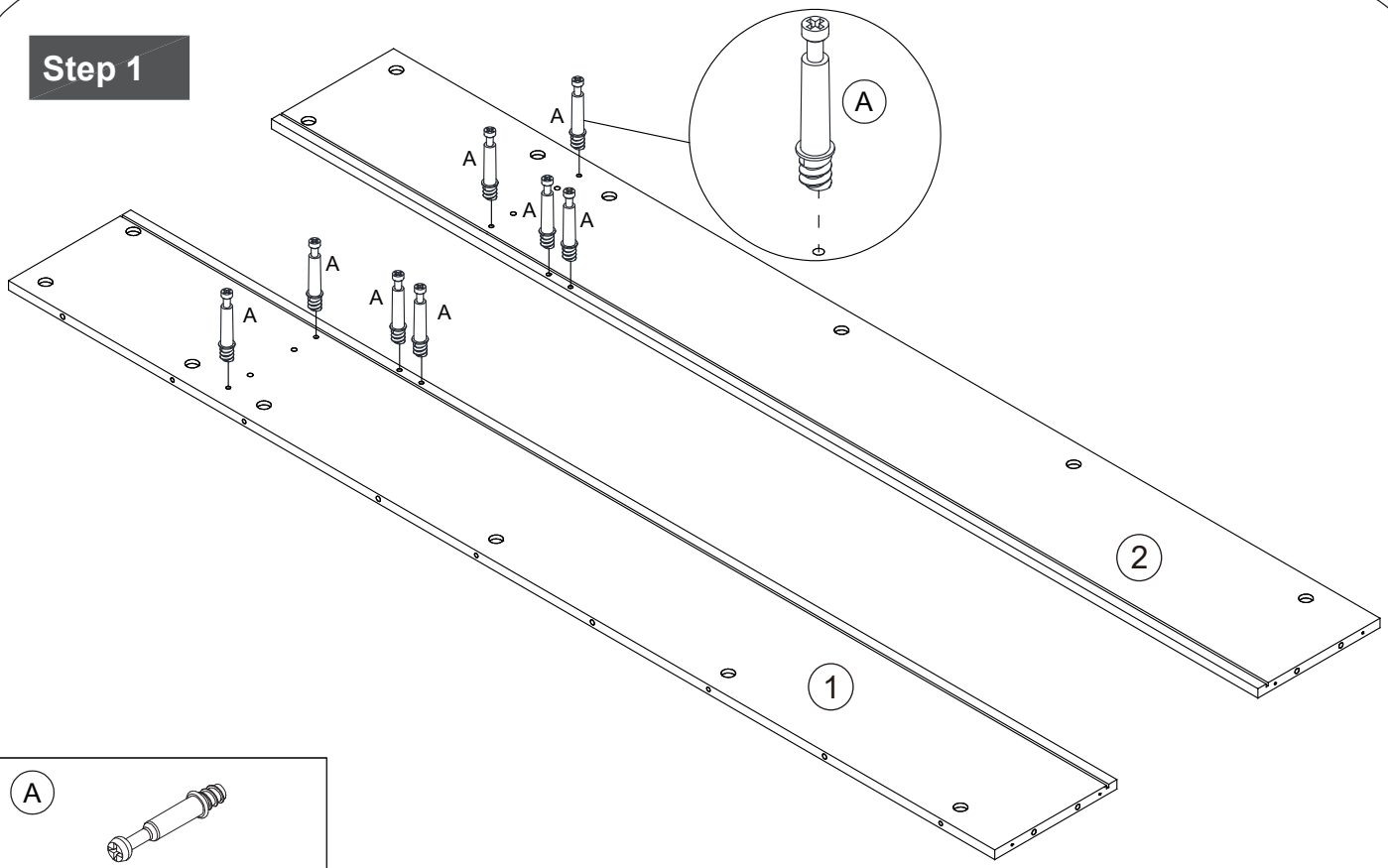

A

Cam Bolt x 8

x2

Step 2

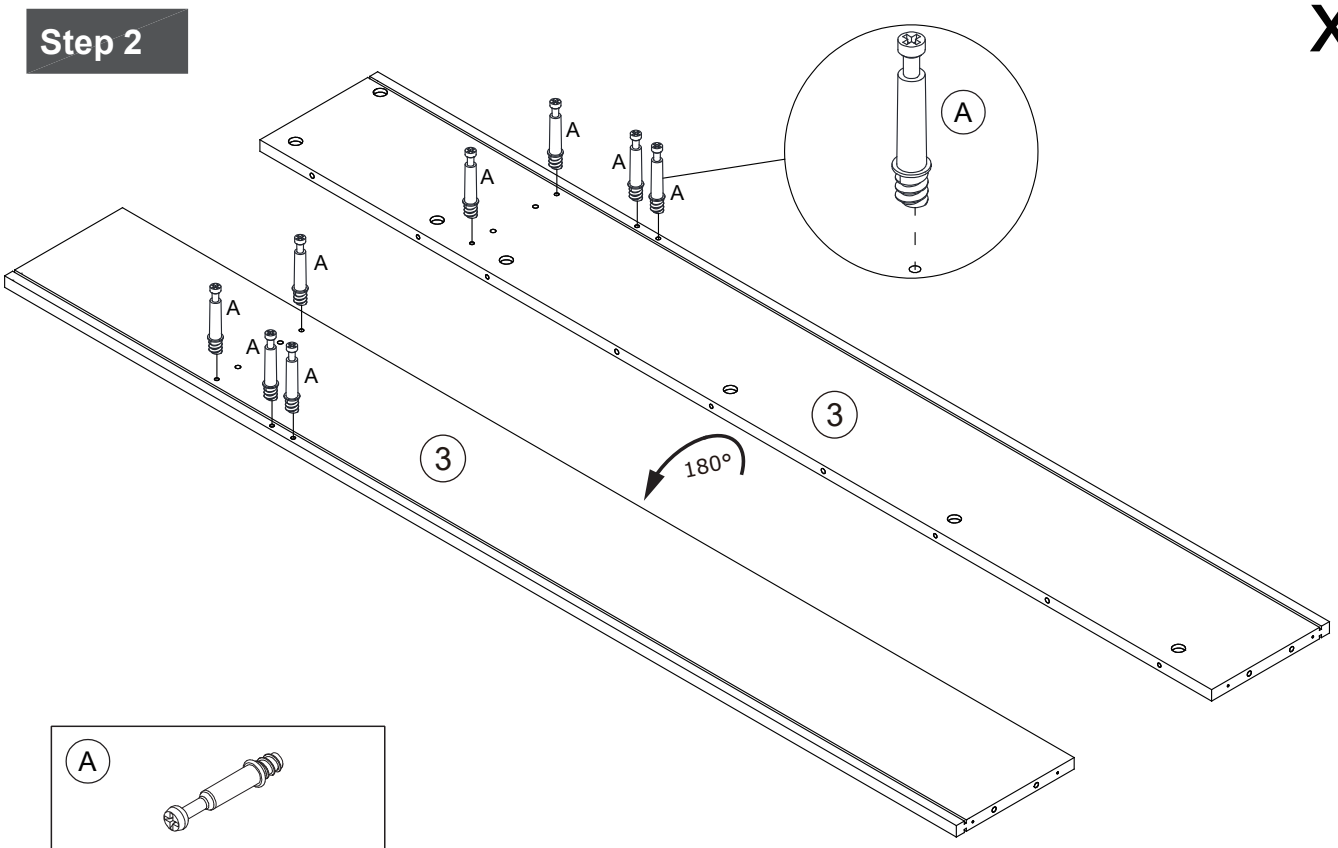

A

Cam Bolt x 16

Assembly Instructions

Step 3

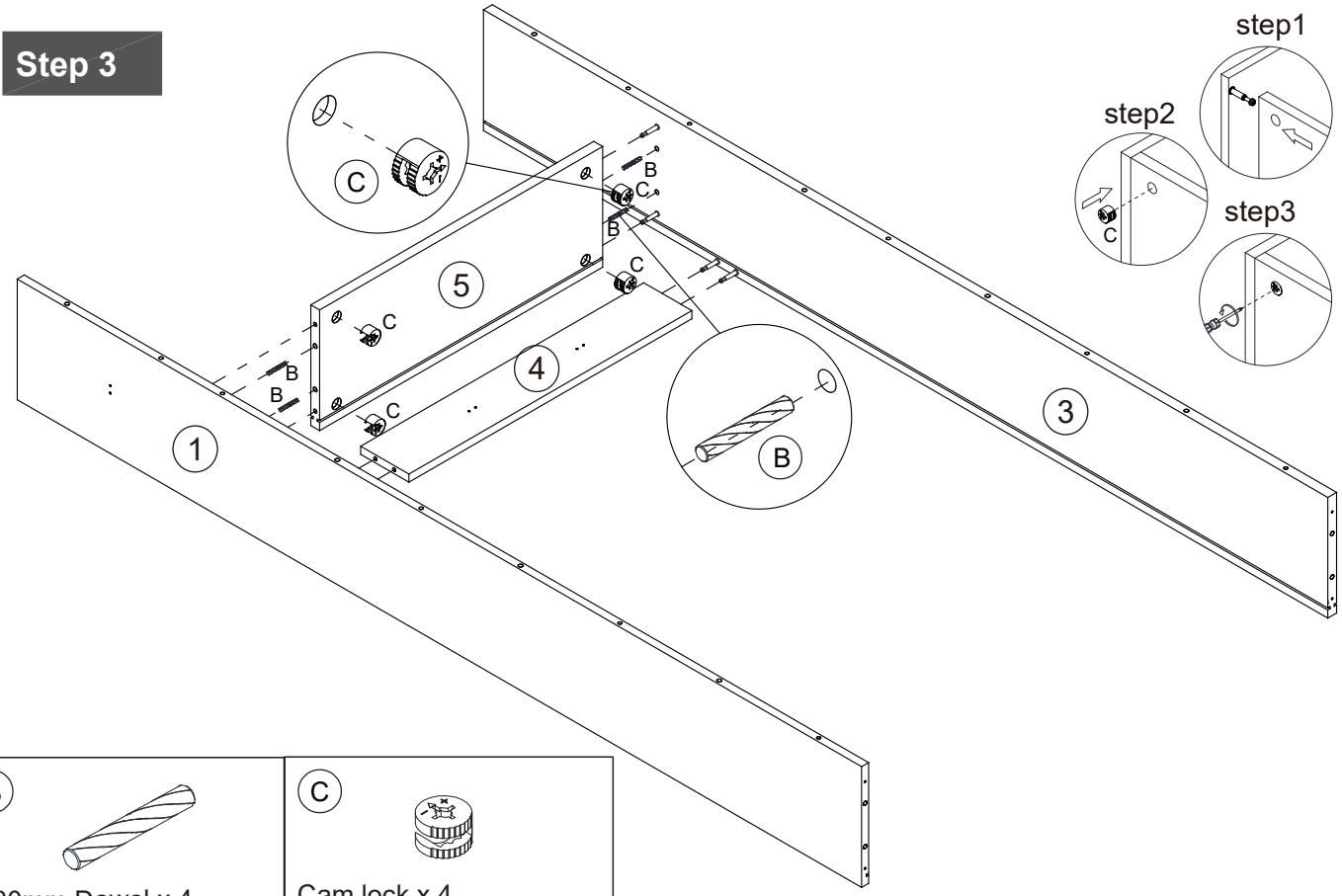

B	C
6*30mm Dowel x 4	Cam lock x 4

Step 4

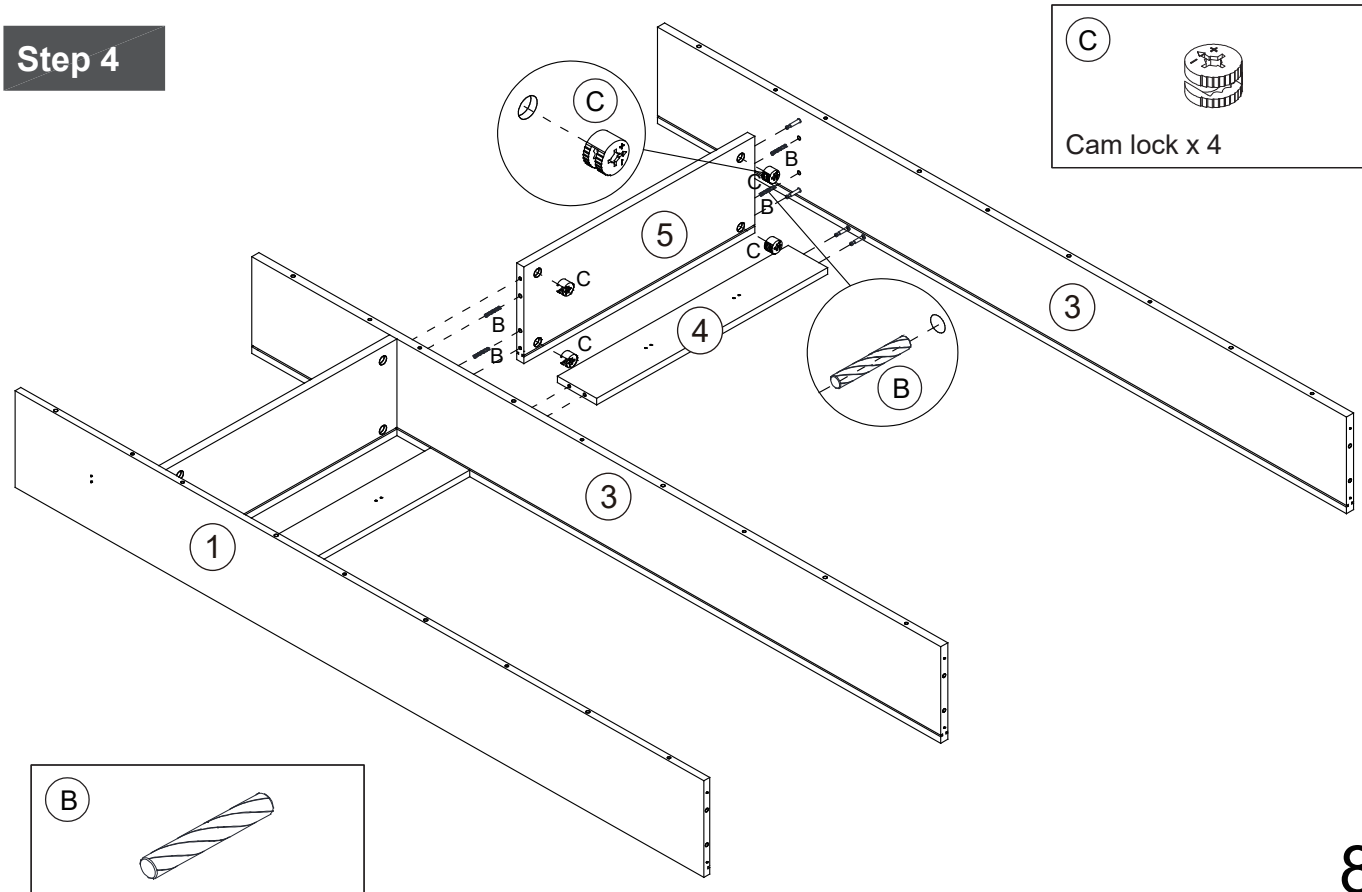

C

Cam lock x 4

B

6*30mm Dowel x 4

Assembly Instructions

Step 5

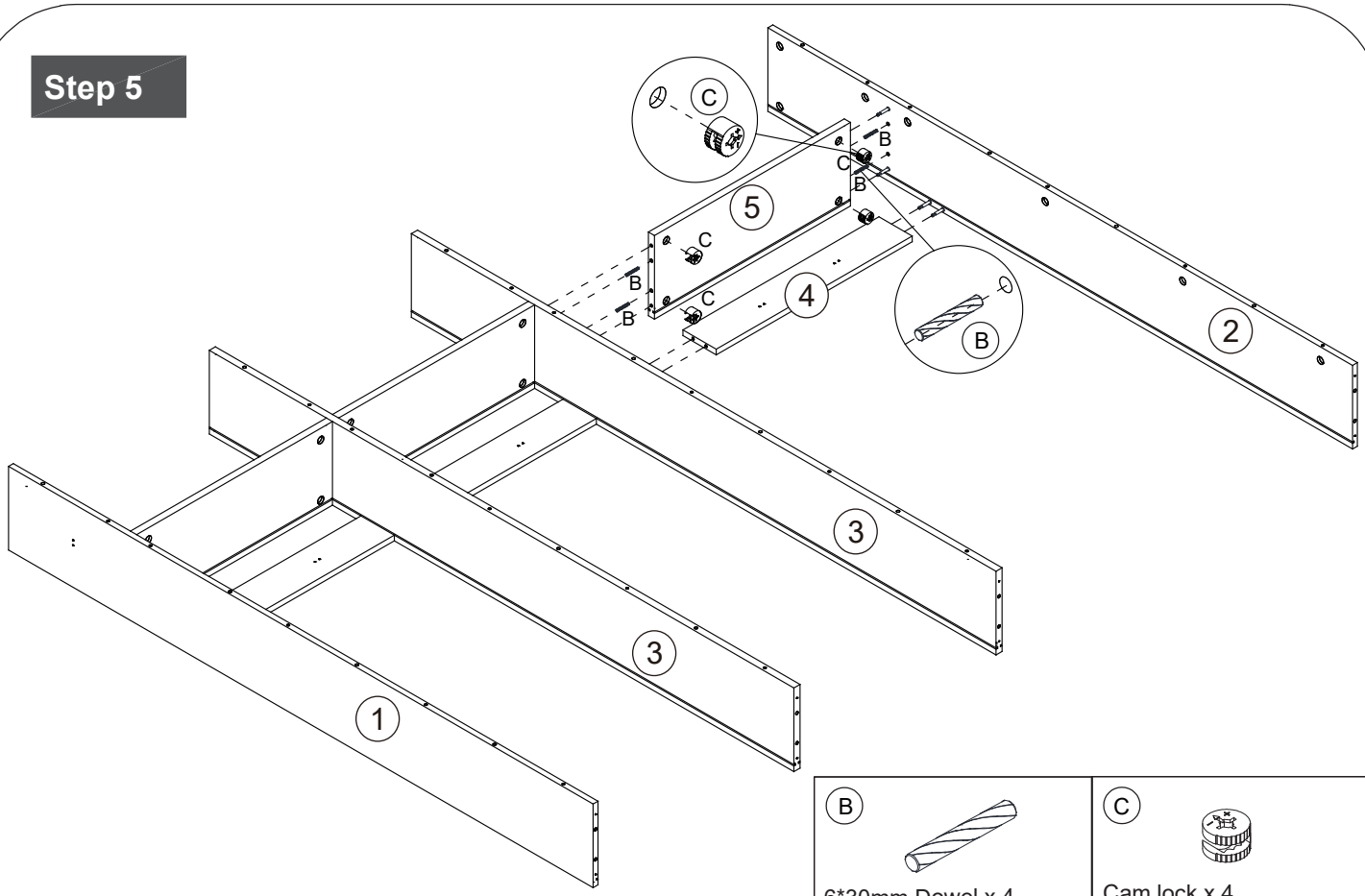

B	C
6*30mm Dowel x 4	Cam lock x 4

Step 6

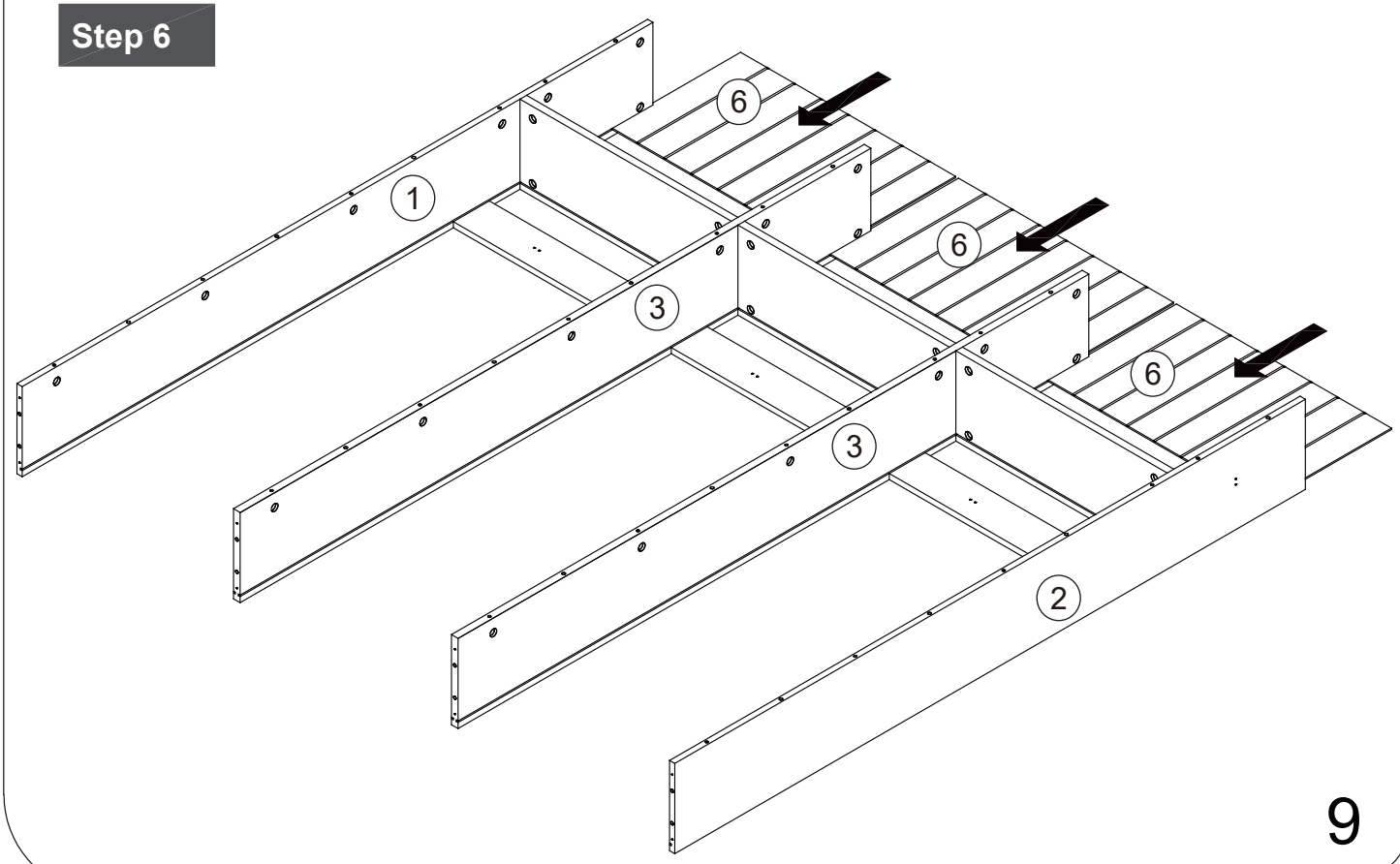

Assembly Instructions

Step 7

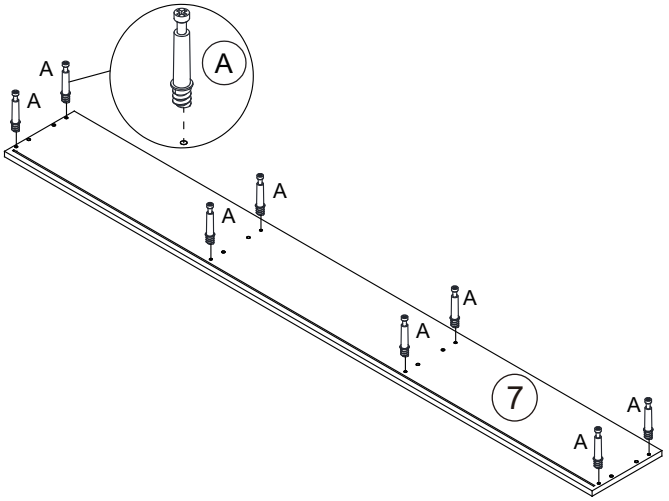

A

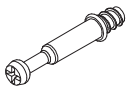

Cam Bolt x 8

Step 8

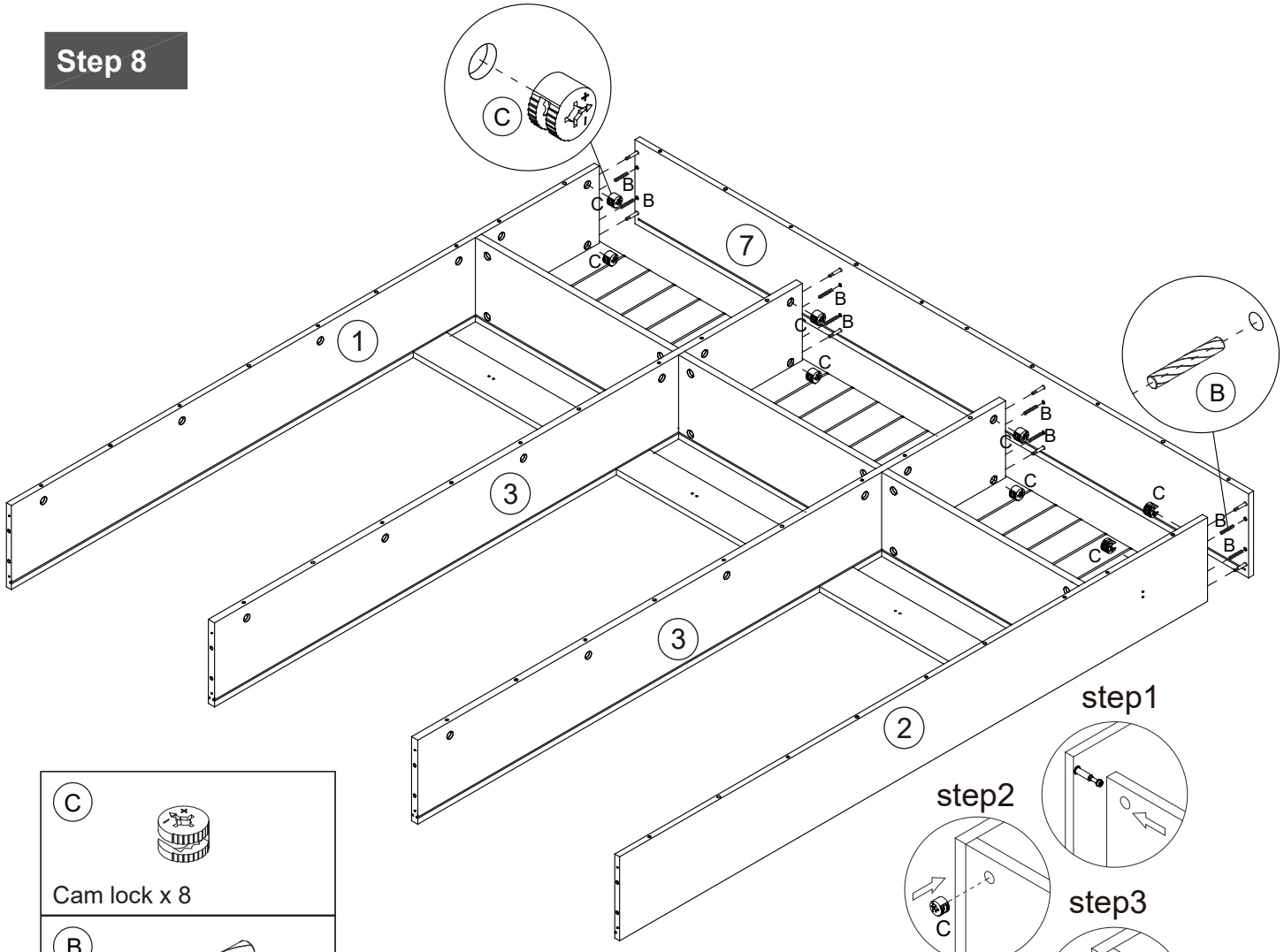

C

Cam lock x 8

B



6*30mm Dowel x 8

Assembly Instructions

Step 9

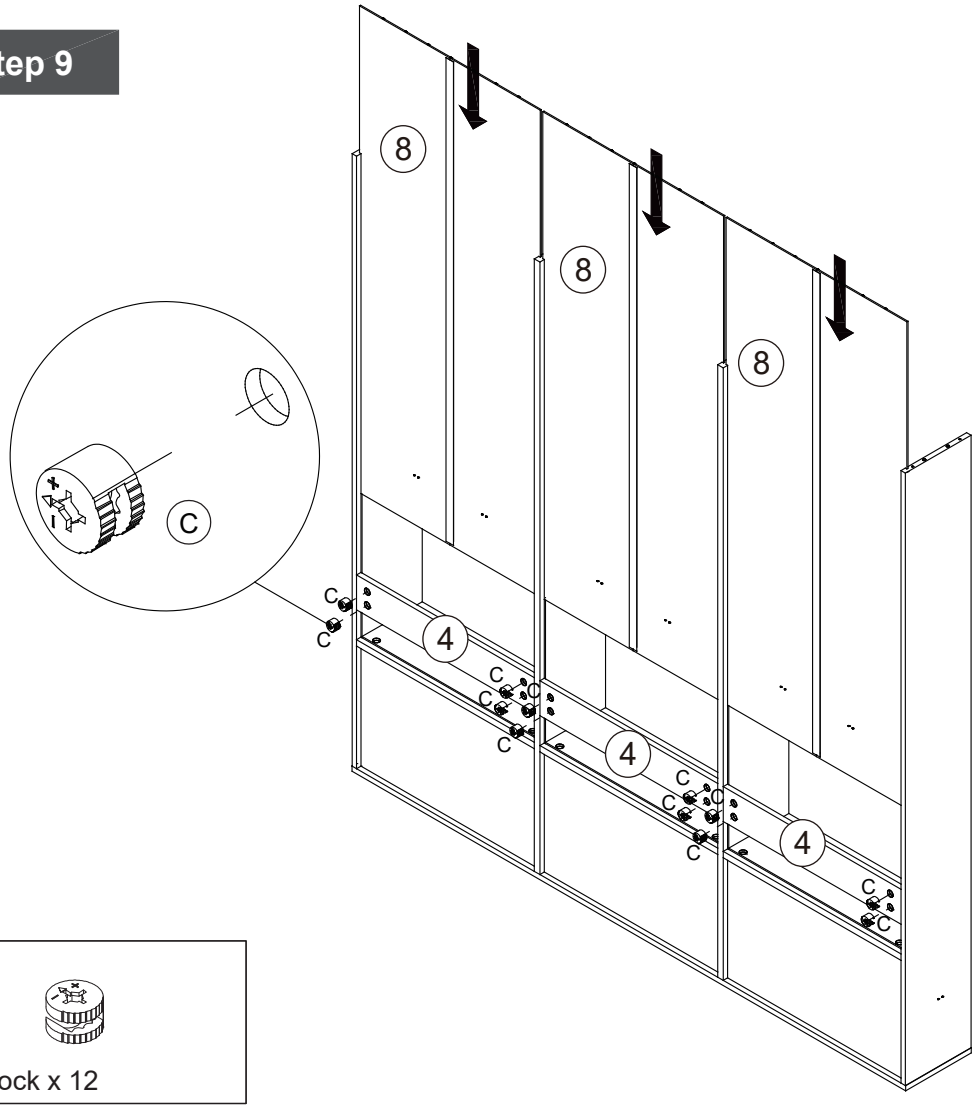

C

Cam lock x 12

Step 10

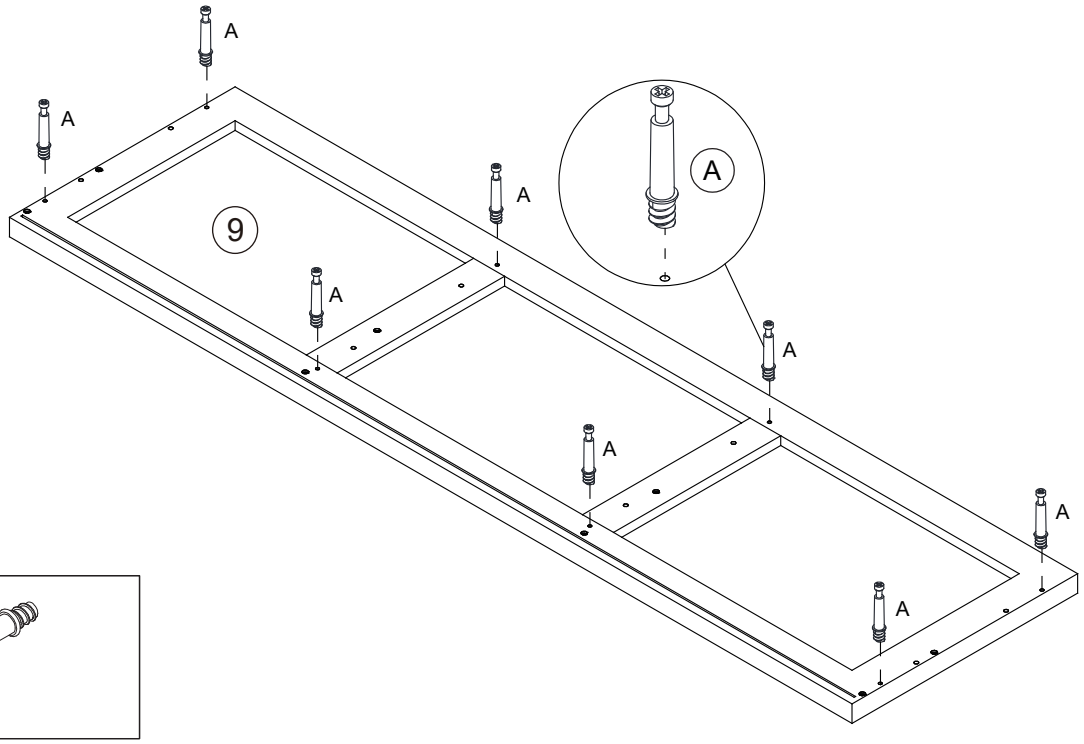

A

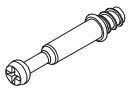

Cam Bolt x 8

Assembly Instructions

Step 11

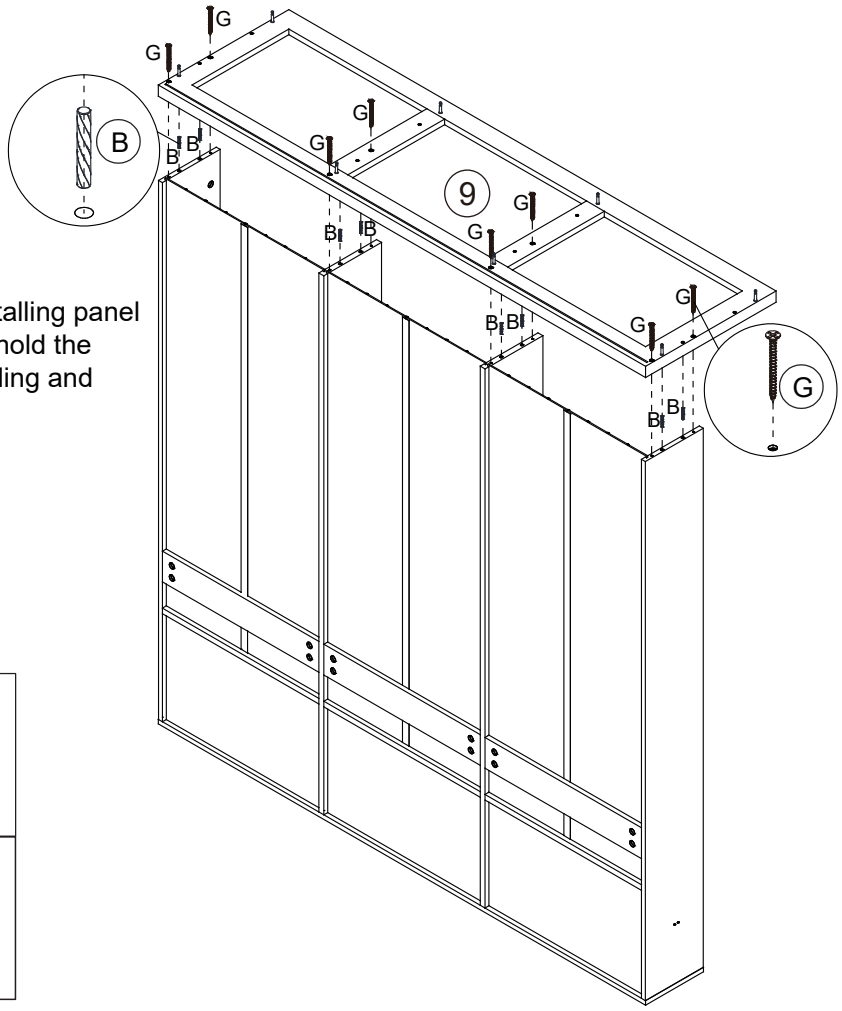

Please note that when installing panel No. 9, one person should hold the panel to prevent it from falling and injuring people.

G



4*40mm Screw x 8

B



6*30mm Dowel x 8

Step 12

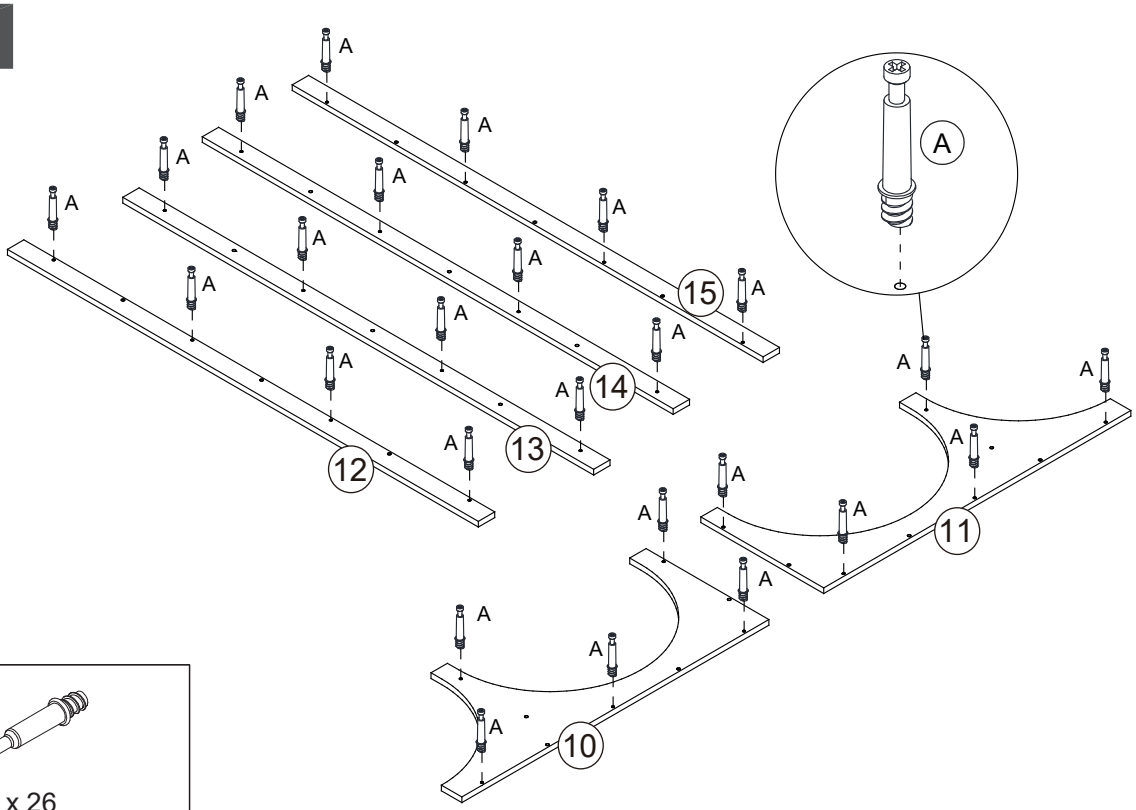

A

Cam Bolt x 26

Assembly Instructions

Step 13

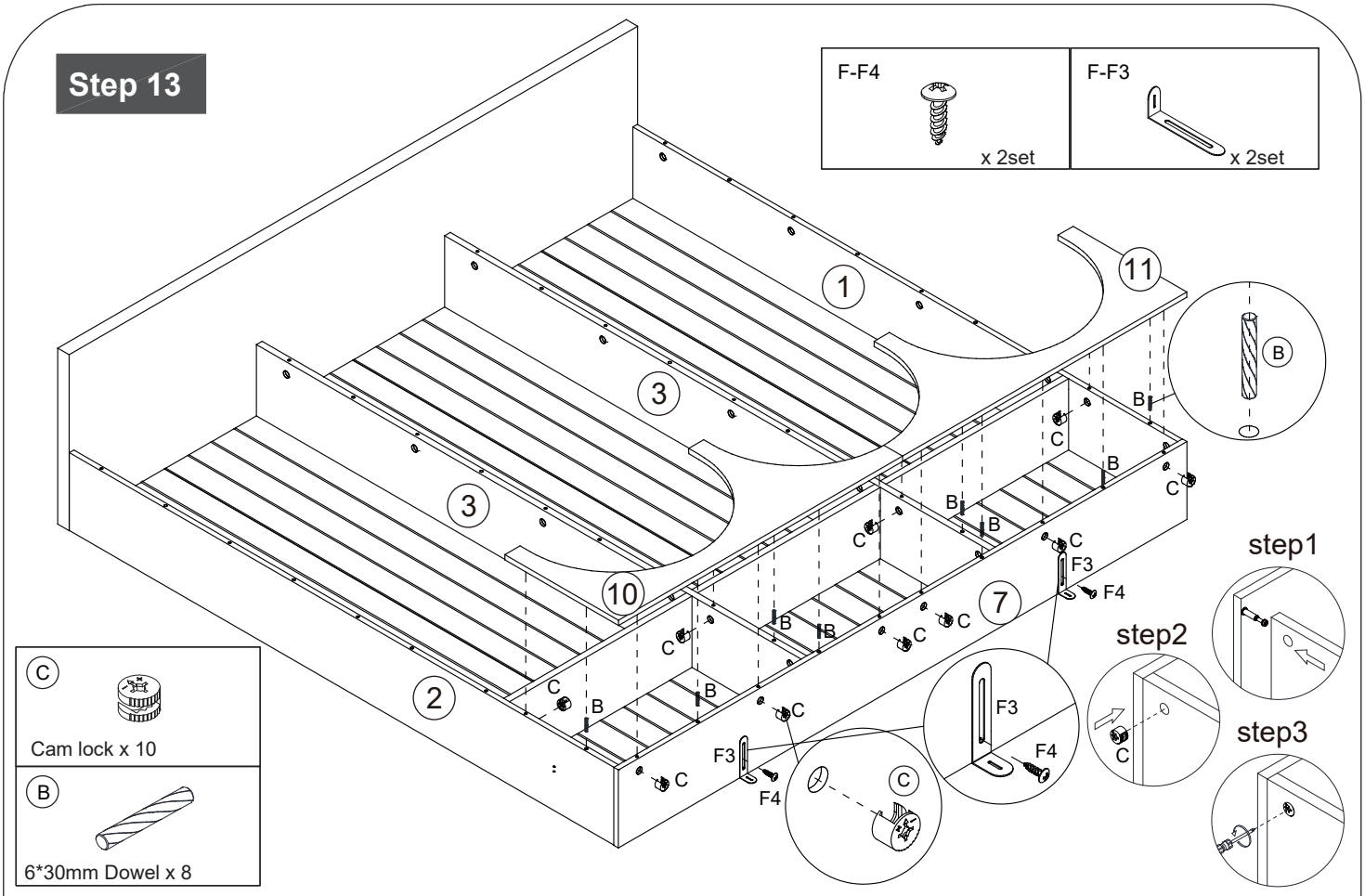

C
Cam lock x 10

B
6*30mm Dowel x 8

Step 14

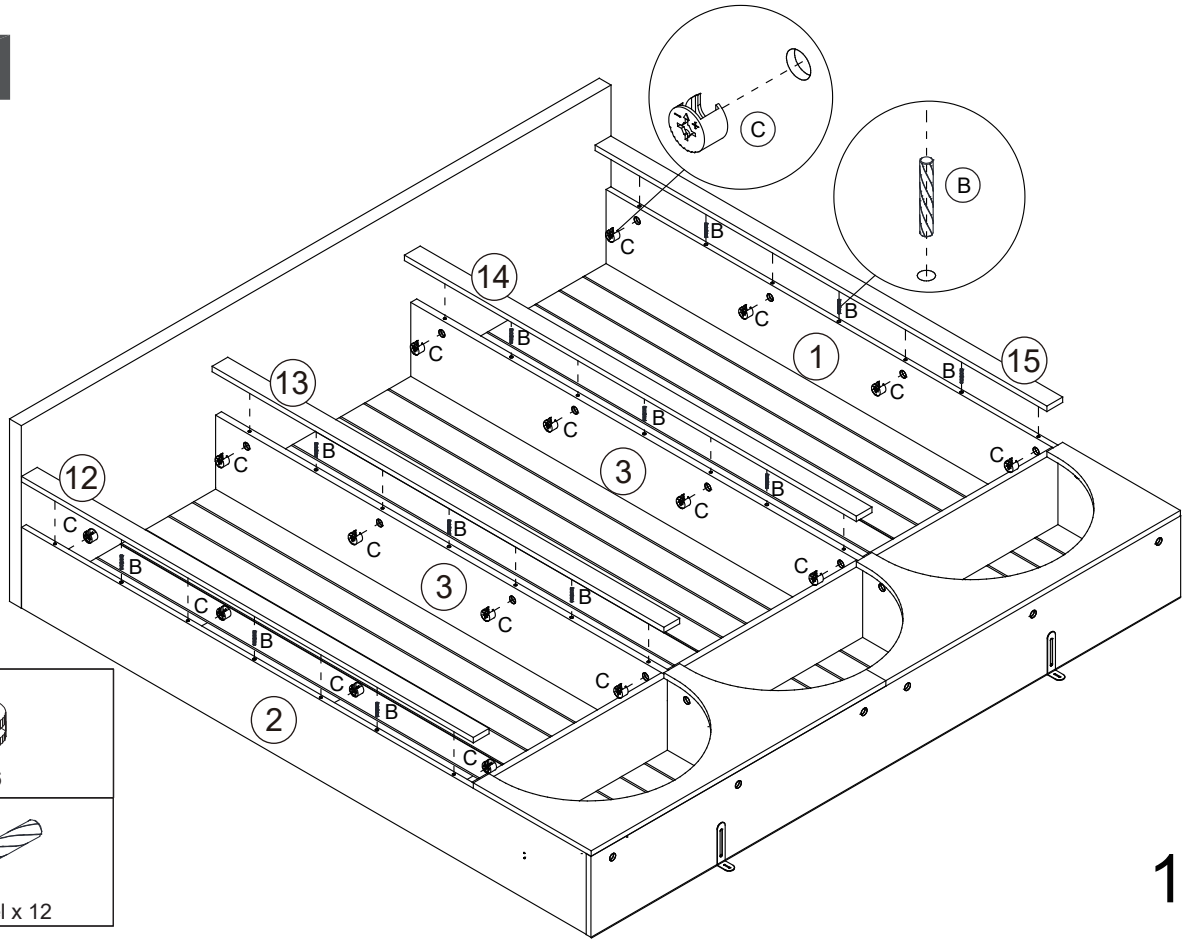

C
Cam lock x 16

B
6*30mm Dowel x 12

Assembly Instructions

Step 15

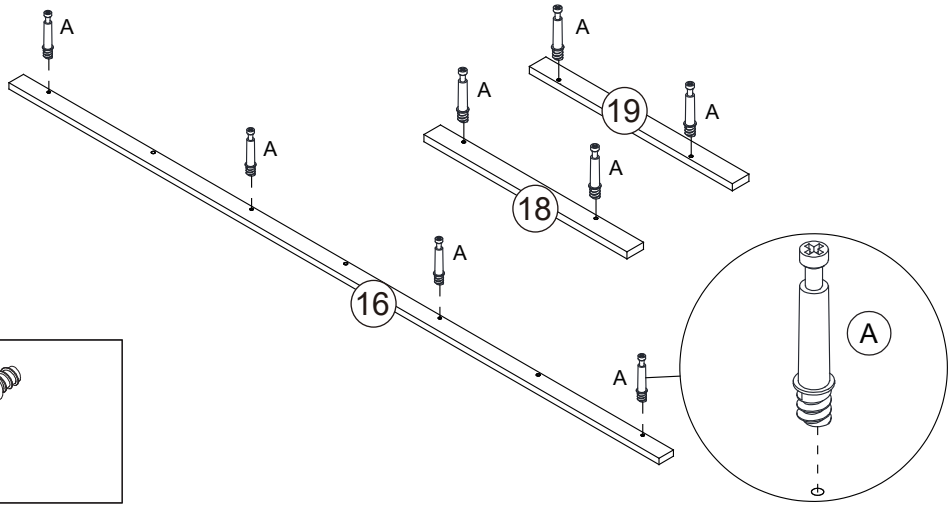

A

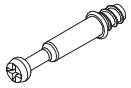

Cam Bolt x 8

Step 16

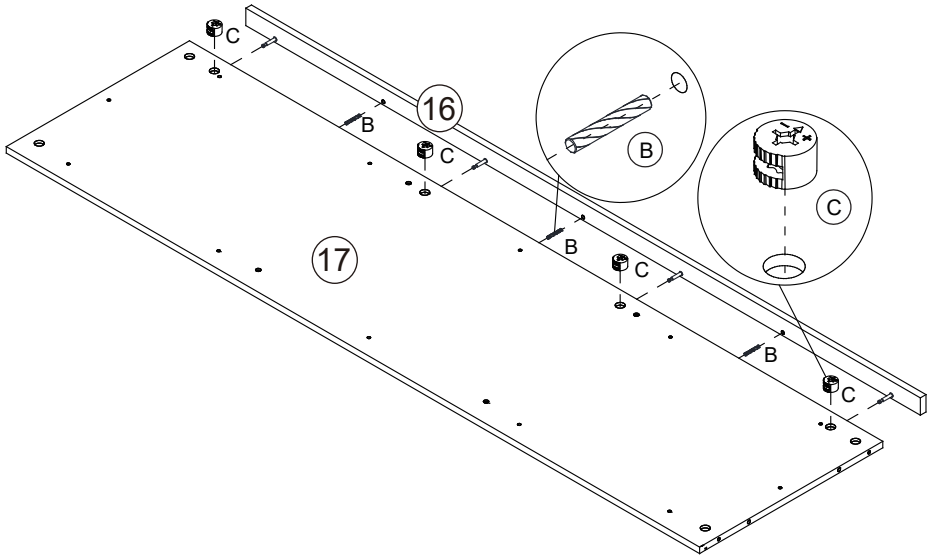

C



Cam lock x 4

B



6*30mm Dowel x 3

Step 17

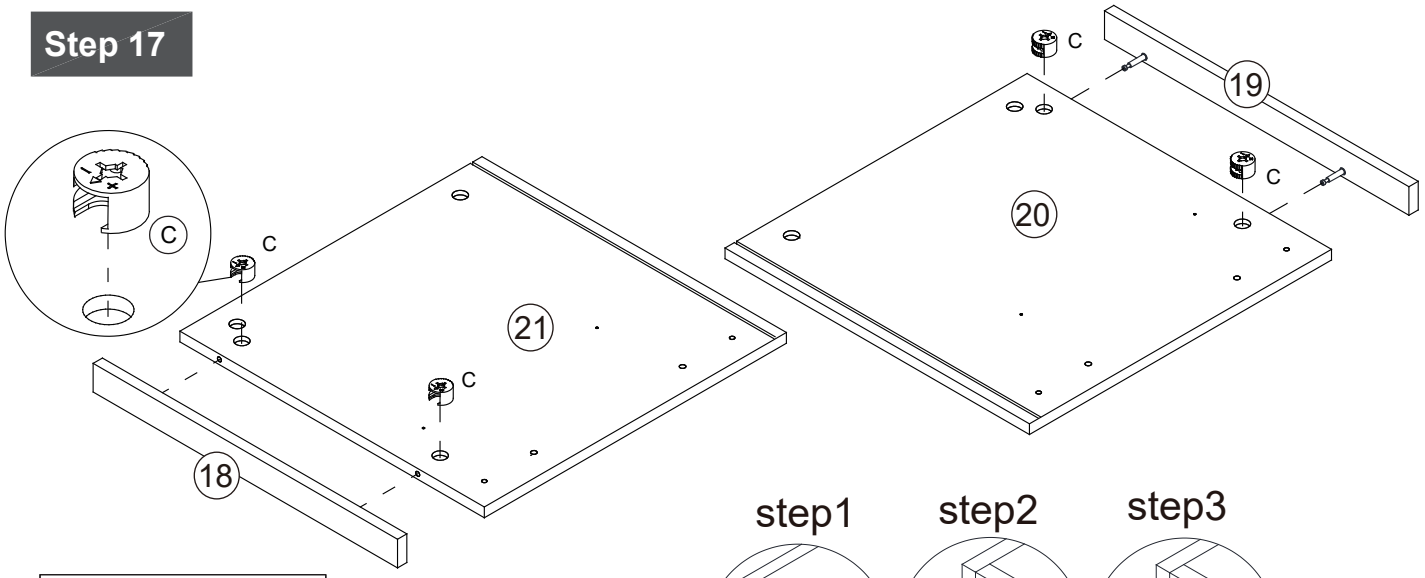

C



Cam lock x 4

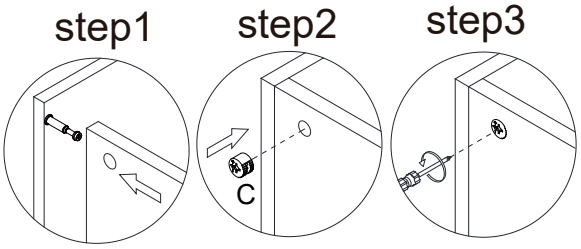

Assembly Instructions

Step 18

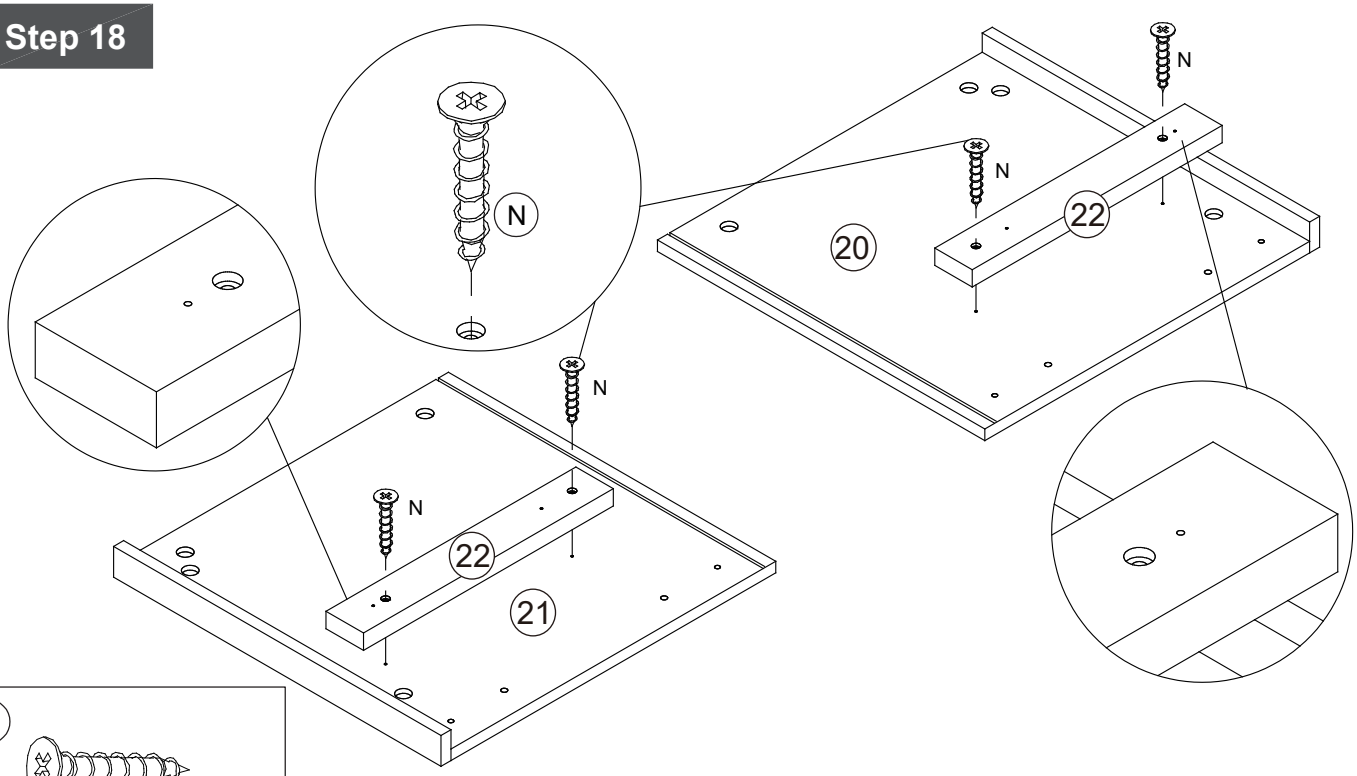

N

4*25mm Screw x 4

Step 19

x6

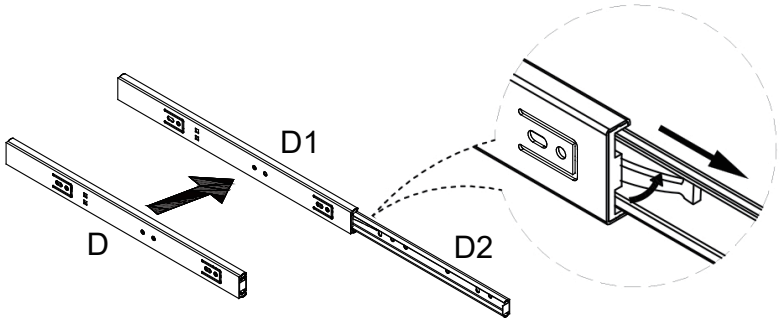

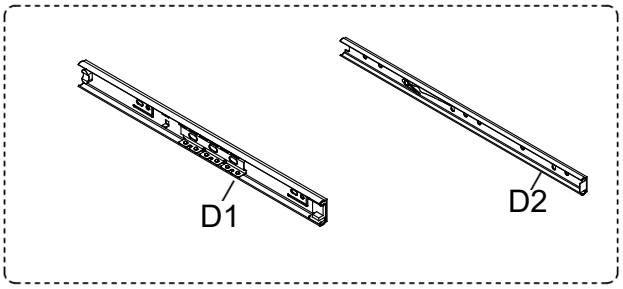

Assembly Instructions

Step 20

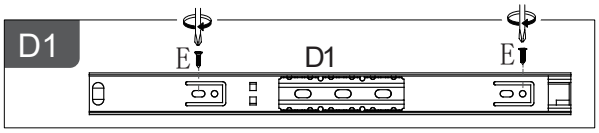

Step 21

Both sides of the part#23 need to be installed with slide

x2

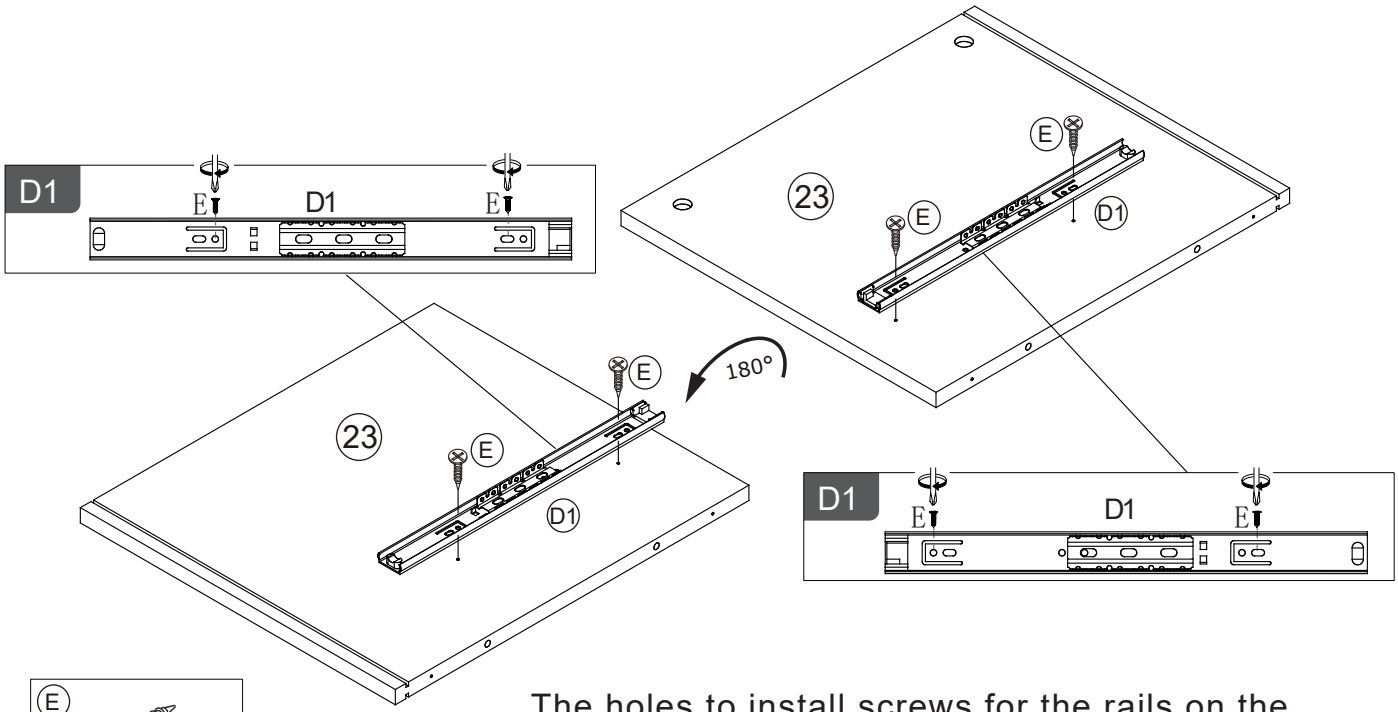

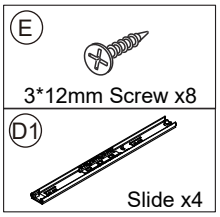

The holes to install screws for the rails on the two sides of the board 23 are different. Please refer to the markings in the figure.

Assembly Instructions

Step 22

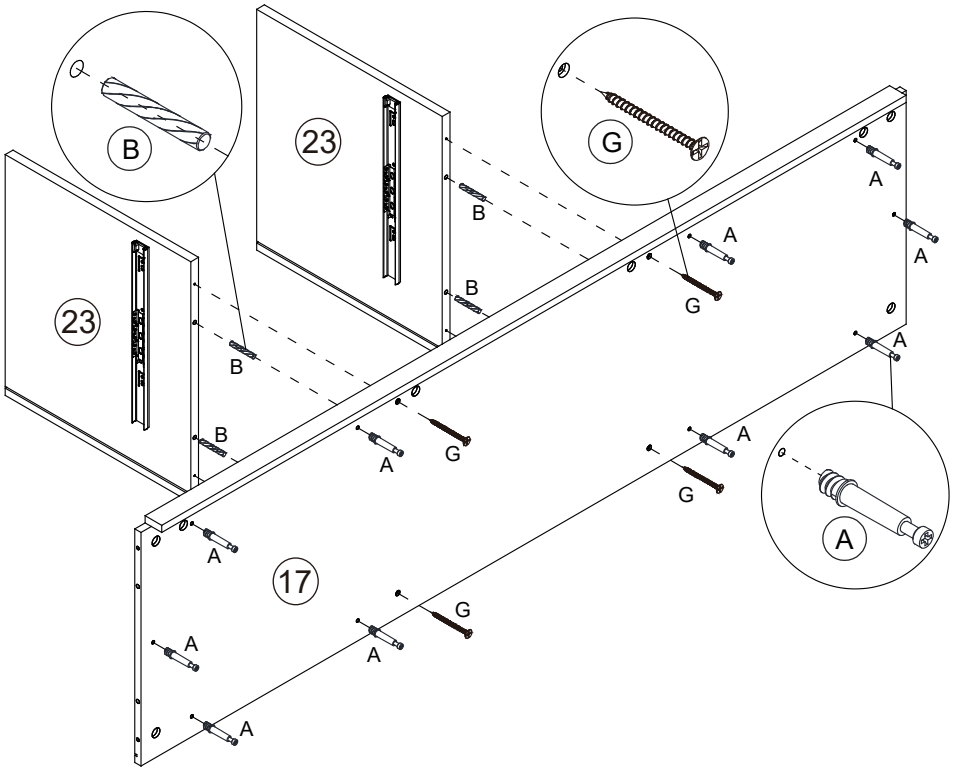

A	Cam Bolt x 10
G	4*40mm Screw x 4
B	6*30mm Dowel x 4

Step 23

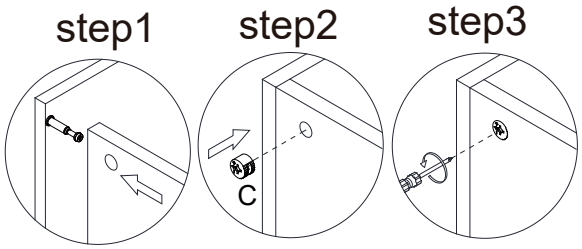

C	Cam lock x 4
B	6*30mm Dowel x 4

Assembly Instructions

Step 24

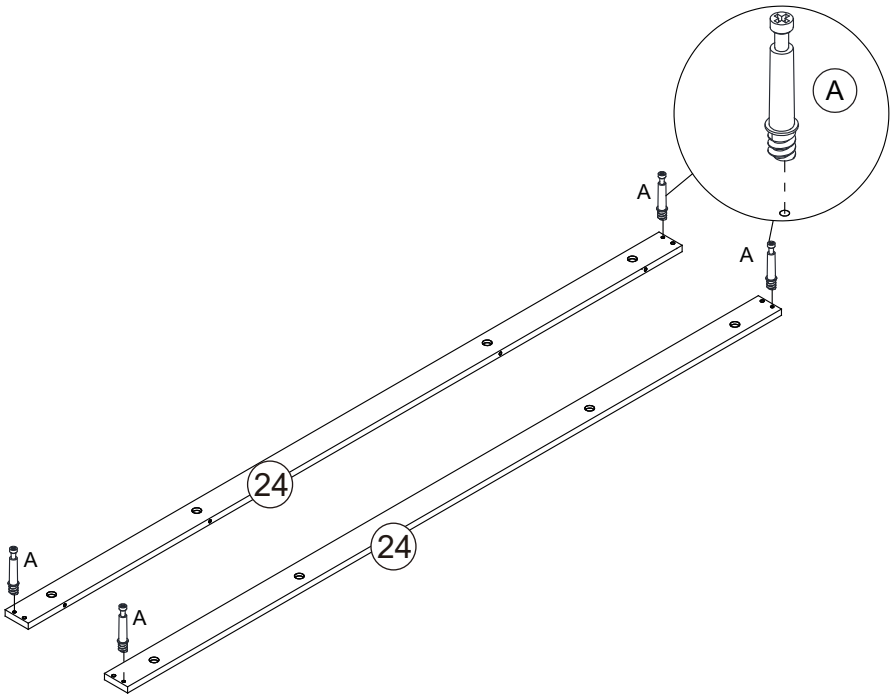

A

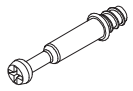

Cam Bolt x 4

Step 25

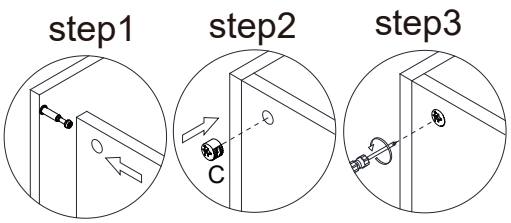

C

Cam lock x 4

B



6*30mm Dowel x 4

Assembly Instructions

Step 26

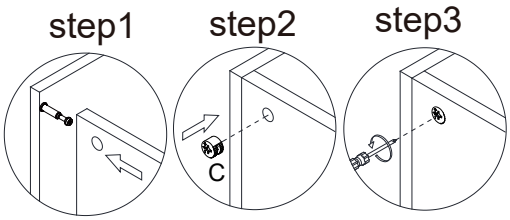

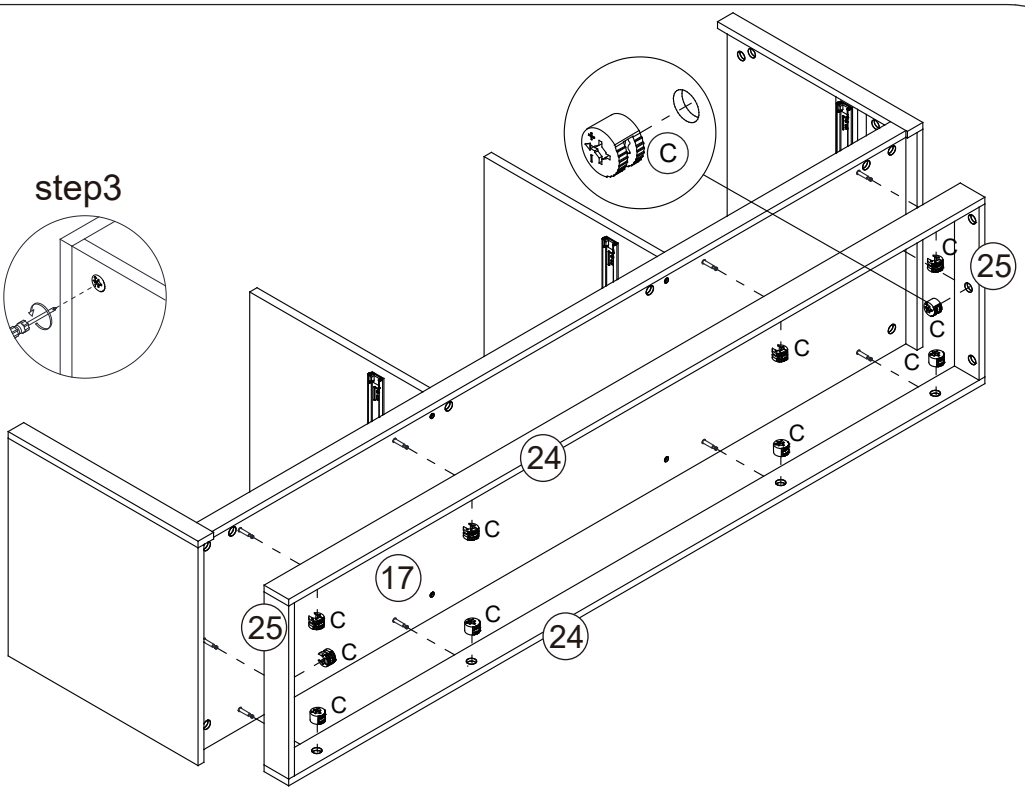

Step 27

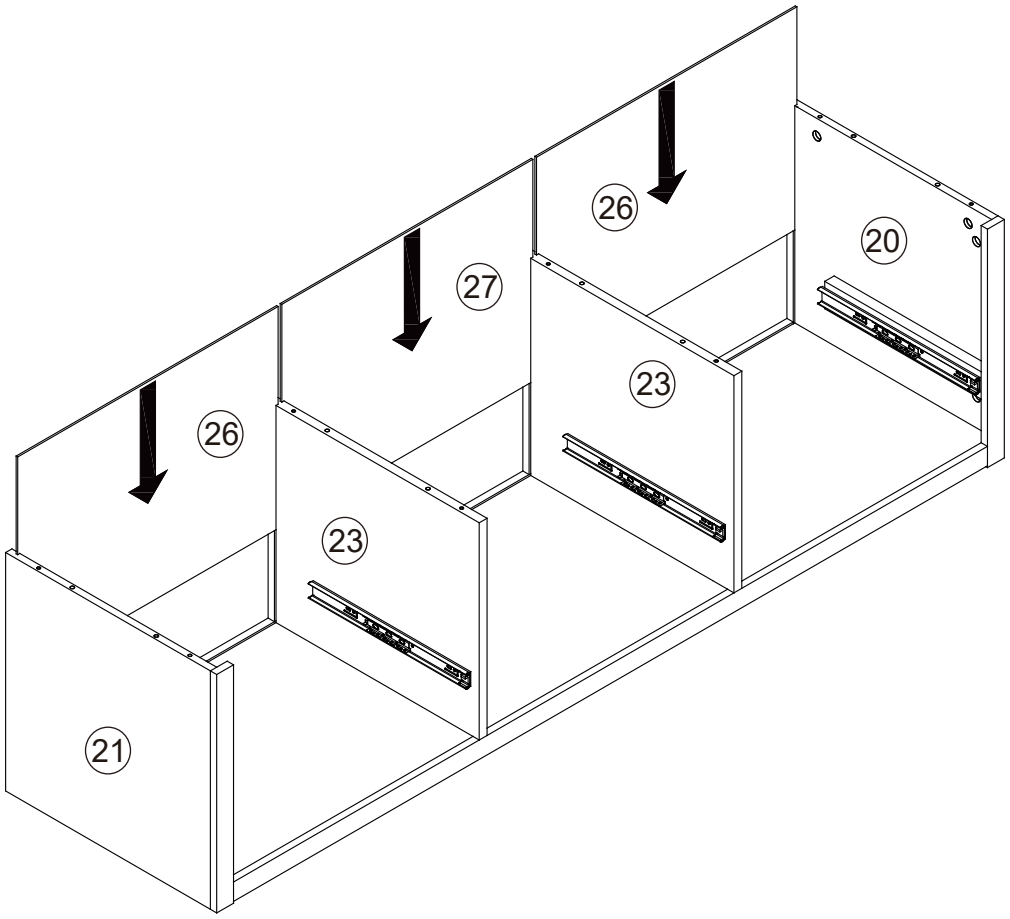

Assembly Instructions

Step 28

2-Person Assembly

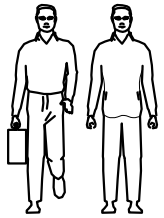

Please note that this step requires two - person cooperation for installation.

step1

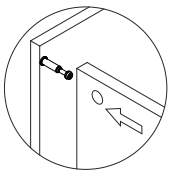

step2

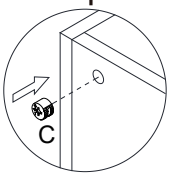

step3

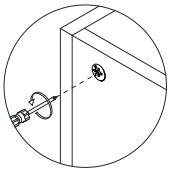

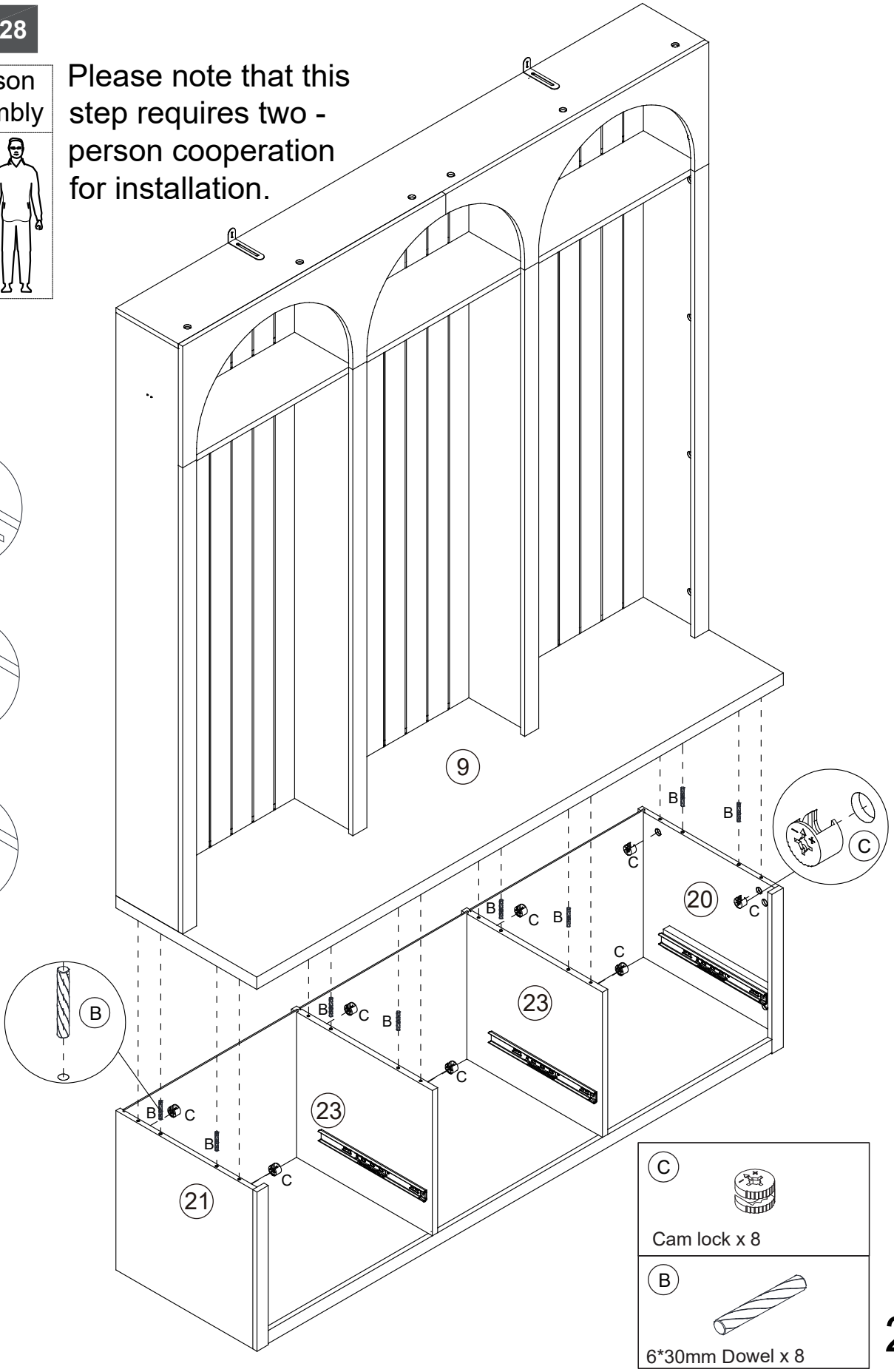

C

Cam lock x 8

B

6*30mm Dowel x 8

Assembly Instructions

Step 29

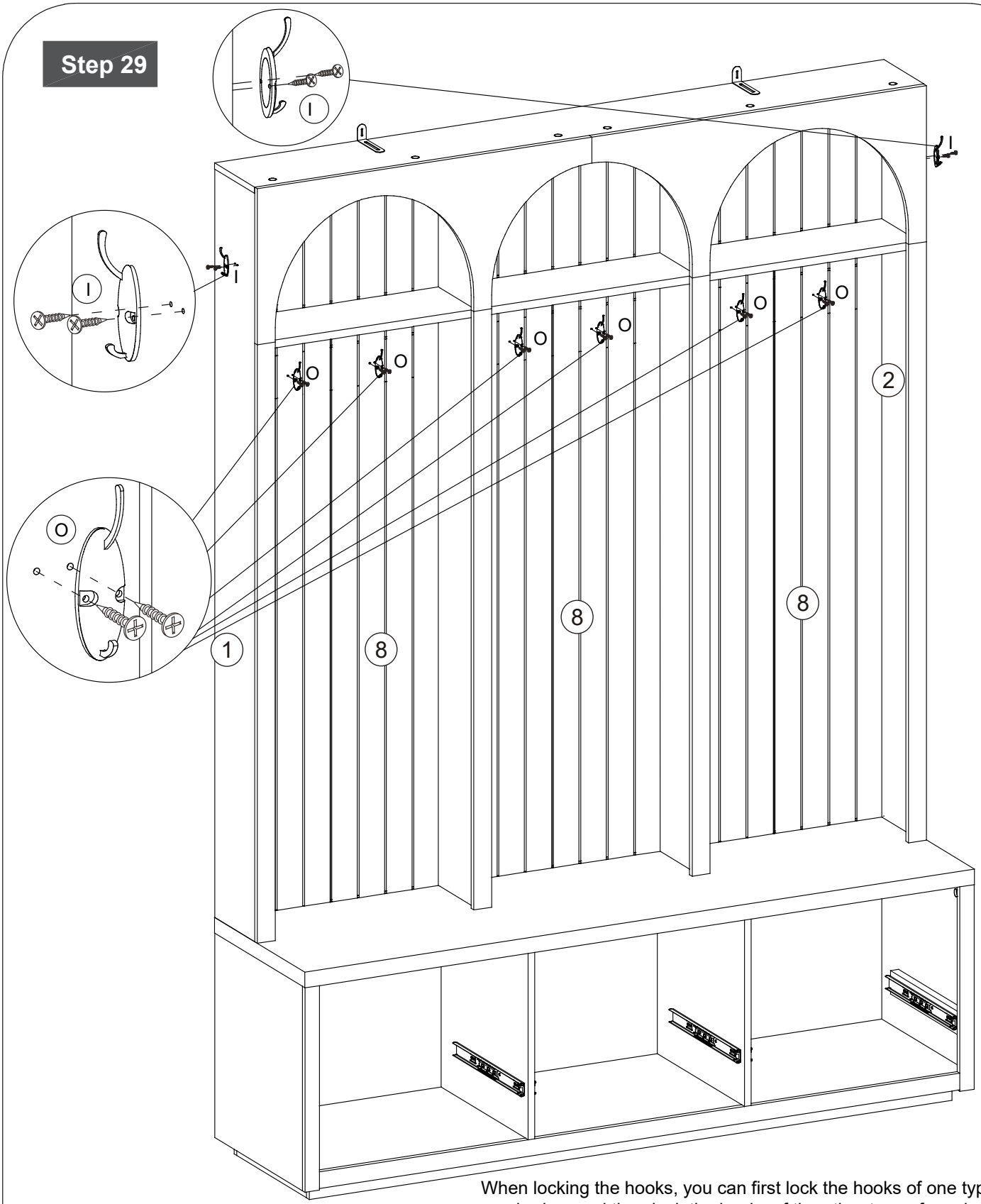

When locking the hooks, you can first lock the hooks of one type of numbering, and then lock the hooks of the other type of numbering. Pay attention to the fact that the lengths of the screws for the two types of hooks are different, so as to avoid locking them incorrectly.

O	I
	
3.5*16mm Hook x 6set	3.5*16mm Hook x 2set

Assembly Instructions

Step 30

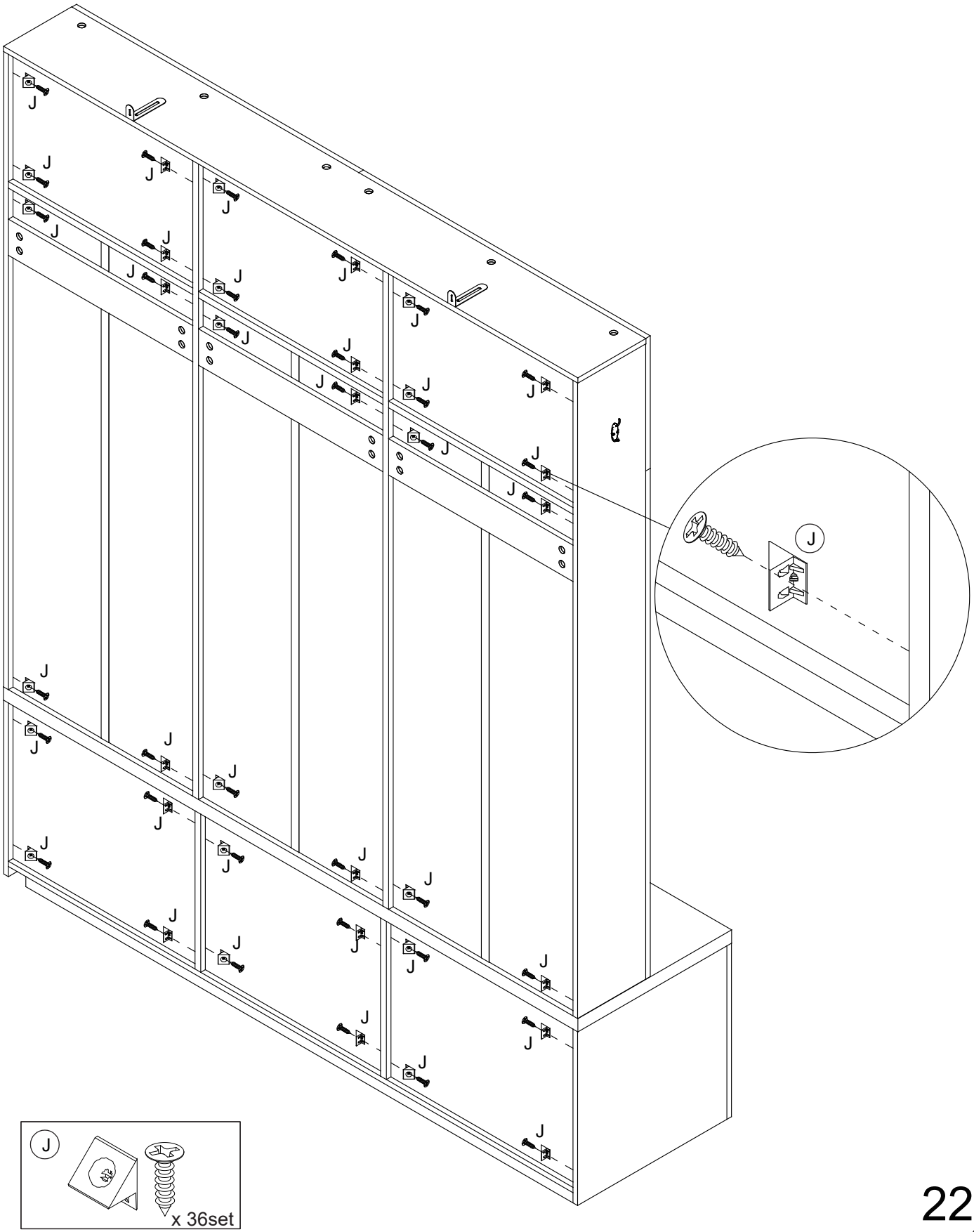
J
J
J

Assembly Instructions

Step 31

x3

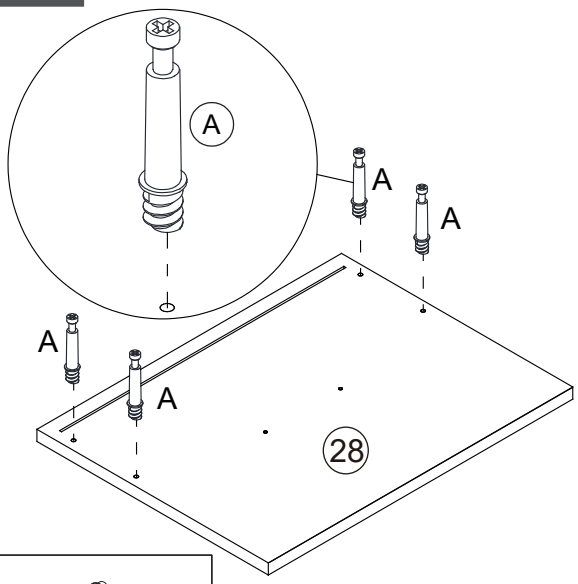

A

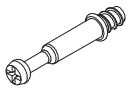

Cam Bolt x12

x3

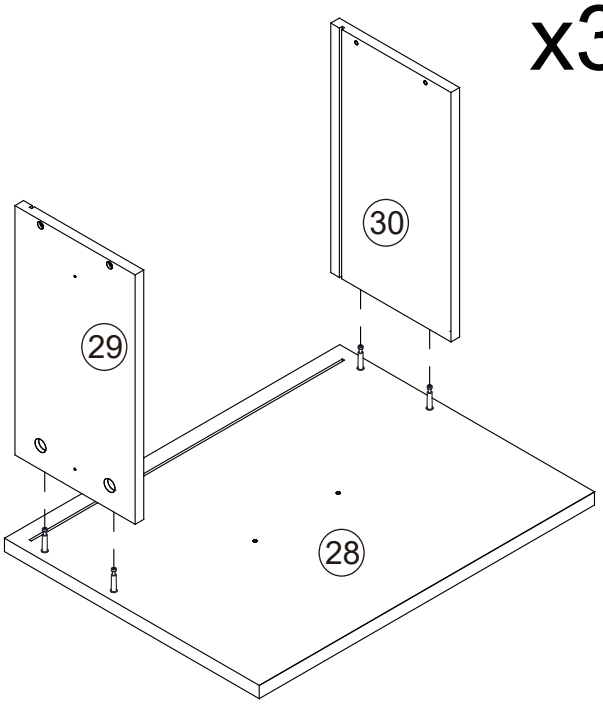

Step 32

x3

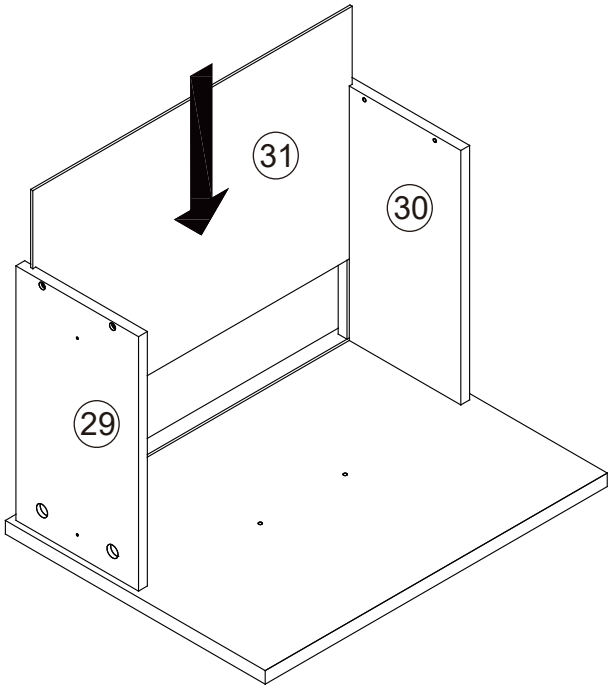

x3

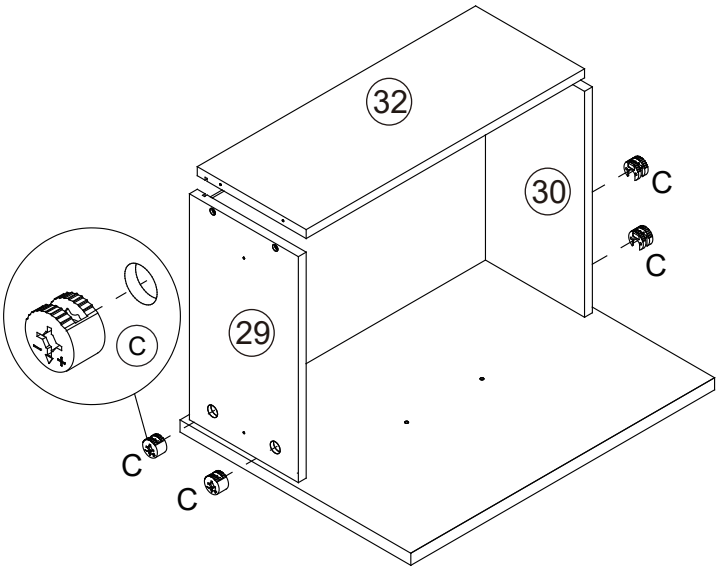

C



Cam lock x 12

Assembly Instructions

Step 33

x3

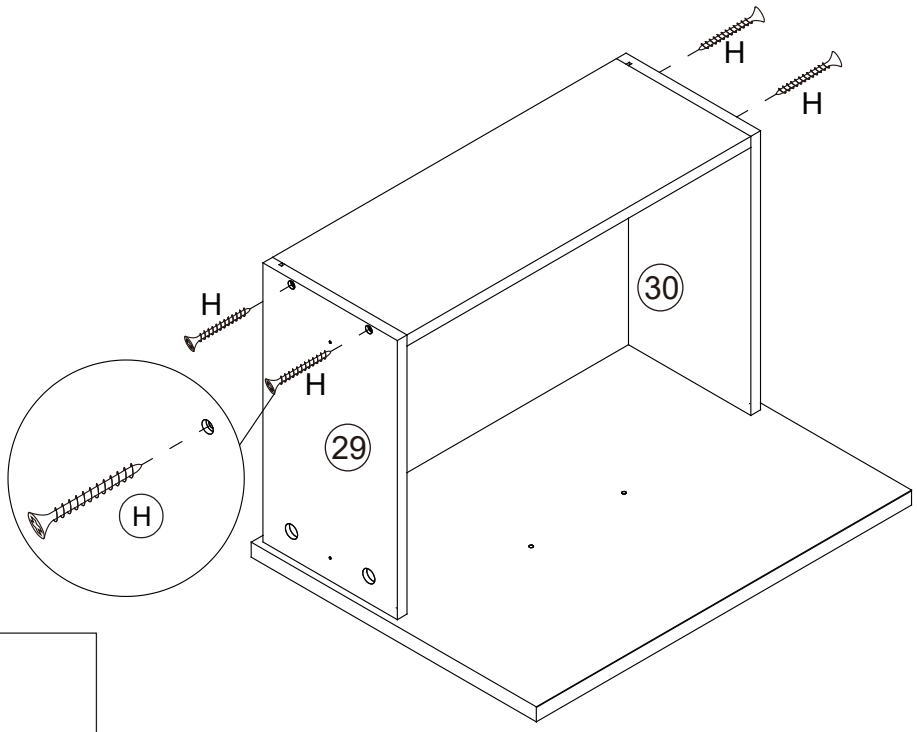

H

4*30mm Screw x 12

Step 34

x3

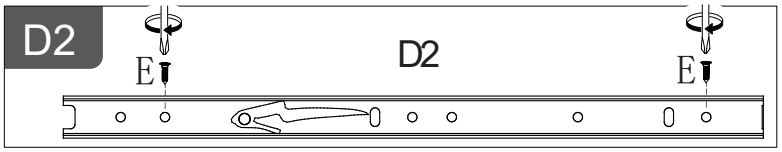

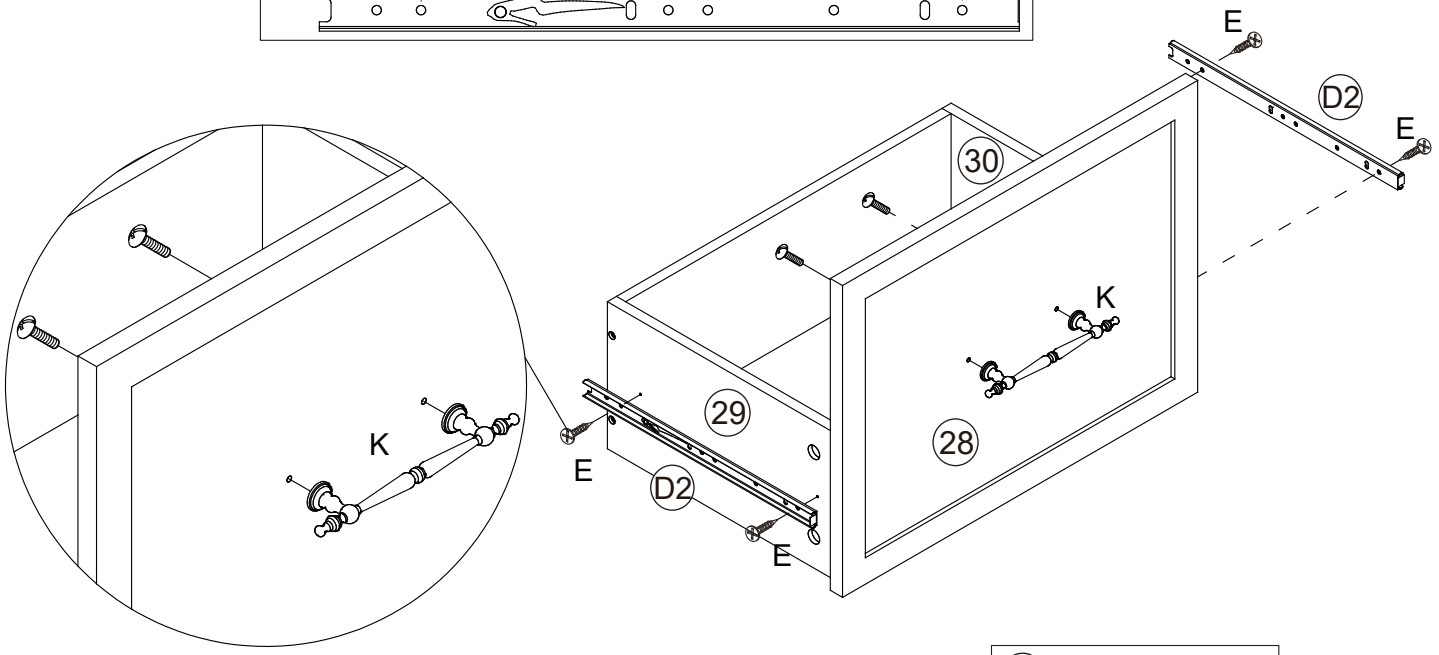

E

3*12mm Screw x12

K

4*16mm Handle x 3set

D2

Slide x6

Assembly Instructions

Step 35

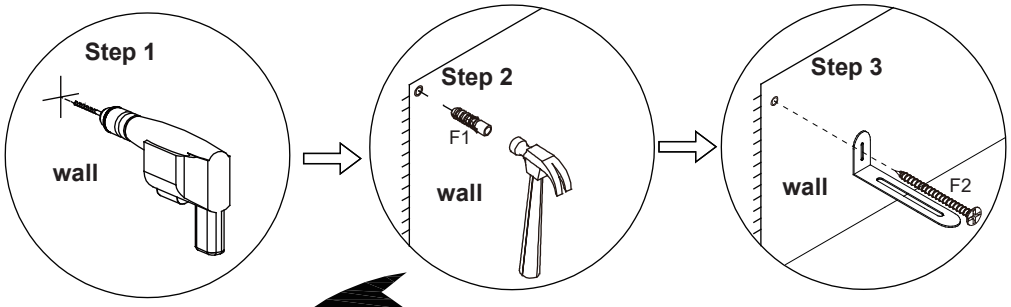

WALL

Please note that there are two colors of hole stickers. When pasting them, please select and paste the corresponding hole stickers according to the color of the board to avoid pasting them incorrectly.

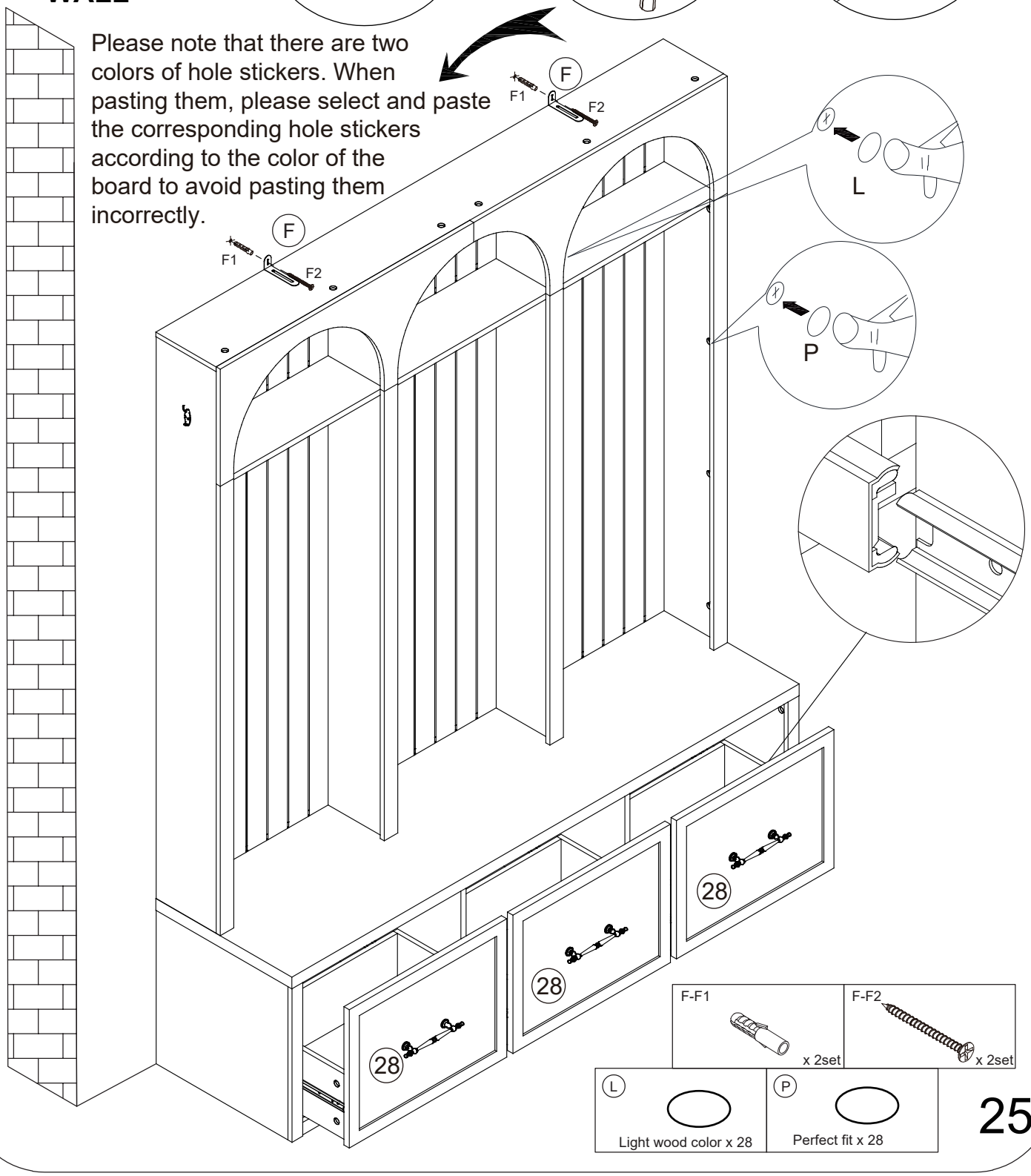

Assembly Instructions

Finish

