Instruction Manual



DREAMSIDEA

NO.CS0007-ARM CHAIR

NOTICE

THE PILLOWS ARE FILLED WITH CUT SPONGE,
WHICH IS A PRODUCING TECHNIQUE.

WE PROMISE THAT ALL RAW MATERIALS

USED ARE BRAND NEW, SAFE TO USE,

AND IN ACCORDANCE WITH LAWS AND REGULARTIONS,

WILL NOT EFFECT THE QUALITY AND SAFETY.

WE RECOMMEND ASK FOR PROFESSIONAL HELP IF NEEDED,

AND WE ALSO PROVIDE INSTALLATION VIDEO WITH THIS INSTRUCTIONS,

PLEASE CHECK THE STEPS CAREFULLY BEFORE YOU START.

IF YOU HAVE ANY QUESTIONS,

PLEASE FEEL FREE TO CONTACT US ANYTIME.

HAVE A GREAT DAY!

Please Note:

Hey there! You might notice the sofa on the cover isn't an exact match. That's because this manual works for the whole family of sofa underneath. Grab your tools, follow the steps, and have fun adding a new member to your furniture family!

Fabric: corduroy





Fabric: cotton flannel





Fabric: chenille



Other Upholsteries are Still Updating

ITEM NO.CS0007- ARM CHAIR

WARRANTY

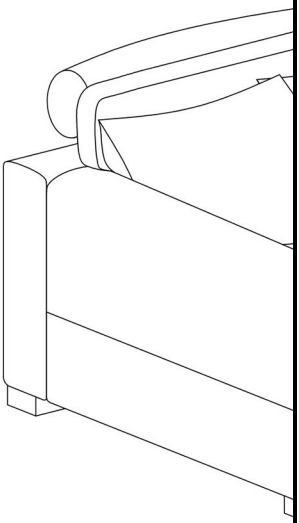

We strive to offer high quality product and we also try our best to satisfy each customer that order from us, no matter on products or services as needed. Each customer receives a record of their order, such as the order number or item receipt. For any items that are out of warranty period, you may still be able to purchase the replacement parts from our company if they are available.

Are you having difficulty
with assembly? Missing parts?
Please contact us : info@firstopintl.com
Tel:(562)-781-3327
send an email with your order No. to us
For return, please check the return policy with the retailer or platforms you bought from.
Appreciate your purchasing from us.
Pop up your life by our furniture !

MAINTAINANCE AND WARNING

Please read the manual thoroughly before you start installing.

Please keep the product away from sharp object.

Packaging and small parts may have chocking hazard, please keep them away from children and pets.

Please clean the product according to each clean code, check the product description for more information.

Please keep the product away from fire.

If you have any other questions, please contact us, we will be glad to help you out.

If the product is placed under direct sunlight, the pattern or color might fade away overtime.

Check the product periodically to make sure everything is secured and tightened.

Always use proper tools for installation.

Do not jump on the product.




Two people




Around 35 min

PRODUCT DESCRIPTION

Comfortable sectional sofa: made of corduroy/chenille/cotton flanne and sturdy wooden frame, ensuring durability and stability. Seat cushion is equipped with high density foam and durable inner

Adjustable headrest: enjoy personalized comfort with adjustable headrest design, supports the neck and providing optimal relaxation.

Detachable cushion and washable covers: Easily clean the detachable cushion and covers by using the zipper on them to take off and wash or replace

Wide seats: enlarged cushions are perfectly for sitting, both frames and cushions are increased in size, allowing you to rest your whole body while using this sofa.

Easy assembly process: where all parts are labeled with letters or numbers indicators for simple steps completion.

EXPLODED VIEW

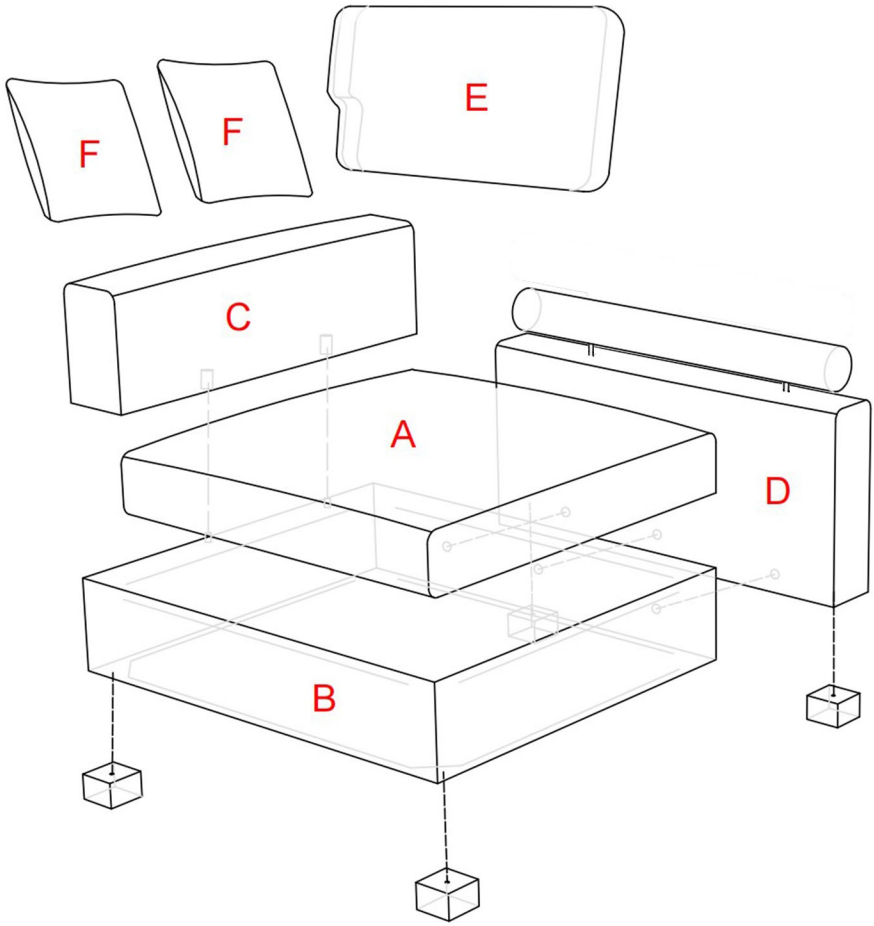

PARTS

A*1

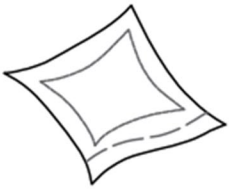

Seat cushion packed in compression bag

B*1

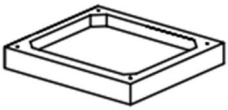

Sofa frame

C*1

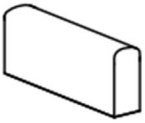

Armrest frame

D*1

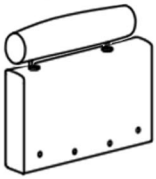

Backrest frame

E*1

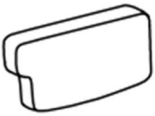

Back cushion

F*2



Pillows

HARDWARE

TOOL LIST

NOTE: Designated with (★) We provide additional spare parts in the hardware package

H*4



Legs

I*6



★ Bolts

J*1



Allen key

K*1

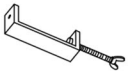

HOOK

L*6



★ Flat washer

M*6



★ Spring washer

Please make sure all hardware&packing material fitting the list. Especially some small accessories may be missing during transportation. Please contact us if you have any question.

step 1 ---Cut the plastic air compression bags

Take out the roll of compressed cushion from the box.
Cut open the compression bag along the paper strip on the roll bag. Full recovery may take up to 48 hours, but you can gently slap the sofa to speed up the process.

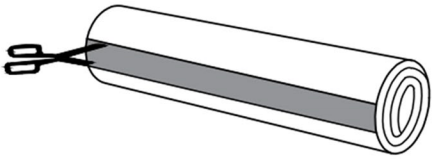

Use care when opening the bag to avoid injury from sudden expansion. Keep away from face and body while cutting.

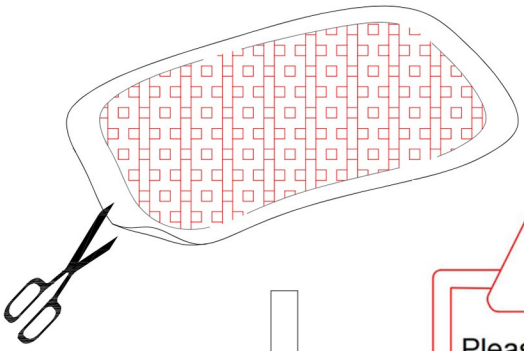

Please exercise caution when opening the packaging to avoid injury or damage to the product.

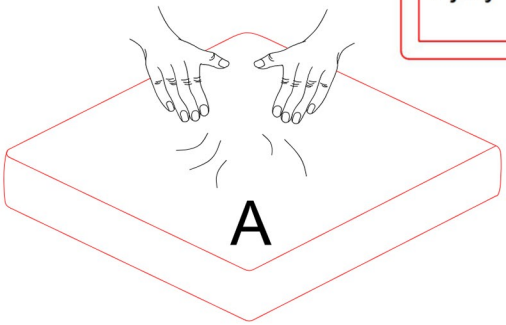

step 2 ---Cut the plastic air compression bags

Cut the plastic air compression bags, and take out the cushion (E&F). Let it recover to its original shape, the whole recovery process might take 48 hours, you may gently slap on it to speed up the process.

Please exercise caution when opening the packaging to avoid injury or damage to the product.

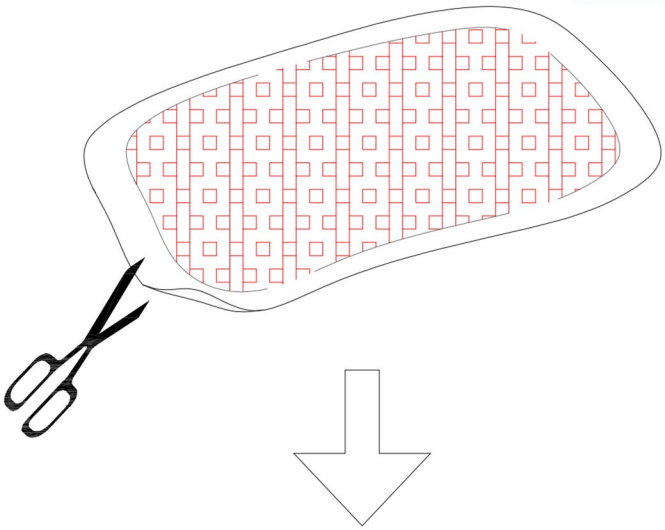

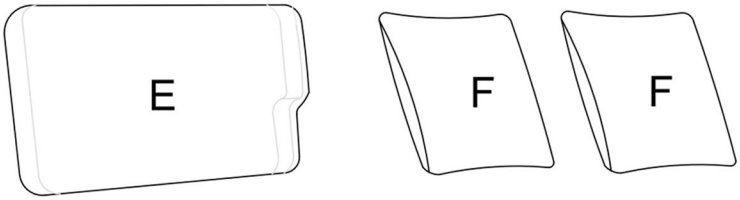

step 3 ---Attach the Sofa frame (B) to Backrest (D)

Place the sofa frame (B) on its side as shown, then align the screw holes on the backrest (D) with the screw holes on the sofa frame. Use the allen key (J) provided to tighten each screw with one spring washer (M) and one flat washer (L), make sure they are all correctly aligned before fully tighten the screws.

Notice:
We suggest tightening the bolts for 30-50% first, make sure the process is correct and bolt holes are aligned, then fully tightening them all.

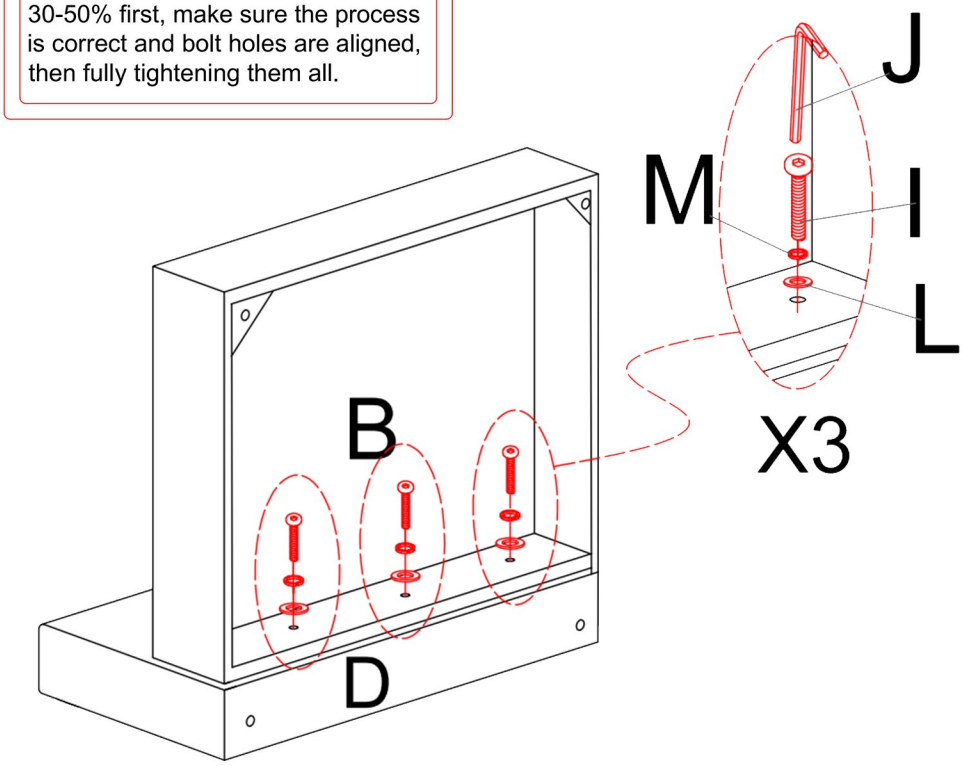

step 4 ---Install the Sofa legs (H)

Please remember to remove all the plastic caps off the sofa leg screws as shown. Flip over the sofa frame (B) as shown, then twist in all the legs (H) into each corner of the sofa frame, make sure they are all tightened.

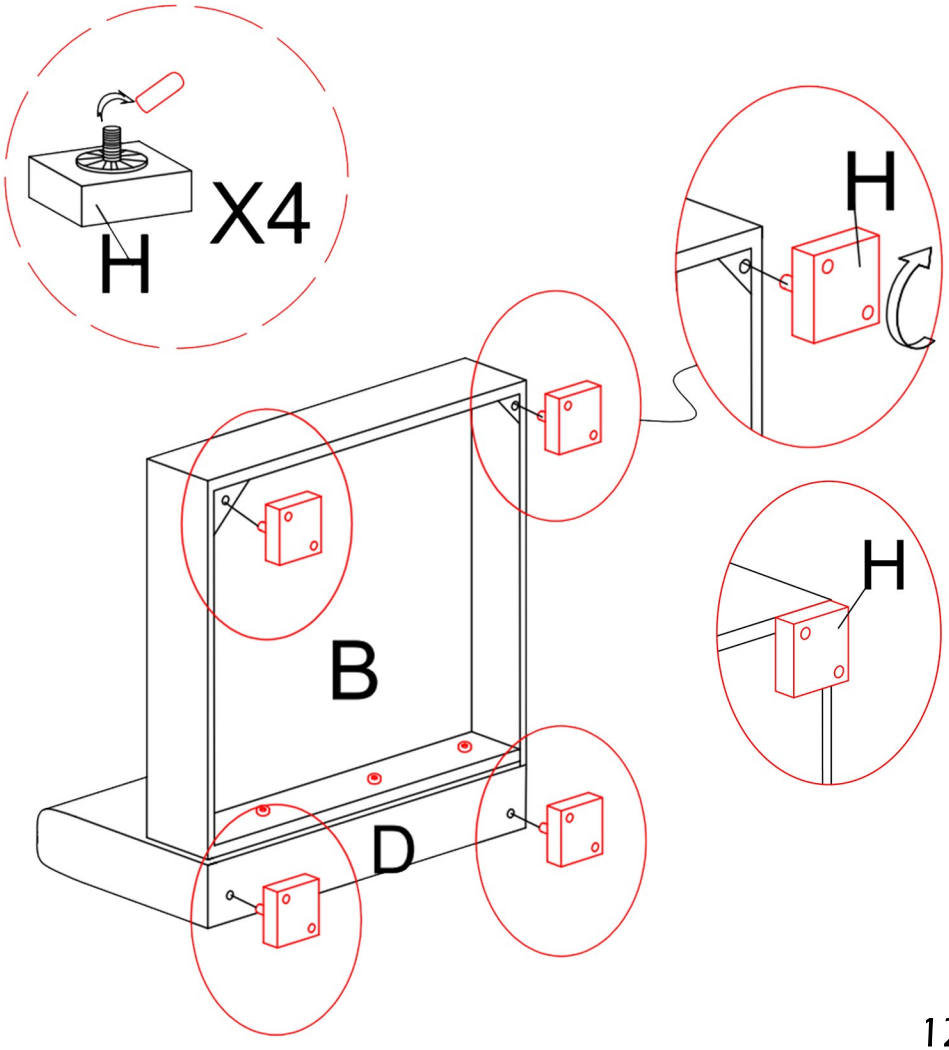

step 5 ---Install the Armrest (C)

Align the armrest frame (C) with the holes on the sofa frame (B) as shown, then use the allen key (J) provided to tighten each screw with one spring washer (M) and one flat washer (L) from the bottom. Make sure all the screws and holes are correctly aligned before fully tighten.

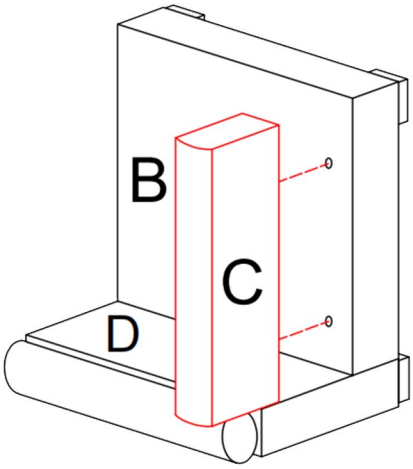

Notice:
We suggest tightening the bolts for 30-50% first, make sure the process is correct and bolt holes are aligned, then fully tightening them all.

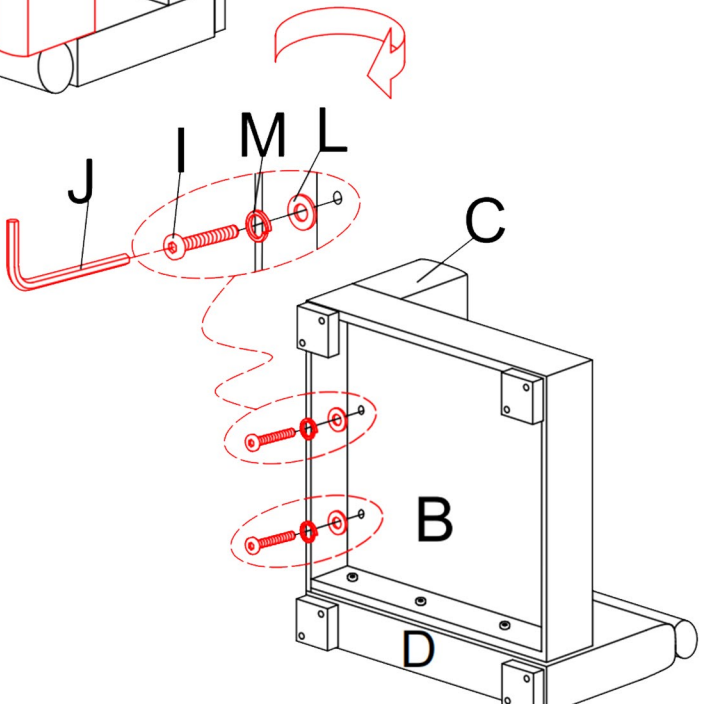

step 6---Install the Seat cushion(A)

Place the seat cushion (A) onto the sofa as shown.

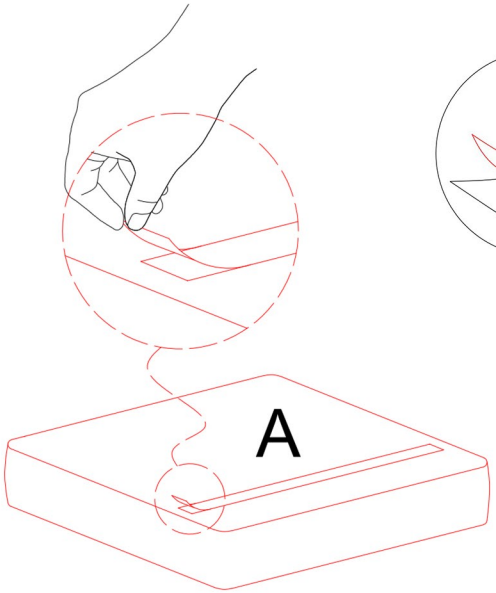

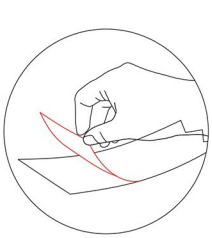

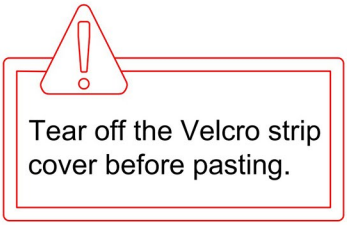

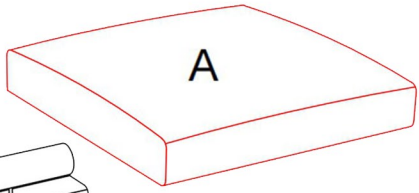

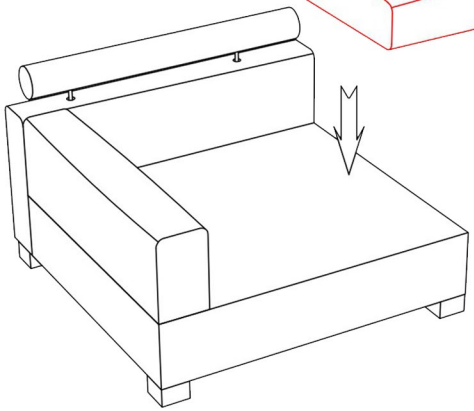

step 7 ---Place the Throw pillows (F) &Back cushion (E)

Place the throw pillows (F) onto the sofa as shown.
Place the back cushion (E) onto the sofa as shown.

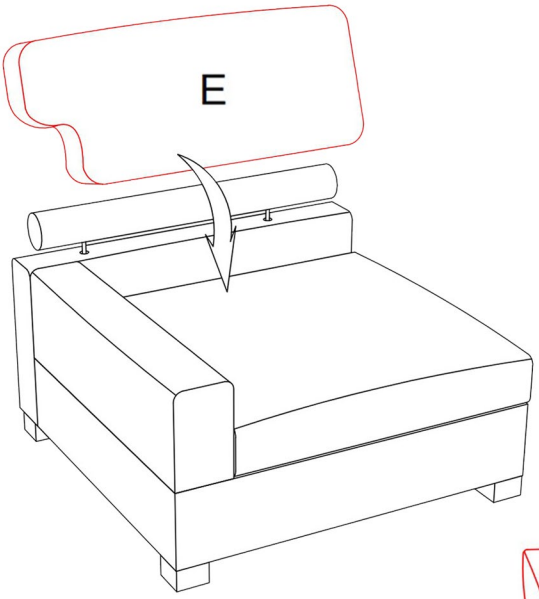

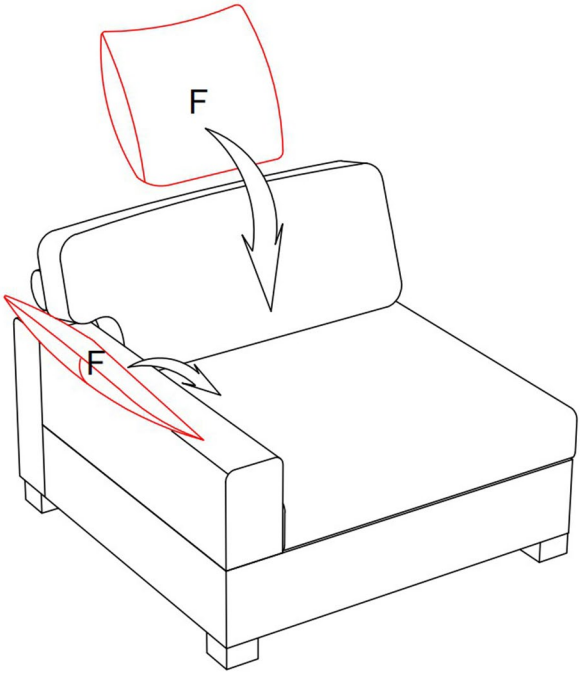

step 8 --Assembly complete

Congratulations! The assembly has complete! Thank you again for choosing our product, please enjoy!

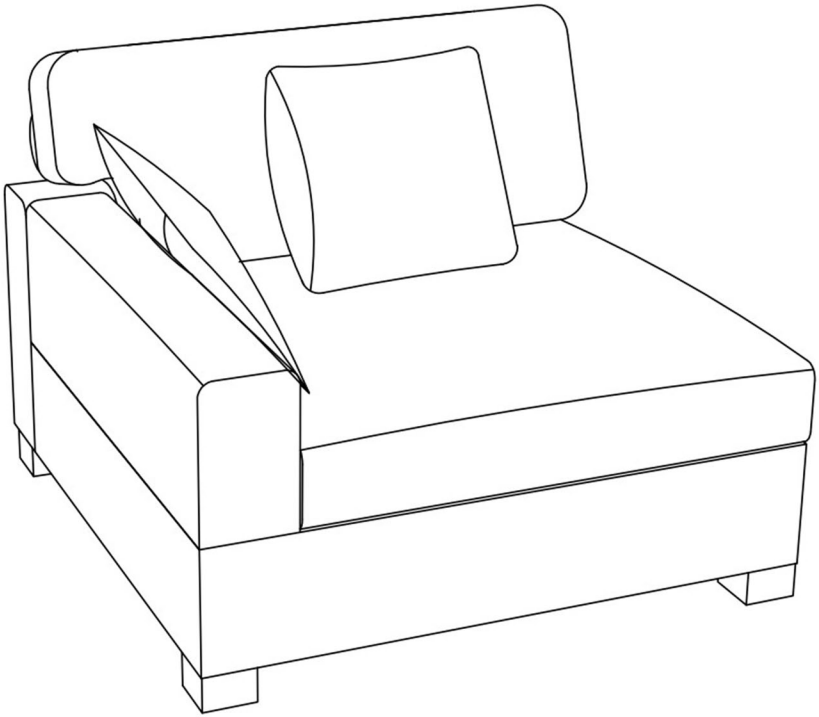

step 9

How to put Sofa Modules together.
This modular sofa has multiple combinations. Here, one of the combinations is shown.

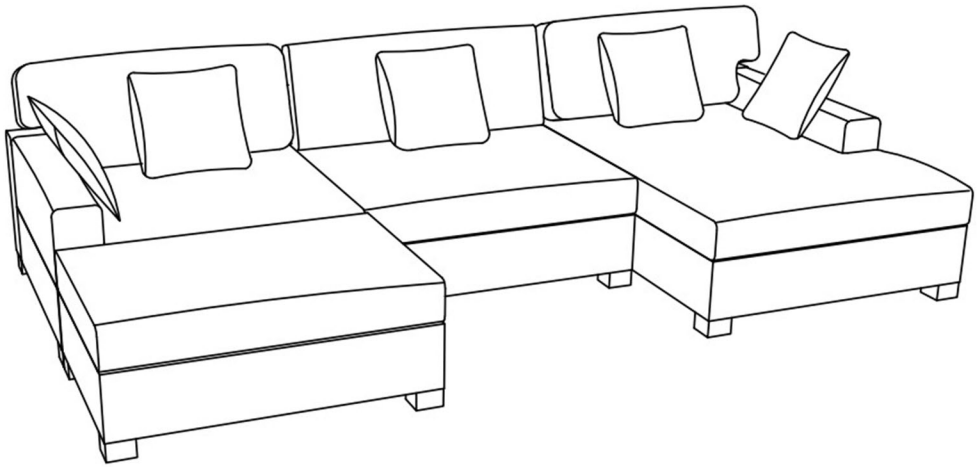

step 10 ---Install the Metal hook (K)

There is a metal hook inside the carton as a free part.
If you only purchased single part of the sofa, this hook will not be useful.
If you want to be combined with other sofa components (ottoman, chair, chaise etc), this hook can be used. Just use this hook to fix two parts together from the bottom to prevent displacement while using the products.

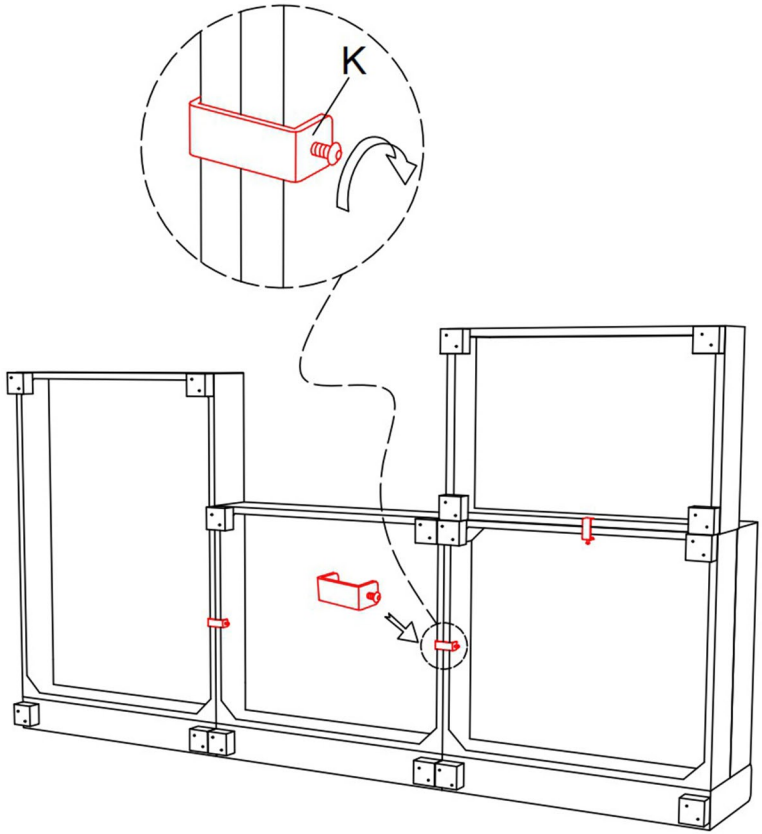



ASSEMBLY INSTRUCTIONS

Tel.(562)-781-3327

Please contact us:info@firstopintl.com

https://www.dreamsidea.com