Lift Recliner Assembly Instructions

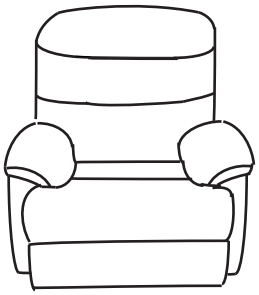

- Your recliner comes packaged in one box.
- **DO NOT** use any sharp objects to open plastic wrapped components as damage to product or components may result.
- Carefully remove all of the components from the packaging and set aside for assembly.
- Assemble on a soft surface to prevent scratching the finish.
- **Zip ties are used to secure your recliner cords and avoid damage - do not cut.**

Parts List

- A 1 x Seat 
- B 1 x Back 
- * C 1 x Power Kit 
- * D 2 x Legs 
- * E 4 x Bolts 
  M6 x 40mm

Hardware List

- * F 4 x Wing Nuts 
  M6
- * G 4 x Lock Washers 
  M6

* Replaceable Parts


Hardware bag can be found under the seat.

Assembly

Step 1

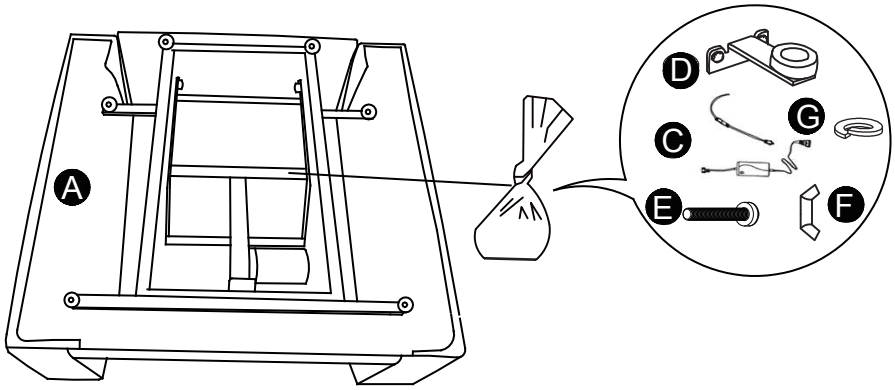

Step 2

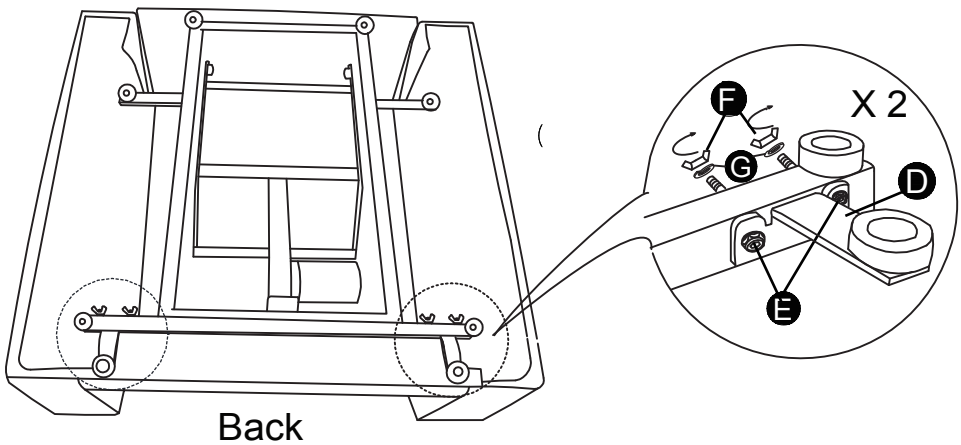

Assembly

Step 3

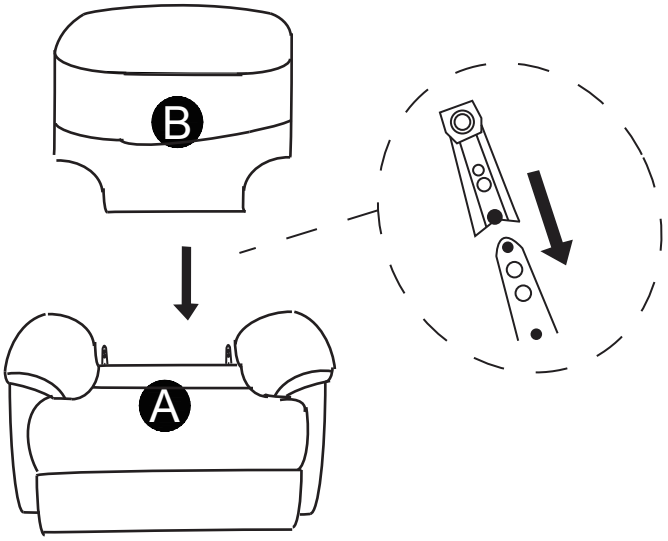

Step 4

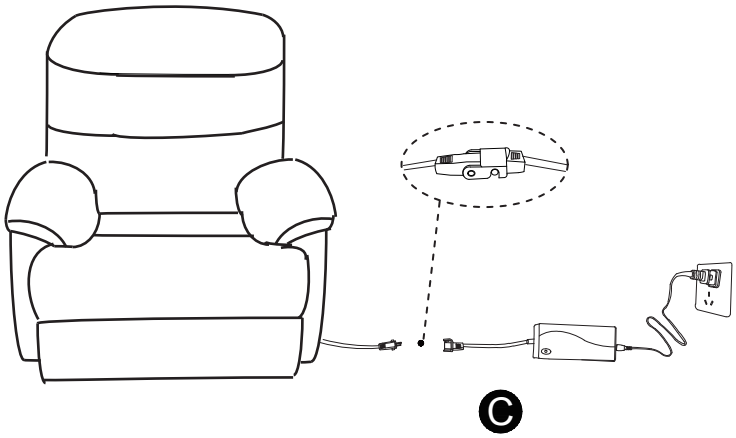

Remote Use

Step 5

Hold the Up button to lift chair / bring the recline position upright

Hold the Down button to recline / bring lift position down

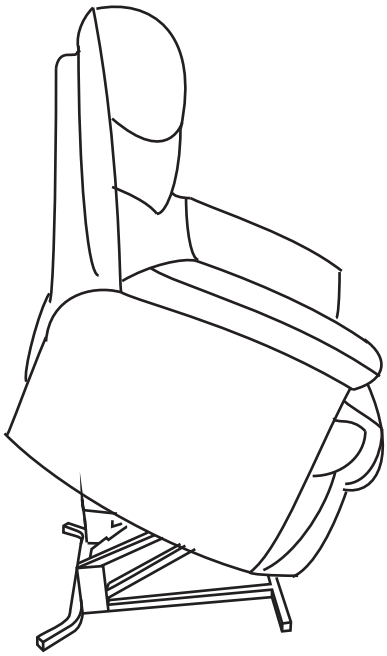

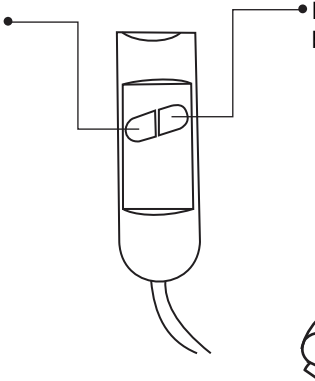

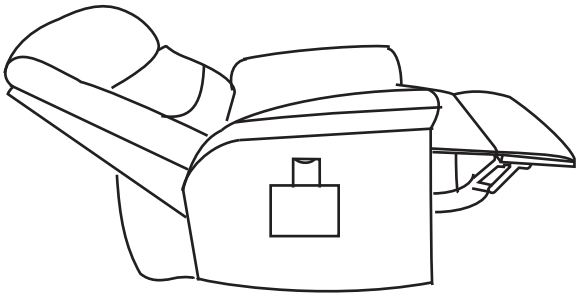

Proper Usage

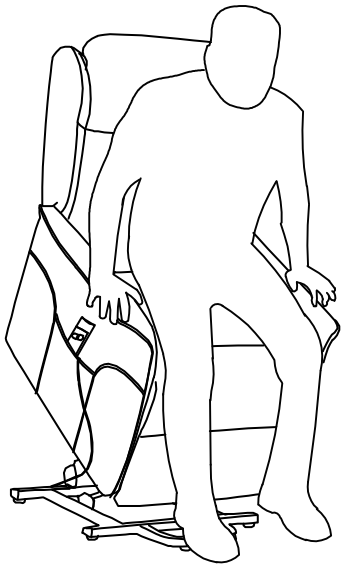

Steps to safely stand up from your Lift Recliner

1. Store remote safely in the recliner's side pocket
2. Plant feet firmly on the ground
3. Evenly distribute weight on both arms of the chair
4. Slowly stand up from lift position

*Remember to store remote safely in the recliner's side pocket when it is not in use

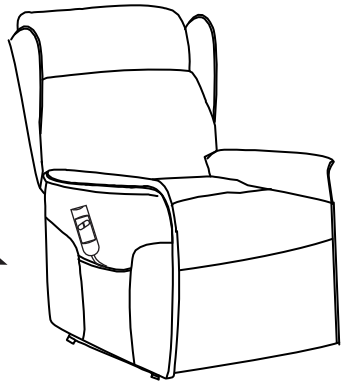

*Fabric will fade or discolor in direct sunlight. Minimize exposure to direct sunlight to extend the life of your furniture.

Improper Usage

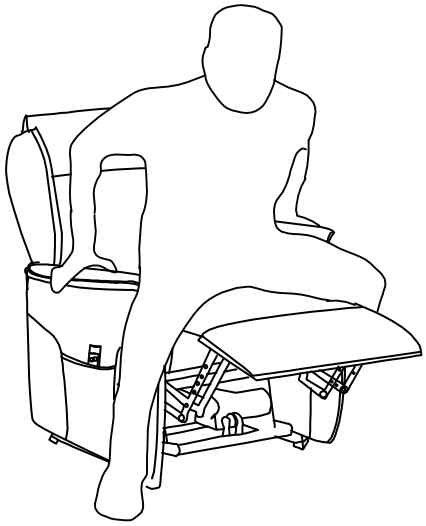

DO NOT stand up when the footrest is in the upright position

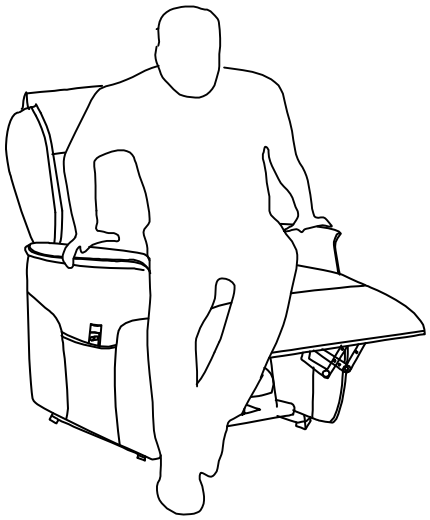

DO NOT stand up from your recliner with uneven weight

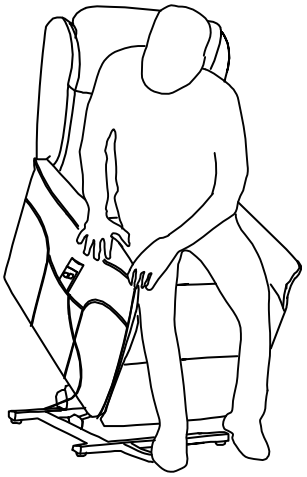

DO NOT stand up from your Lift Recliner with one arm

Your recliner style may differ from images.

CAUTION: Tighten all components securely before use. Failure to do so may result in personal injury.

About your furniture piece:

- Softening of foam is natural and will happen over time with use.
- Fabric will fade or discolor in direct sunlight. Minimize exposure to direct sunlight to extend the life of your furniture.
- Wood grain, knots, streaks, and color variation occur naturally in wood and are not considered defects.