ASSEMBLY INSTRUCTIONS

QUEEN BED (3+3)

No	Part List	Qty.
A	Head Board	1 PC
B	Foot Board	1 PC
C	(L/R) Head Board Leg	2 PCS
D	Side Rail	2 PCS
E	Bed Slat	3 PCS
F	Bed Slat Support	3 PCS

No	Hardware List	Qty
G	CSK SCREW M4 x 32MM	6 PCS
H	JCBC BOLT M6 x 35MM	6 PCS
I	ALLEN WRENCH M4	1 PC
J	FLAT WASHER M6 X 13mm blk	6 PCS
K	1/4 X M6 SPRING WASHER	6 PCS

STEP 1 : Attach Head Board Leg (C) to Head Board (A) as shown using JCBC BOLT(H)with Spring Washer (K), Flat washer (J) and securing with ALLEN WRENCH (I).

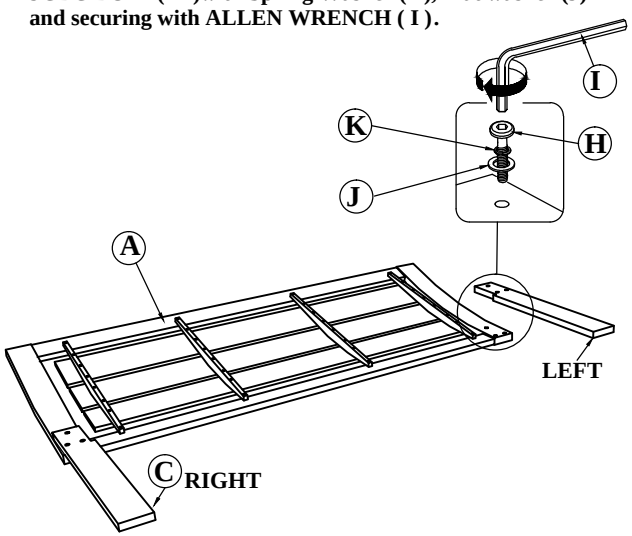

STEP 2 : Hook SIDE RAIL (D) TO HEAD BOARD (A) closely and push down to fit. repeat step 2 with other end of rail to hook onto FOOTBOARD (B).

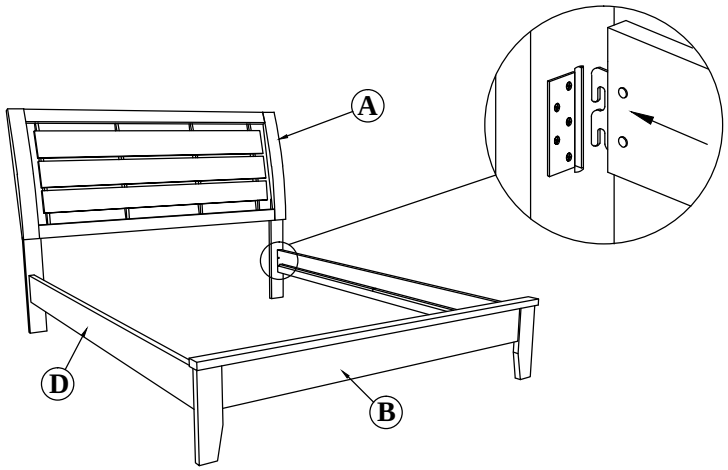

Fix the Bed Slats Support (F) to Bed Slats (E) as Shown and fix the Bed Slats to Side Rail (D) by using CSK Screw (G). Loosen or Tighten the Adjuster as necessary to level the bed. Bed assembly should be done in final location to ensure stability.

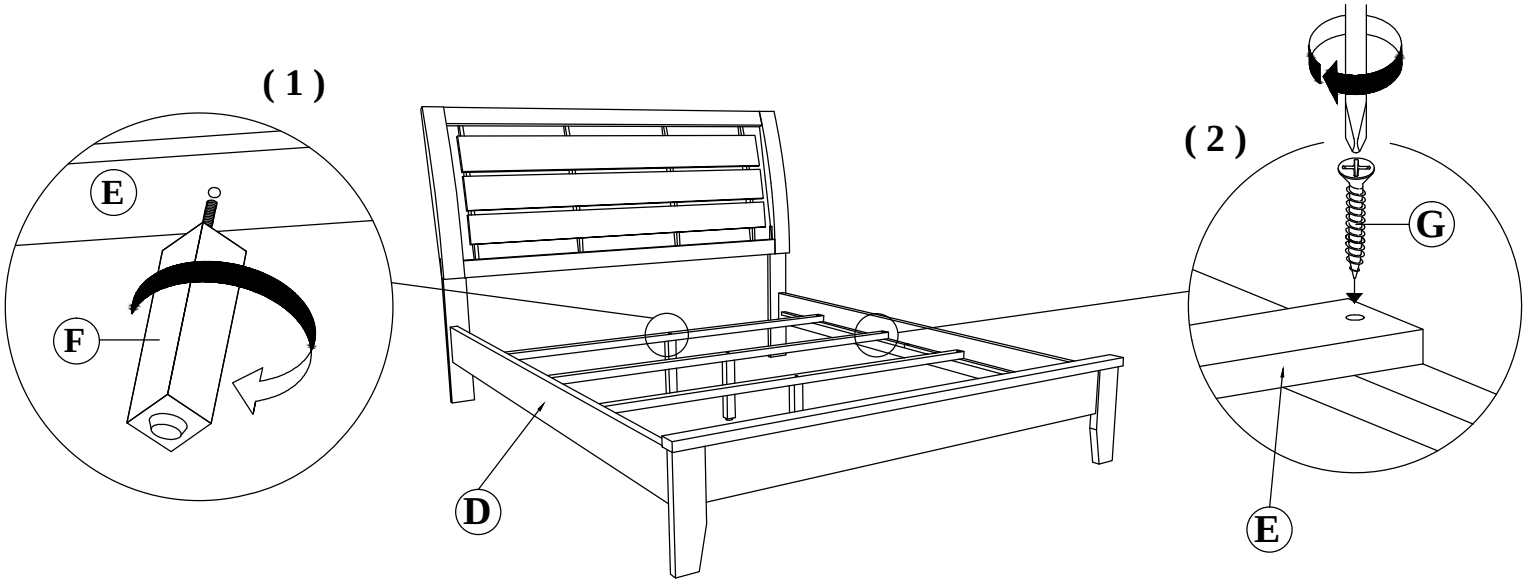

NOTE : MUST TIGHTEN SCREWS PERIODCALLY WITH USE SCREW WILL BECOME LOOSE CHECK TIGHTNESS OF ALL SCREW EVERY 6-8 WEEKS.