Note :

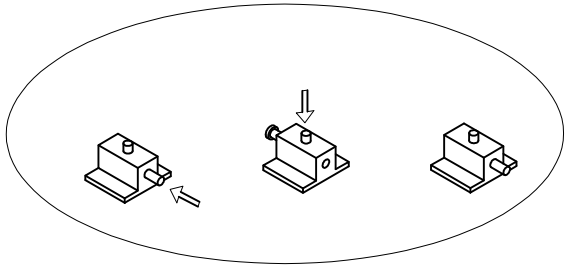
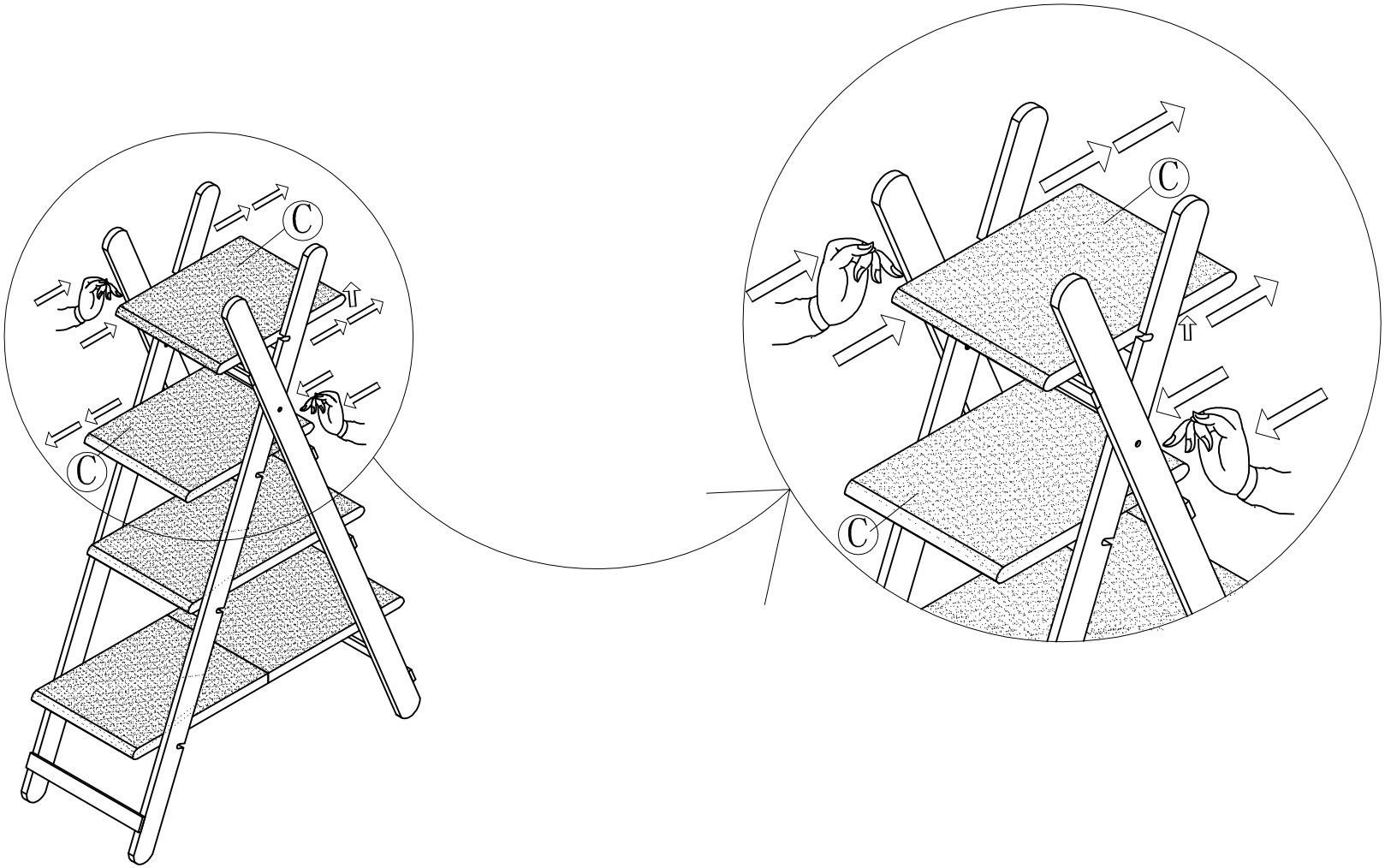
when assembly small panel(C parts), if the spring bolt is too tight;
Please tap inward the small panel(C parts) by hand ,
and the spring bolt can be easily assembled.