NATIVE TRAILS

SPECIFICATIONS

CARRARA MARBLE VANITY TOP

ALL SIZES - CLASSIC WITH 8" WIDESPREAD CUTOUT

TOP VIEW

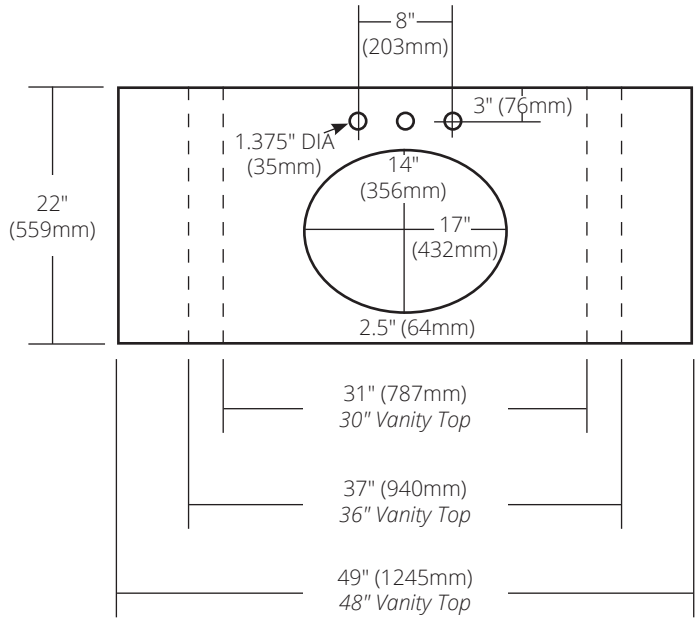

30" Vanity Top
31"w x 22"d x .75"h (787mm x 559mm x 19mm)
VNT30-CO

36" Vanity Top
36"w x 22"d x .75"h (940mm x 559mm x 19mm)
VNT36-CO

48" Vanity Top
49"w x 22"d x .75"h (1245mm x 559mm x 19mm)
VNT48-CO

PRODUCT DETAILS

- Lightly polished Italian marble
- Pre-drilled 8" for widespread faucet

COORDINATING PRODUCTS

- Classic, Rolled Classic, Cuyama, Hibiscus, Tolosa, or Maestro Lotus sinks
- Drains: DR120, DR130 or DR150

IMPORTANT

Due to the handcrafted nature of this product, it will vary in finish, texture, and other details. Dimensions may vary up to ¼" (6mm).