ASSEMBLY INSTRUCTIONS

ITEM NO: 45841

Parts required

1		Bolt	Φ6*16MML	6pcs
2		Lock washer	Φ6MM	6pcs
3		Allen wrench		1pc

A	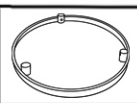	metal table top w/ mirror	1pc
B		acryl leg	3pcs
C	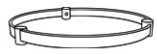	metal base	1pc

1.

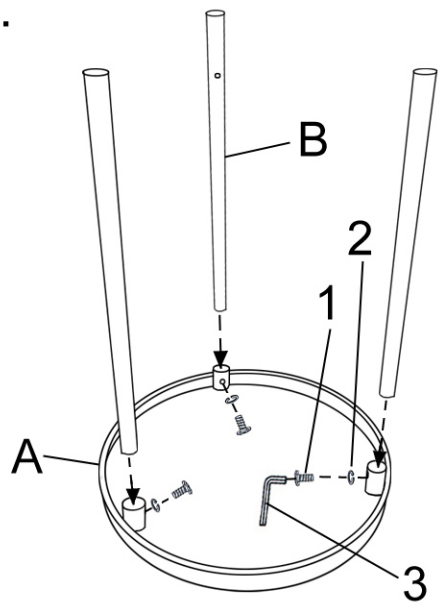

2.

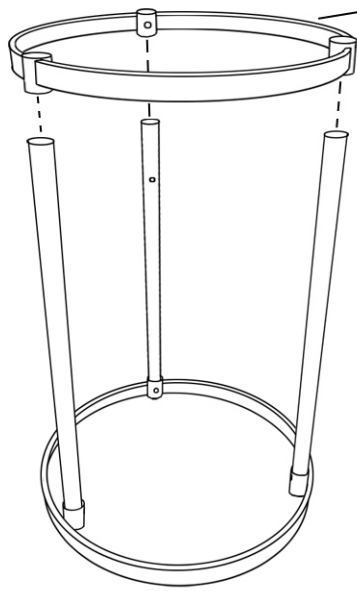

3.

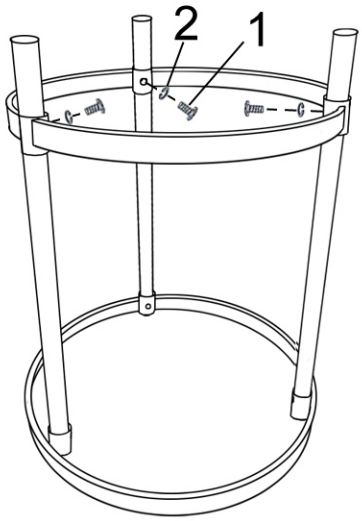

4.

