Installation Manual

Any question please contact us

yoursupport@163.com

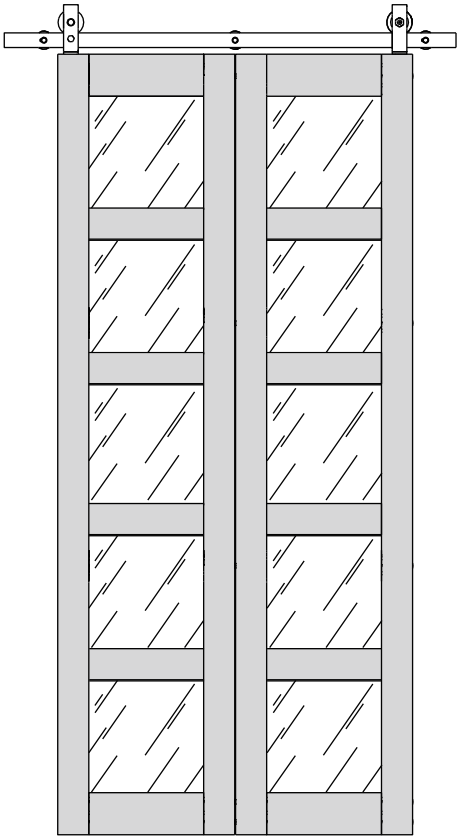

NOTICE Please retain these instructions for future reference

•Do not stand on or use any part of this item as a step ladder.
•Firmly secure all bolts, screws and knobs before use.
•Reconfirm that all bolts, screws and knobs are secure every 90days.
•Fasten screws loosely during initial assembly. Do not firmly tighten the screws until the item is completely assembled.
•Do not use or store this item in the proximity of open flame or combustible chemicals.
•Be aware that some parts are heavy and have sharp edges.
•If any parts are missing, broken, damaged, or worn, please contact us for assistance.

Product Content

A.1, Track

A.2, Wall spacer

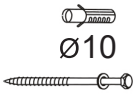

B. Movable pulley and bolts

X1

C. Fixed pulley and bolts

X1

D. Fixator

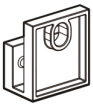

E. Pulley base

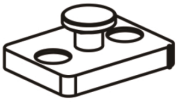

ST4.8X50

F. Track connector

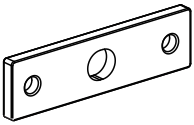

M6x5

G. Hinges

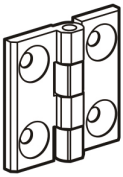

ST6X25

H. Floor guide

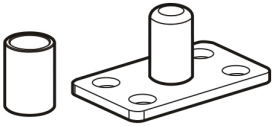

ø8

ST4.2X32

I. Seal

J. Handle

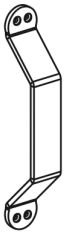

X1

ST4.2X25

K.

φ 5⁄32”(4mm)

φ 3⁄32”(2.5mm)

φ 5⁄64”(2mm)

Tools Needed

1.Pencil

2.Wrench

3.Phillips Screwdriver

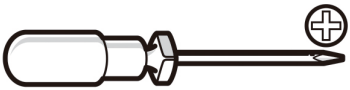

4.Plumb Bob

5.Drill

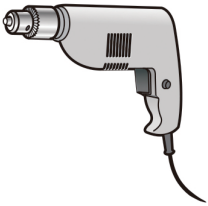

6.Level

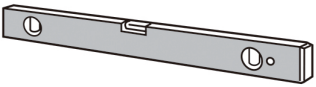

7.Drill Bit

φ 3/16”

φ 5/16”

φ 3/8”

8.Tape

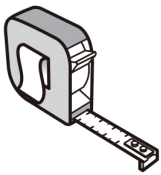

PARTS LIST

Door size	2x12"	2x14"	2x15"	2x16"	2x18"	2x21"	2x24"	4x12"	4x14"	4x15"	4x18"
1.Track Size	28"	32"	34"	36"	40"	46"	52"	28" x2	32" x2	34" x2	40" x2
2.Spacer	3	3	3	3	3	3	4	6	6	6	6
3.Movable Pulley and bolts	1	1	1	1	1	1	1	2	2	2	2
4.Fixed Pulley and bolts	1	1	1	1	1	1	1	2	2	2	2
5.Fixator	1	1	1	1	1	1	1	2	2	2	2
6.Pulley base	2	2	2	2	2	2	2	4	4	4	4
7.Hinges	3	3	3	3	3	3	3	6	6	6	6
8.Floor guide	1	1	1	1	1	1	1	2	2	2	2
9.Track connector	1	1	1	1	1	1	1	2	2	2	2
10.Handle	1	1	1	1	1	1	1	2	2	2	2
11.Seal	1	1	1	1	1	1	1	2	2	2	2

PARTS		QTY	PARTS		QTY
A1	Left Side Stile	2	C	Glass Panel	6
A2	Right Side Stile	2	D	Corks	**44**
B1	Top Rail	2	E	Screws	20
B2	Bottom Rail	2	F	Plastic Plugs	20
B3	Middle Rail	4	G	Door Bumpers	**2**

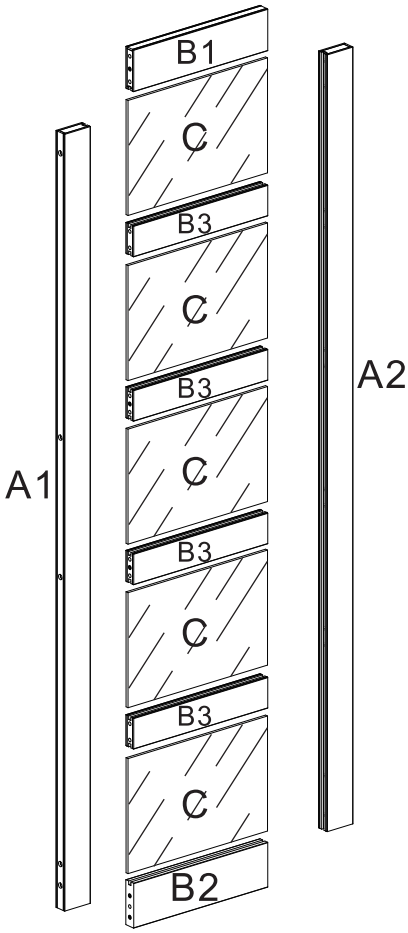

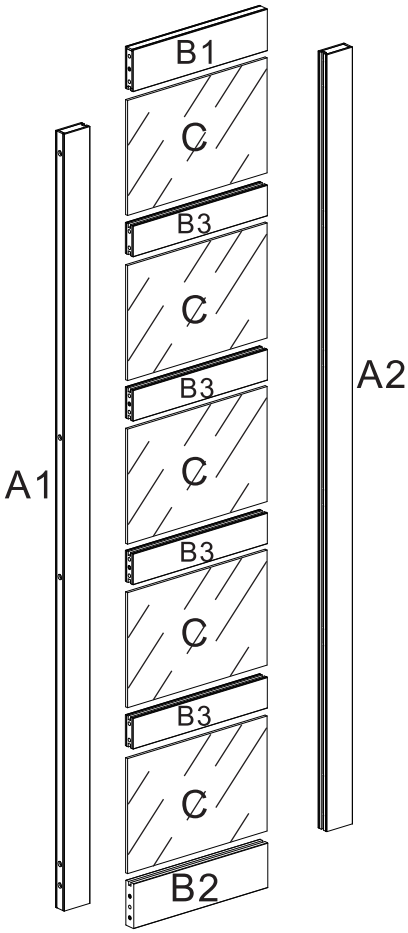

D

Ø 8x40
(x44)

E

ST5x120
(x20)

F

Ø 12
(x20)

G

(x2)

Measurements

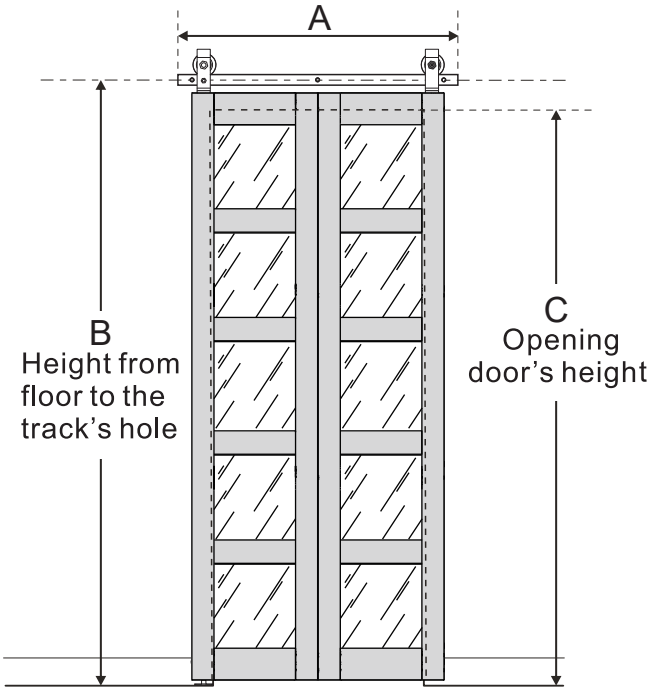

Door Options	Door Size	Opening Door Width	A Track Size	B Track Installation Height	C Door Opening Height
2 Doors	(12" * 84") * 2	≤22 "	28"	86"(2184mm)	≤84 "
	(14" * 84") * 2	≤26 "	32"	86"(2184mm)	≤84 "
	(15" * 84") * 2	≤28 "	34"	86"(2184mm)	≤84 "
	(16" * 84") * 2	≤30 "	36"	86"(2184mm)	≤84 "
	(18" * 84") * 2	≤34 "	40"	86"(2184mm)	≤84 "
	(21" * 84") * 2	≤40 "	46"	86"(2184mm)	≤84 "
	(24" * 84") * 2	≤46 "	52"	86"(2184mm)	≤84 "
	(12" * 96") * 2	≤22 "	28"	98"(2487mm)	≤96 "
	(15" * 96") * 2	≤28 "	34"	98"(2487mm)	≤96 "
	(18" * 96") * 2	≤34 "	40"	98"(2487mm)	≤96 "
	(24" * 96") * 2	≤46 "	52"	98"(2487mm)	≤96 "
4 Doors	(12" * 84") * 4	≤46 "	28" x2	86"(2184mm)	≤84 "
	(14" * 84") * 4	≤54 "	32" x2	86"(2184mm)	≤84 "
	(15" * 84") * 4	≤58 "	34" x2	86"(2184mm)	≤84 "
	(18" * 84") * 4	≤70 "	40" x2	86"(2184mm)	≤84 "

Installation suggestions

Sometimes there will be some issues when install the track such as a mismatch between studs and pre-drilled holes on the track.
To avoid that we recommend using a head board on all installation scenario.
The size of the head board should better be 1''x4'' or 1''x6'' and a bit longer than the track.

***Please note that the head board and matched screws are not included.**

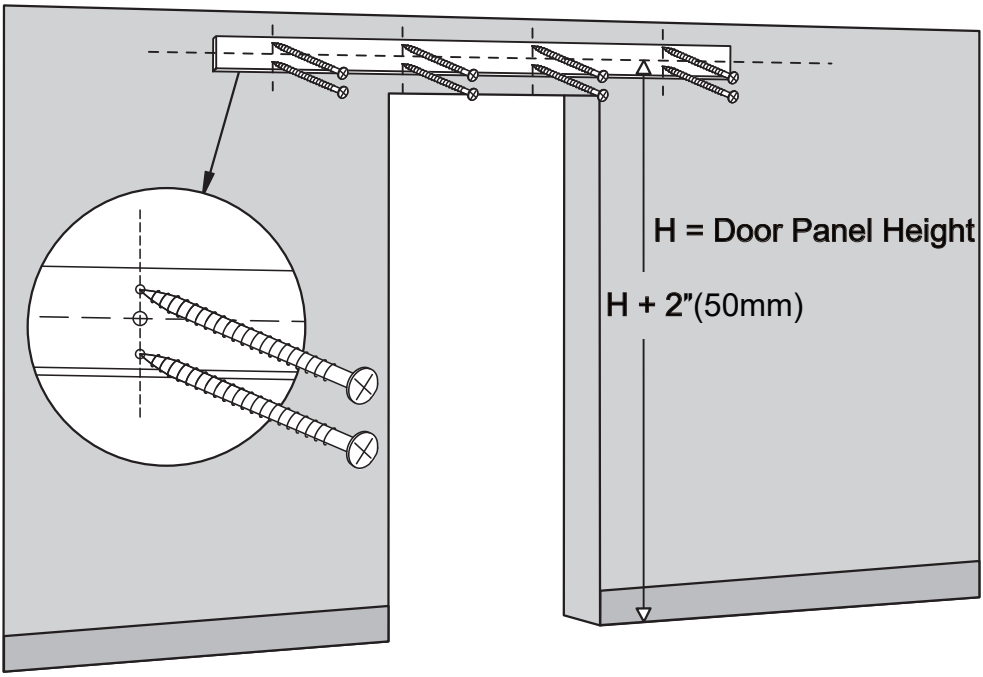

Step1

Position the track at the required height and pencil-mark the mounting holes to verify the installation location.

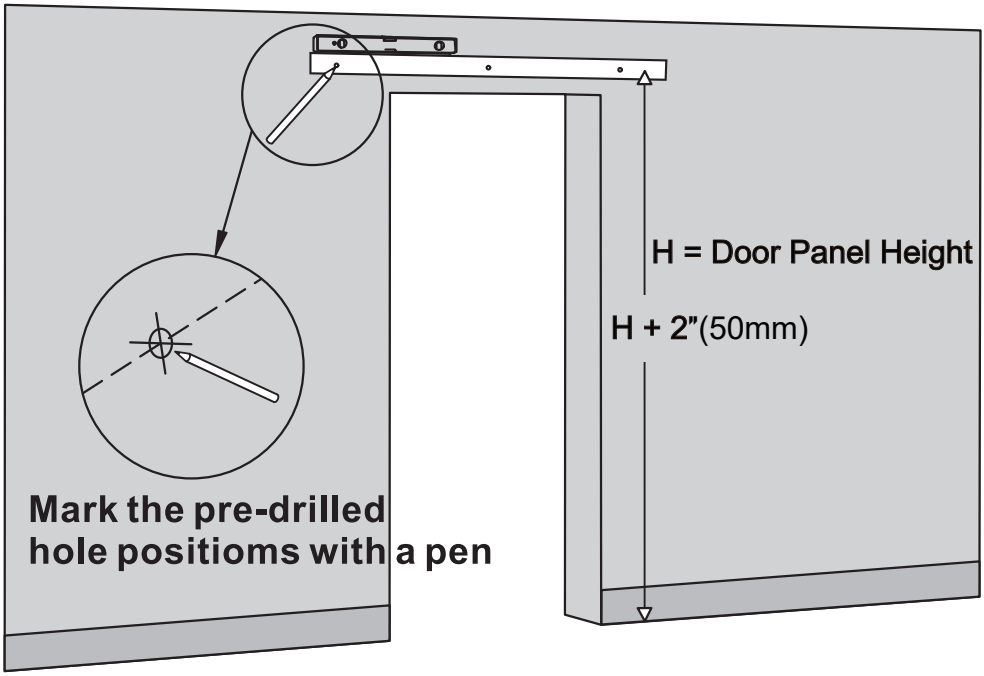

Track installation

If the rail is too long or have multipe doors, Please remove the plastic cover at the end of the track. Then connect the rails with connectors, Pay attention to the screw hole facing the wall.

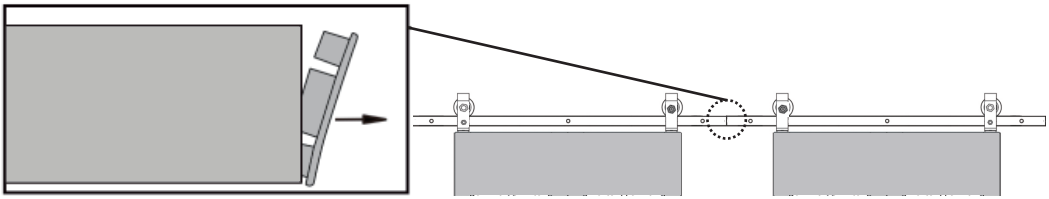

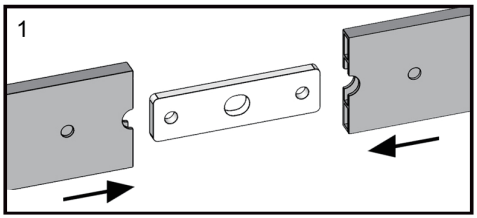

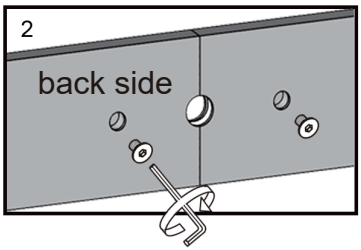

Step2

Install rail

① Drywall Installation

Install the lag bolt to wood stud or head board directly.

Bore hole depth: 2 3/16 " (55mm)
Bit diameter: 3/16" (4.8mm)

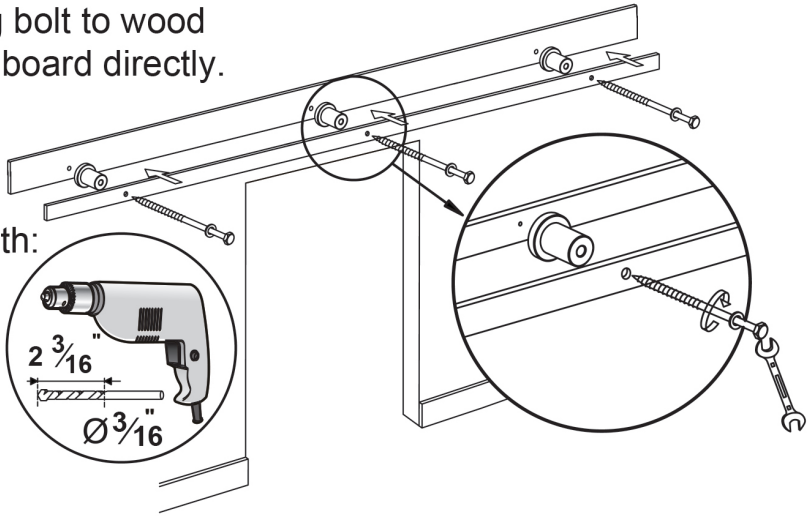

② Concrete wall Installation

Install the white plastic anchor to holes on the wall first, then install lag bolt to anchor.

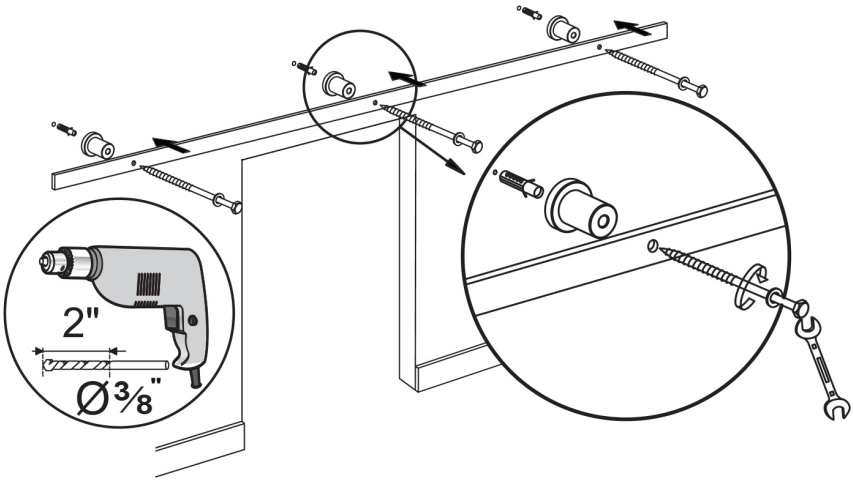

Bore hole depth: 2" (50mm)
Bit diameter: 3/8" (10mm)

Step-3

On the flat, lay out one side stile (A1) with the groove facing to the right. Assemble top rail (B1), middle rail(B3) and bottom rail (B2) to A1 with corks (D).

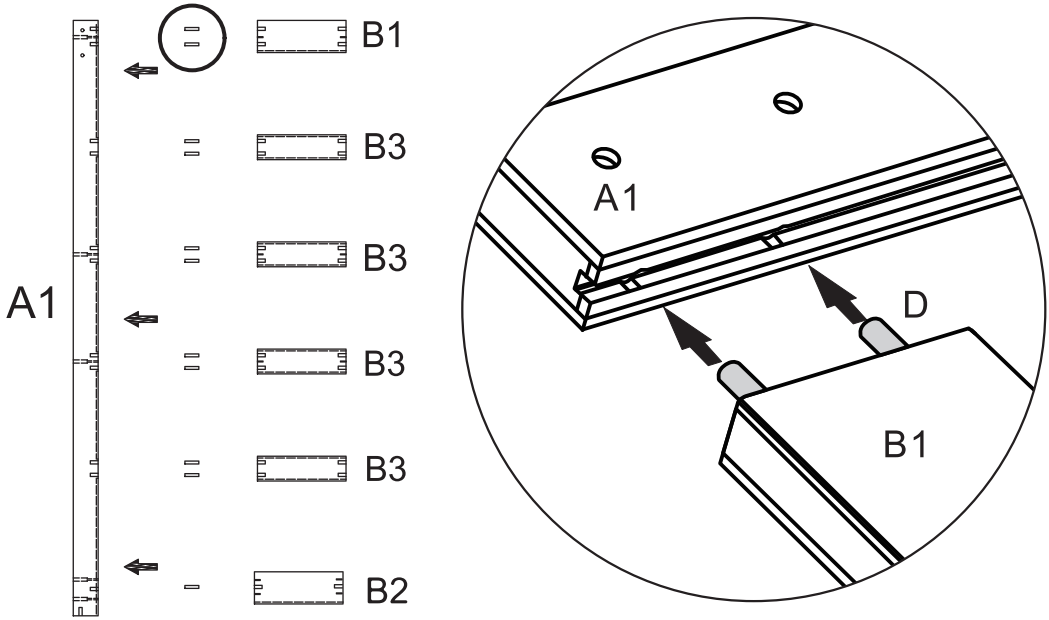

Step-4

Assemble the Glass Panel (C).

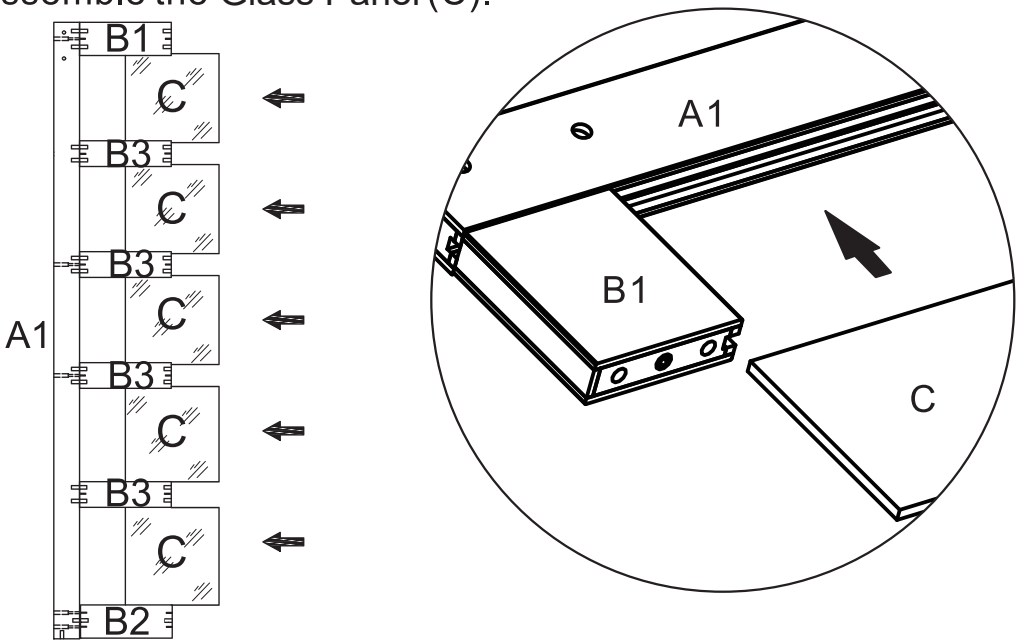

Step-5

Assemble the right side stile (A2) with corks (D) to cover the top and bottom rail and the edge of the slats assembled.

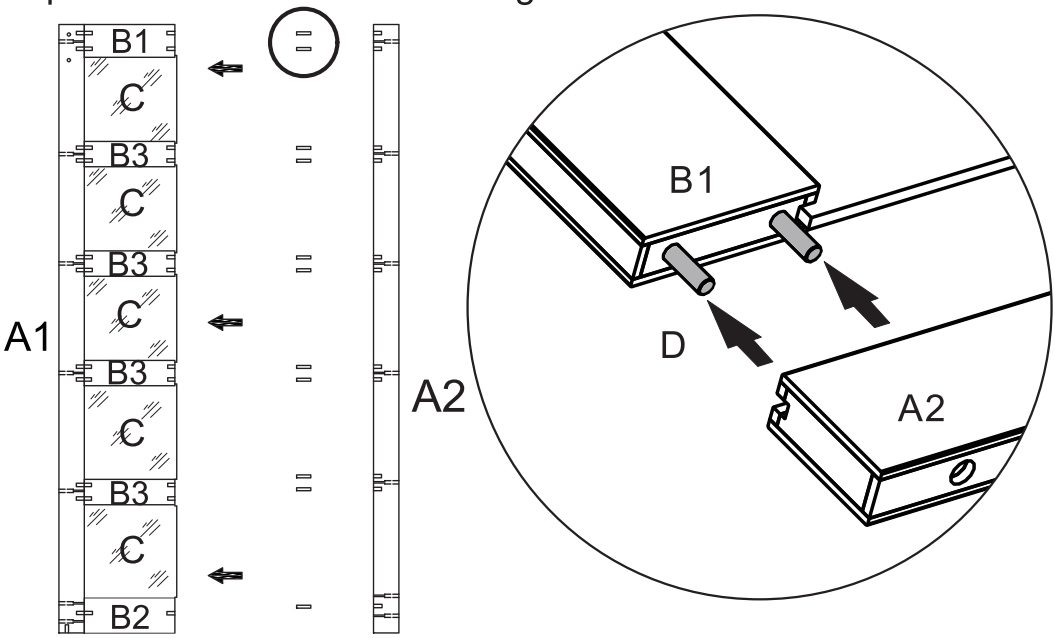

Step-6

Lock screws (E) to side stile (A1 and A2).

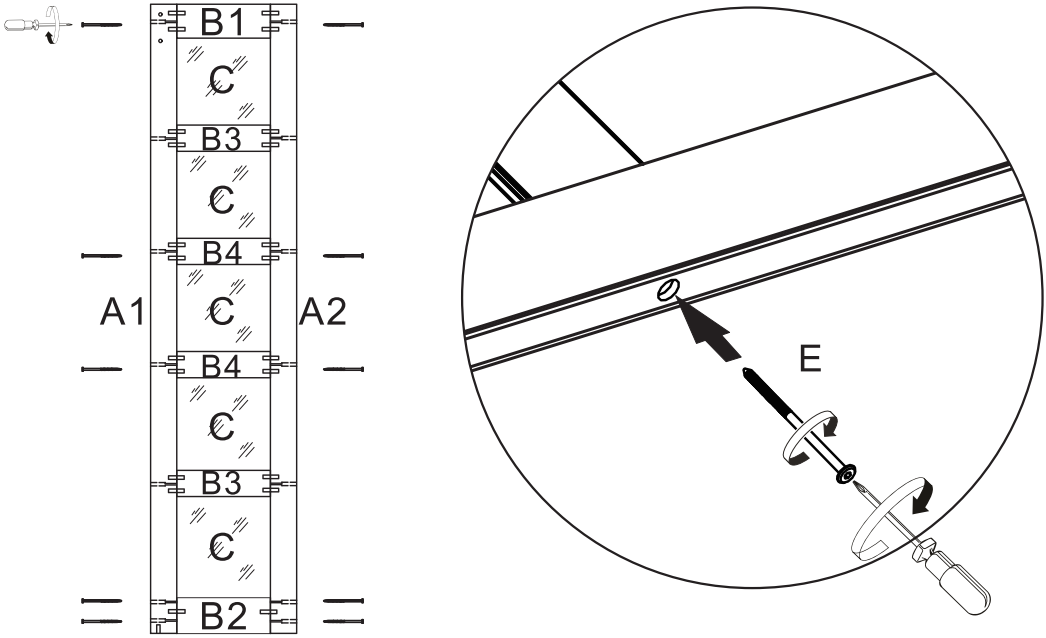

Step-7

Cover the plastic plugs (F).

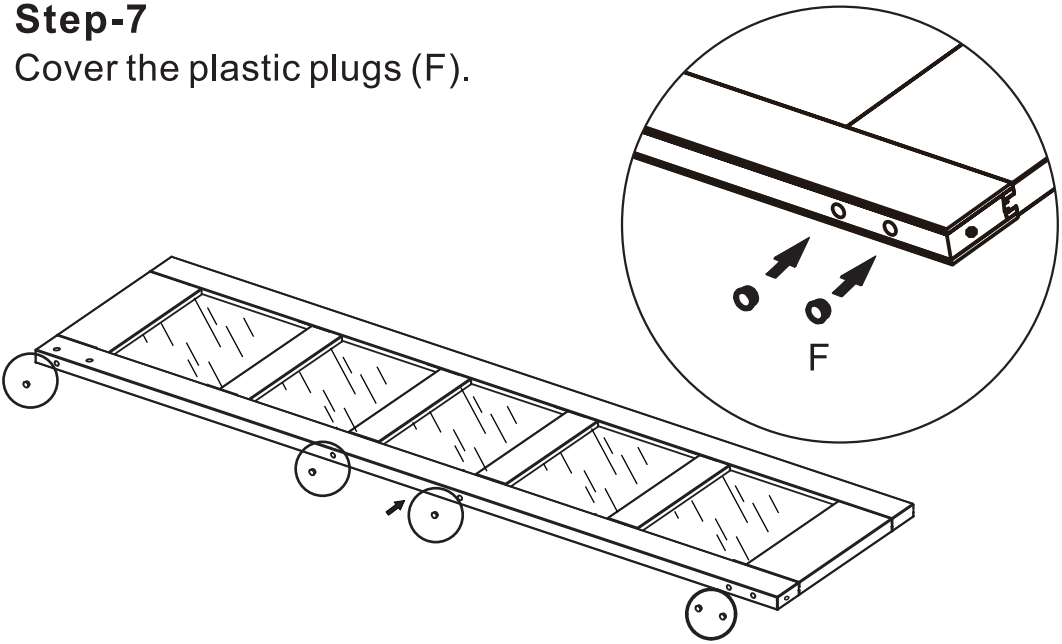

Step-8

Stick the door bumpers (option),which can prevent two doors from colliding.

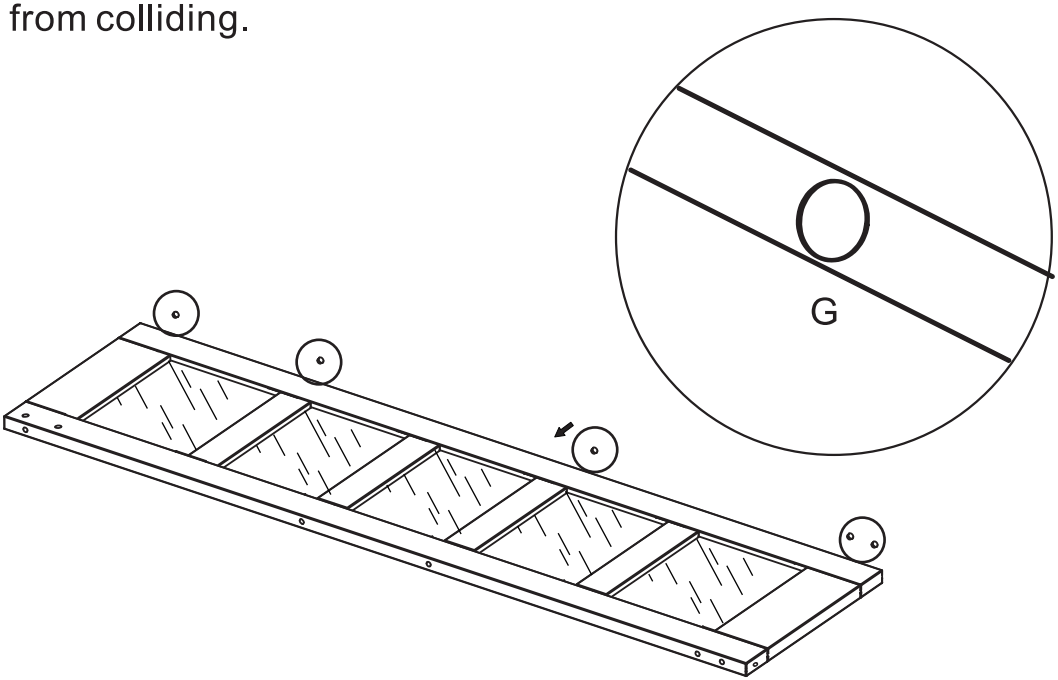

Step9

Install hinges

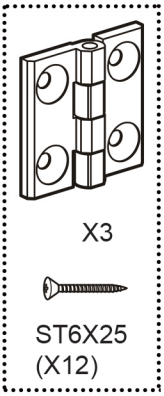

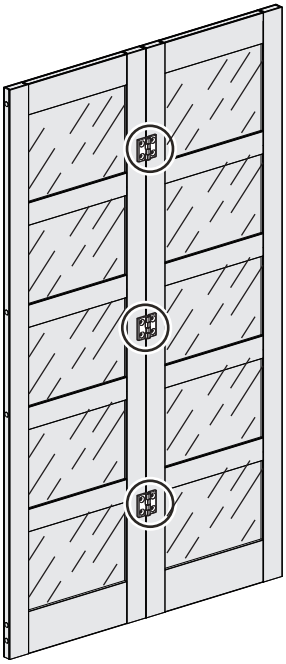

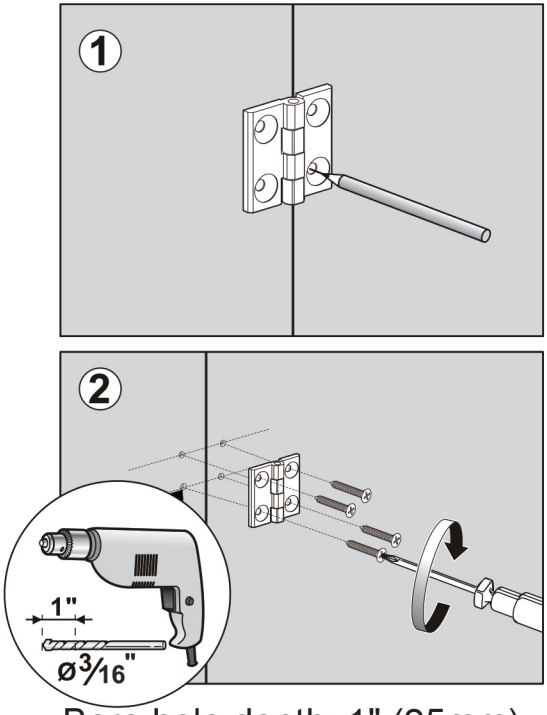

Bore hole depth: 1" (25mm)
Bit diameter: 3/16" (4.8mm)

Step10

Install pulley base

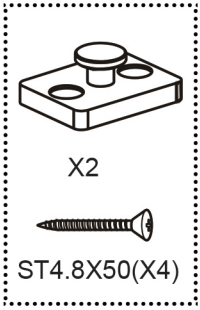

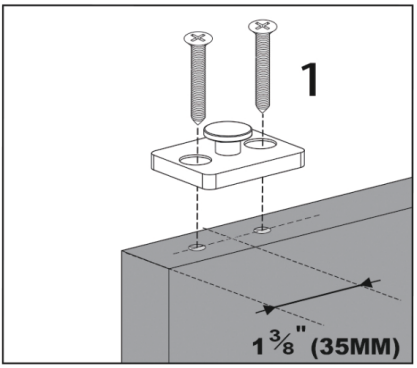

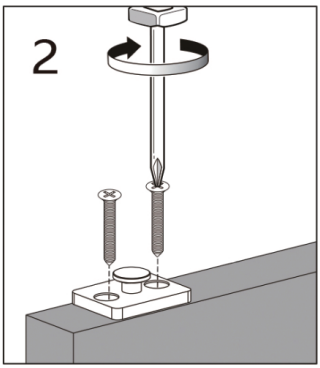

Distance of basse center from edge of door is 1⅜"(35mm)

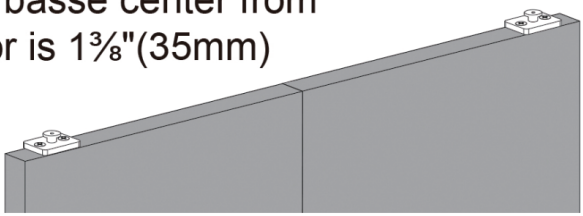

Step11

Hang up pulley

For 2 doors

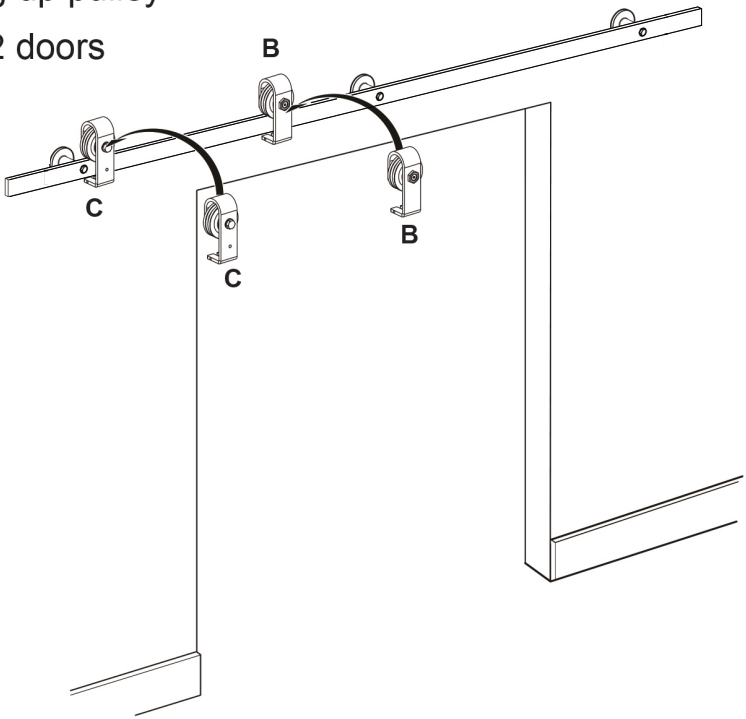

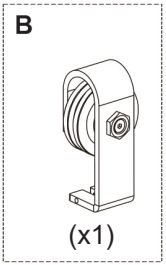

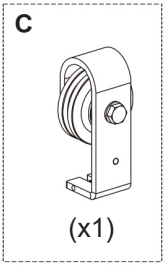

For 4 doors

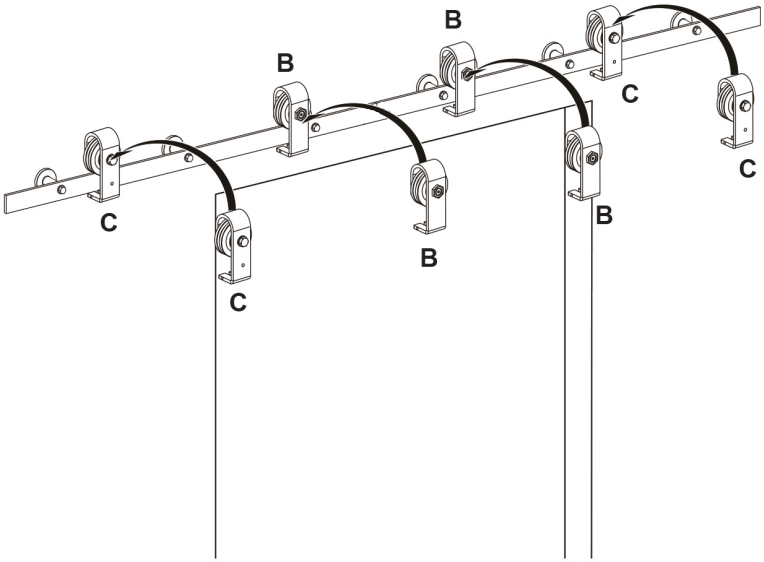

Step12

Install foolr guide

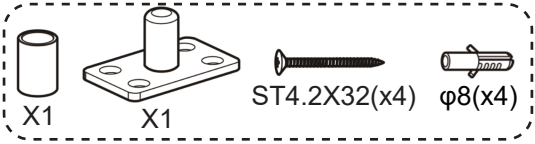

For 2 doors

Bore hole depth:
1⅜ " (35mm)
Bit diameter:
5⁄16" (8mm)

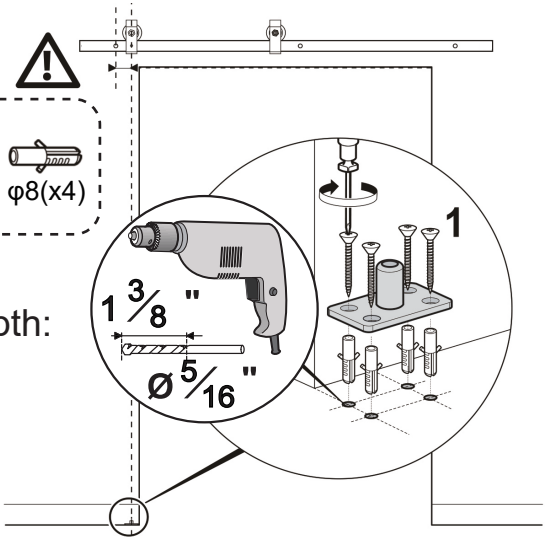

For 4 doors

Bore hole depth:
1⅜ " (35mm)
Bit diameter:
5⁄16" (8mm)

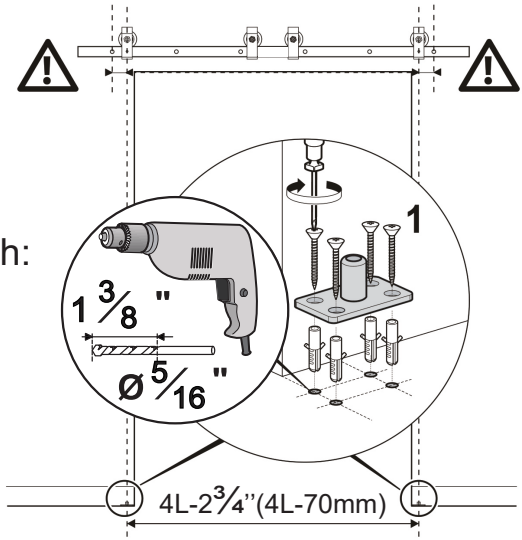

Assuming that the width of the door panel is L.the distance between the floor guides is 4L-2¾''(4L-70mm)

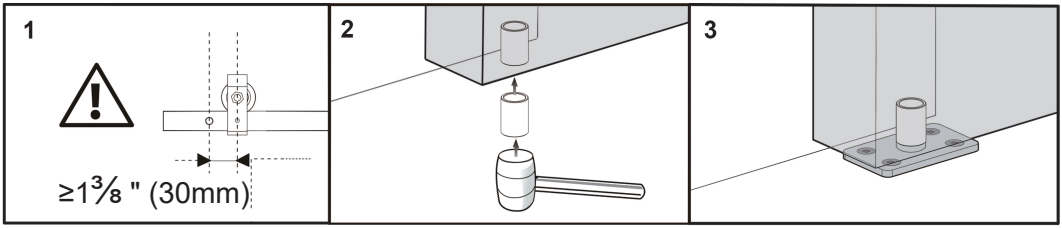

TIP: The min spaceing from central position of fixed pulley C to spacer is ≥1³⁄₁₆ " (30mm) .

Insert the metallic sheath of floor guide to bottom of door panel.

completed

Step13

Install fixed pulley

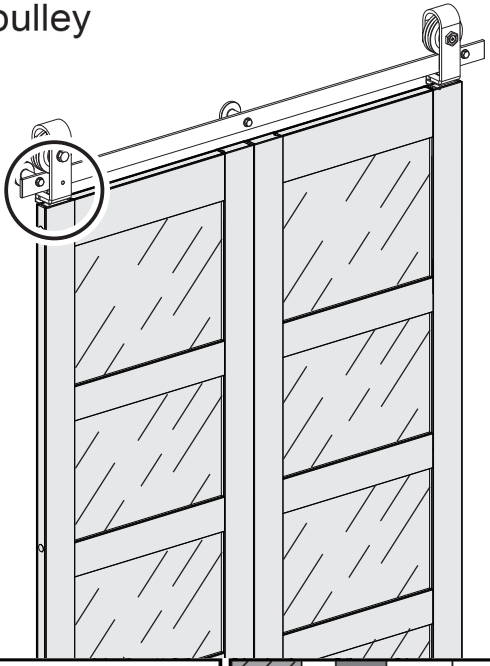

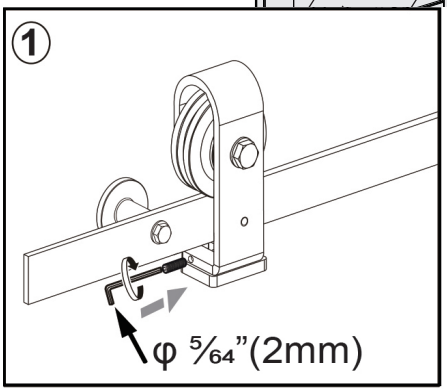

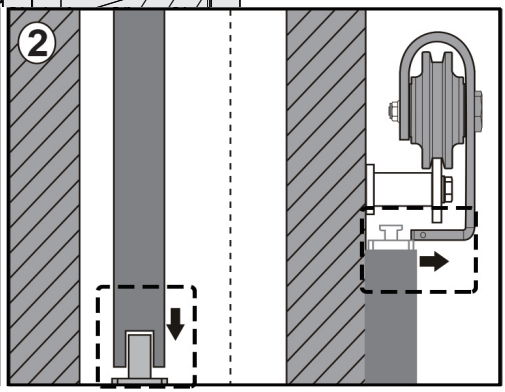

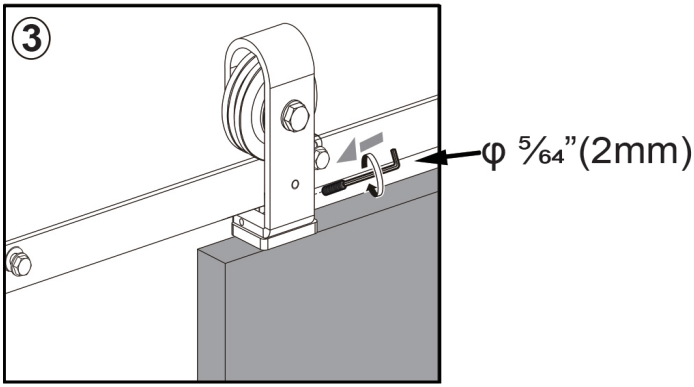

Step14

Install movable pulley.

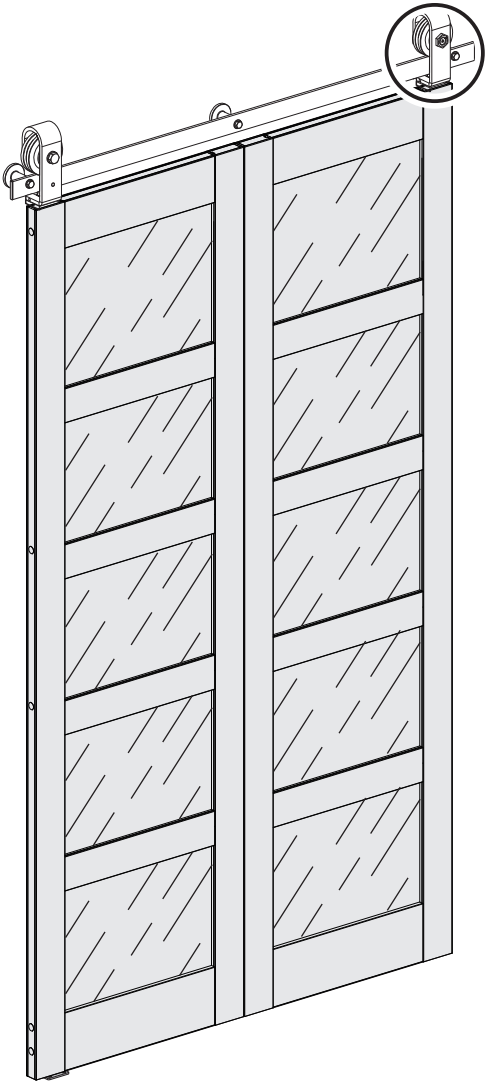

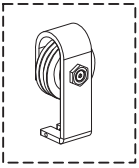

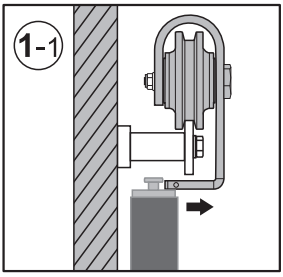

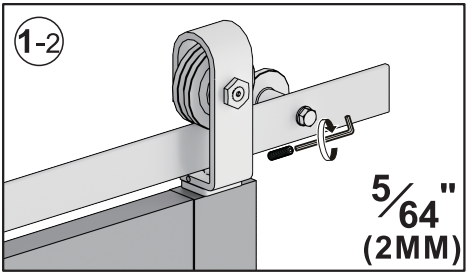

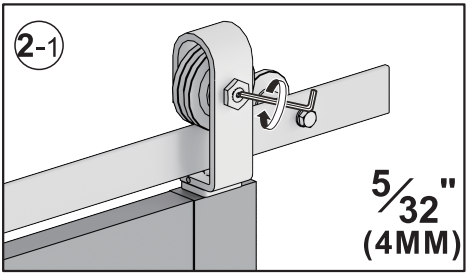

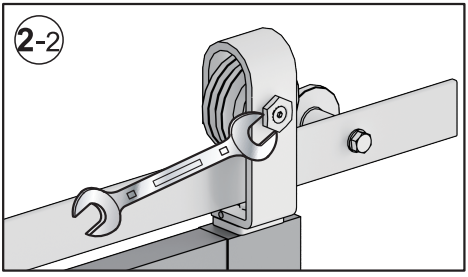

If the height of two doors are uneven, align them by adjusting the height of movable **pulley 3** by hexagon wrench and wrench. adjustment range:**3/32"(2.5MM)**

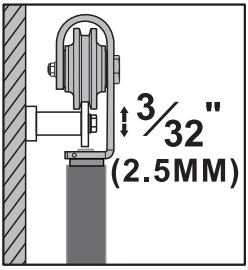

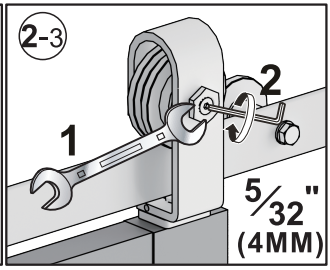

Step15

Install the fixator of hanging pulley.

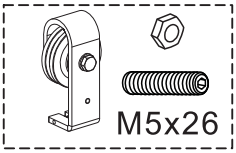

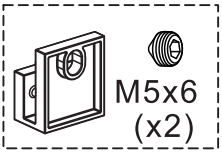

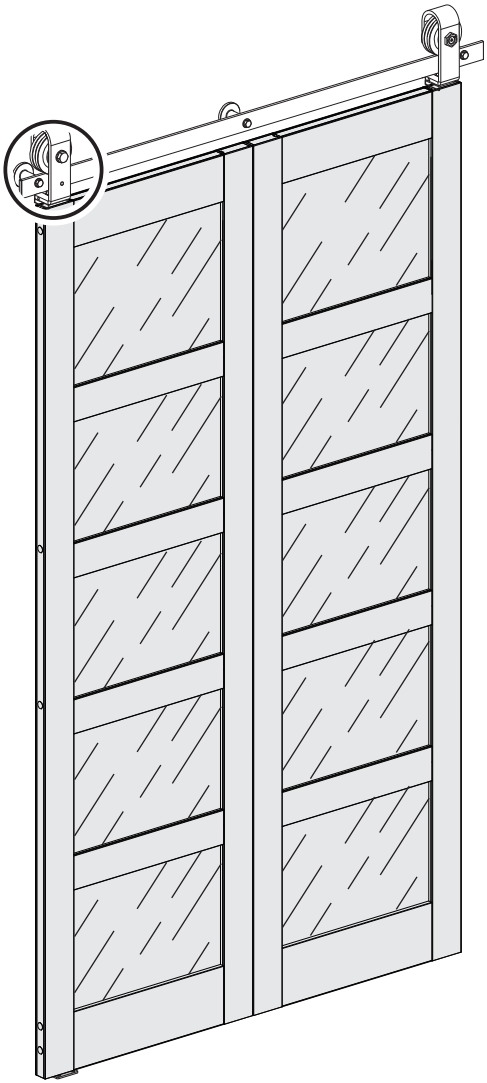

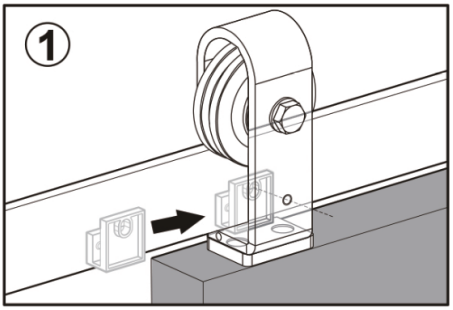

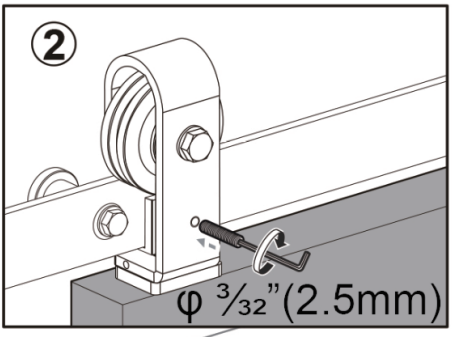

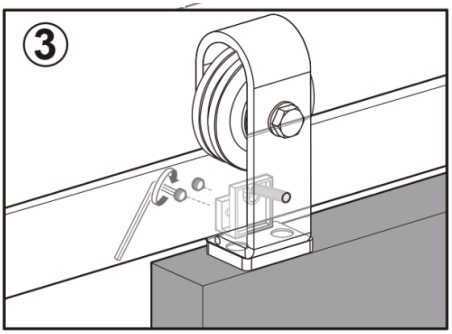

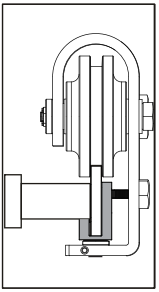

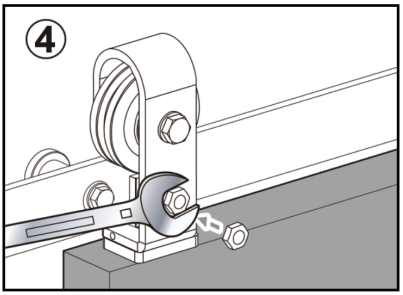

Step16

Install the handle

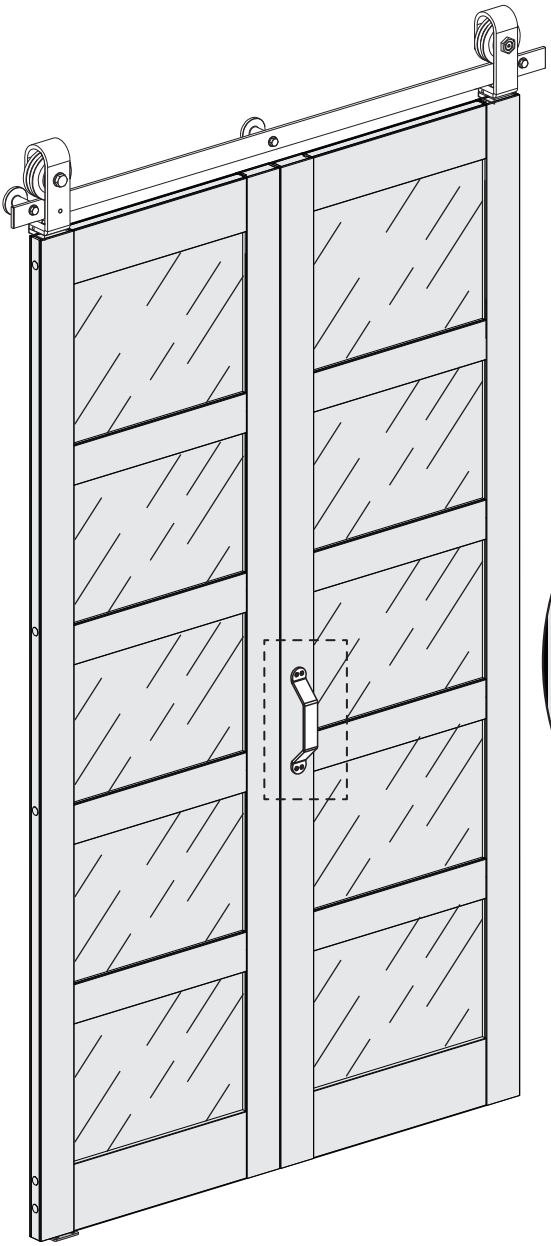

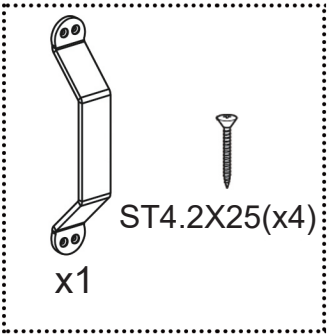

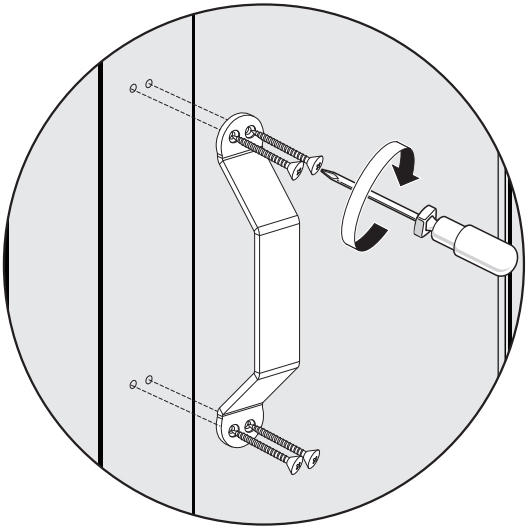

Step17

Stick a seal
If there are 4 doors

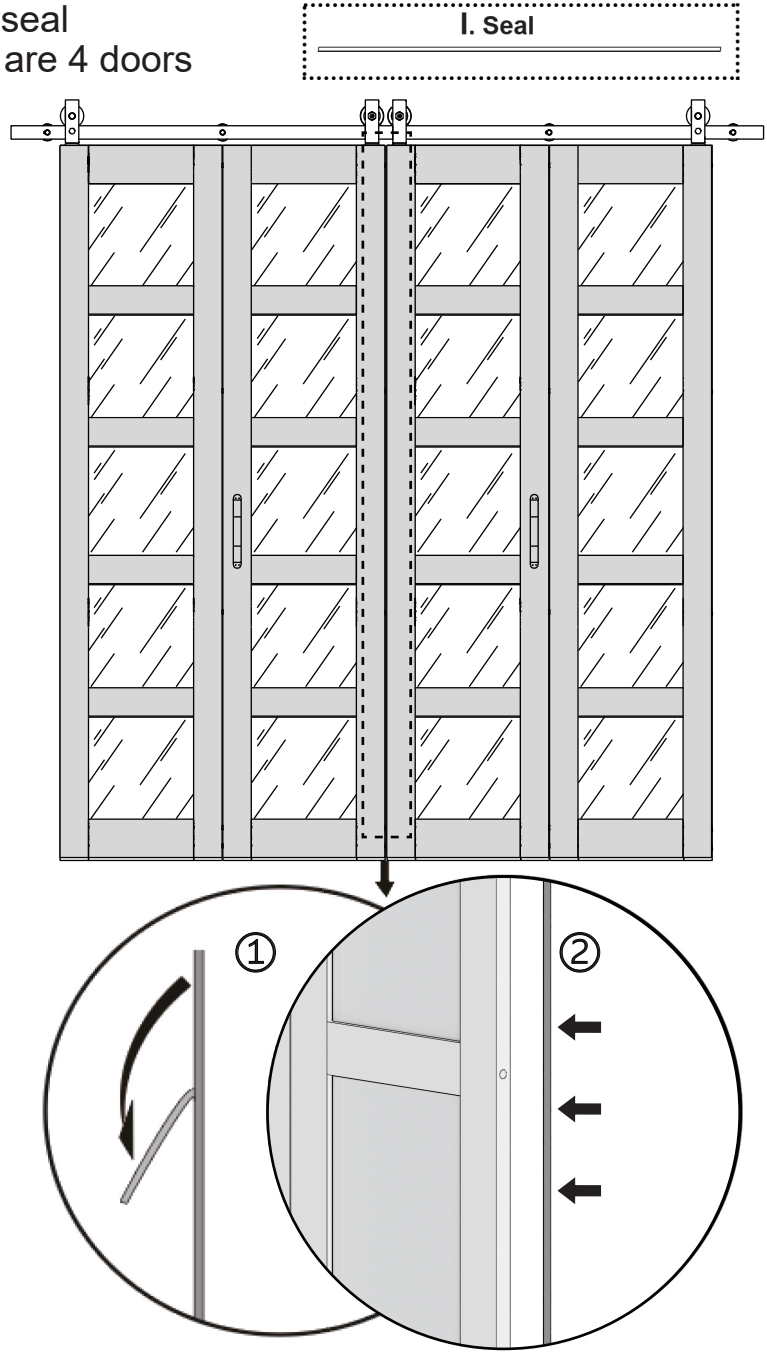

Tear double-sided adhesive tape apart, then stick the seal