ASSEMBLY INSTRUCTION

CHAIR

WRT00031DC

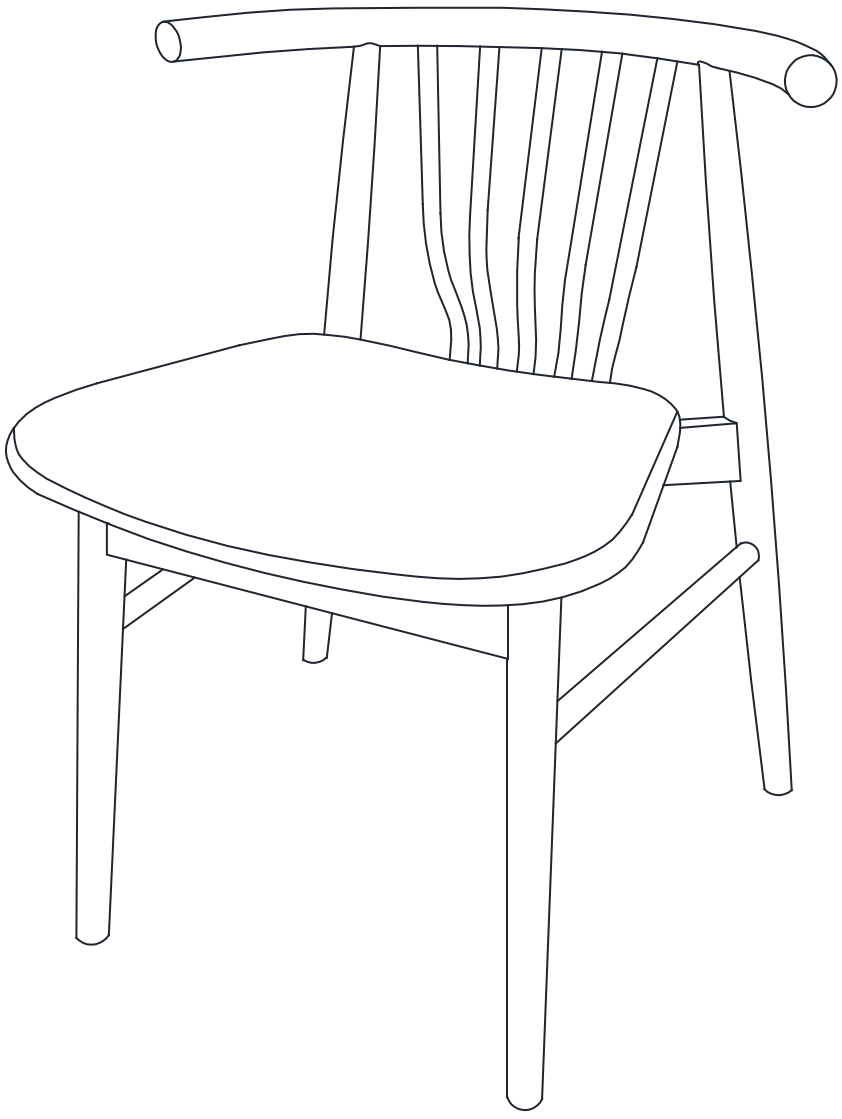

Componet List

LABEL		DESCRIPTION	QTY
A	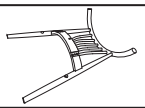	Back stand	1
B	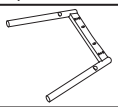	Front leg	1
C		Seat	1
D	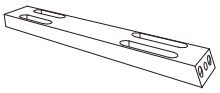	Side rail (R)	1
E	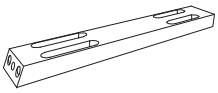	Side rail (L)	1
F	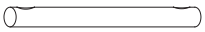	Strechter	2

Hardware List

LABEL		DESCRIPTION	QTY
H1		Allen Key M4 with ball	1
H2		Jcbc screw M6 x 50mm	8
H3		Spring washer M6 x 13mm	8
H4		Flat washer M6 x 13mm	8
H5	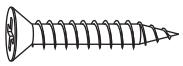	Csk screw M4 x 30mm	8
H6		Wood dowel M8 x 30mm	4
H7	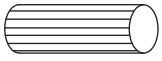	Wood dowel M8 x 25mm	1

"FOR CSK SCREW, YOU CAN USE A SCREWDRIVER  OR AN ELECTRIC DRILL  TO SCREW THEM IN-
PLEASE PREPARE THIS YOUSELF."

1

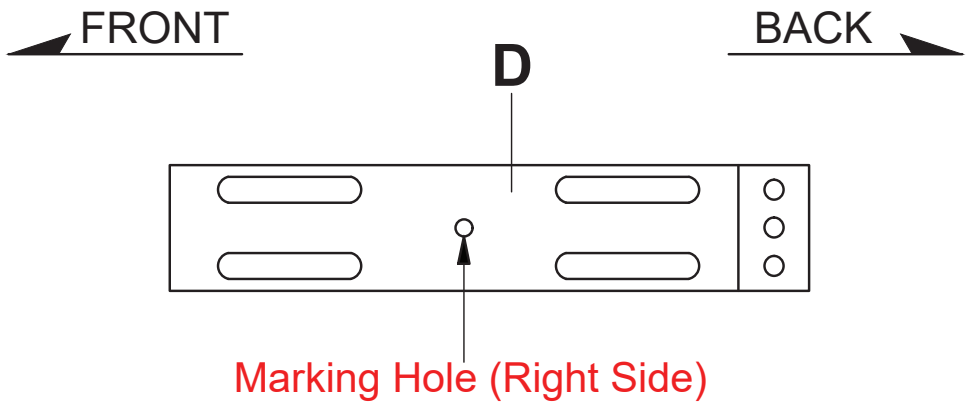
FRONT
BACK
D
Marking Hole (Right Side)

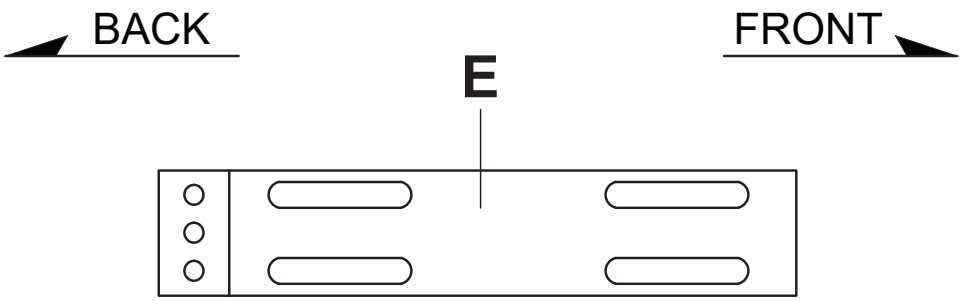
BACK
FRONT
E

2

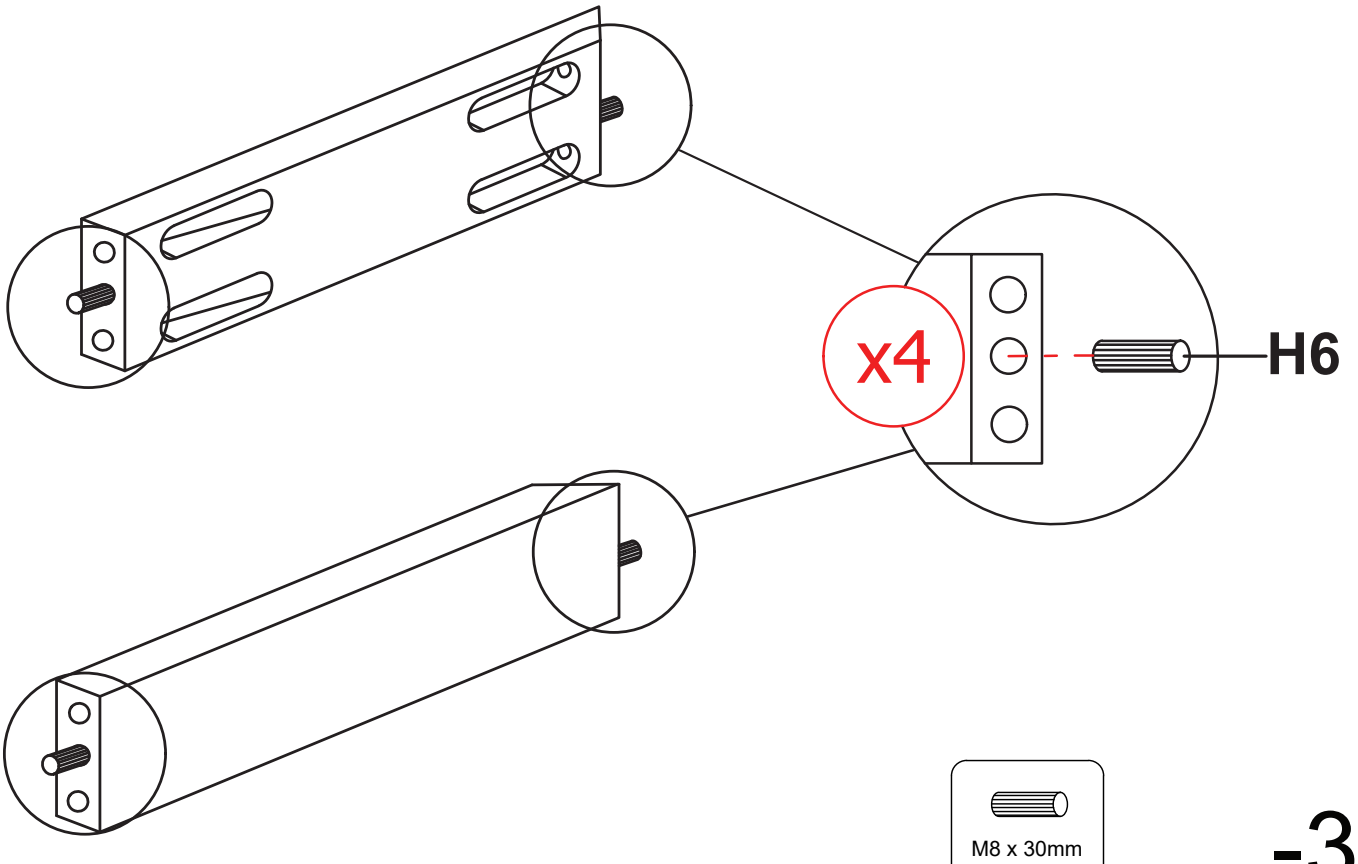
x4
H6
M8 x 30mm
H6 x 4

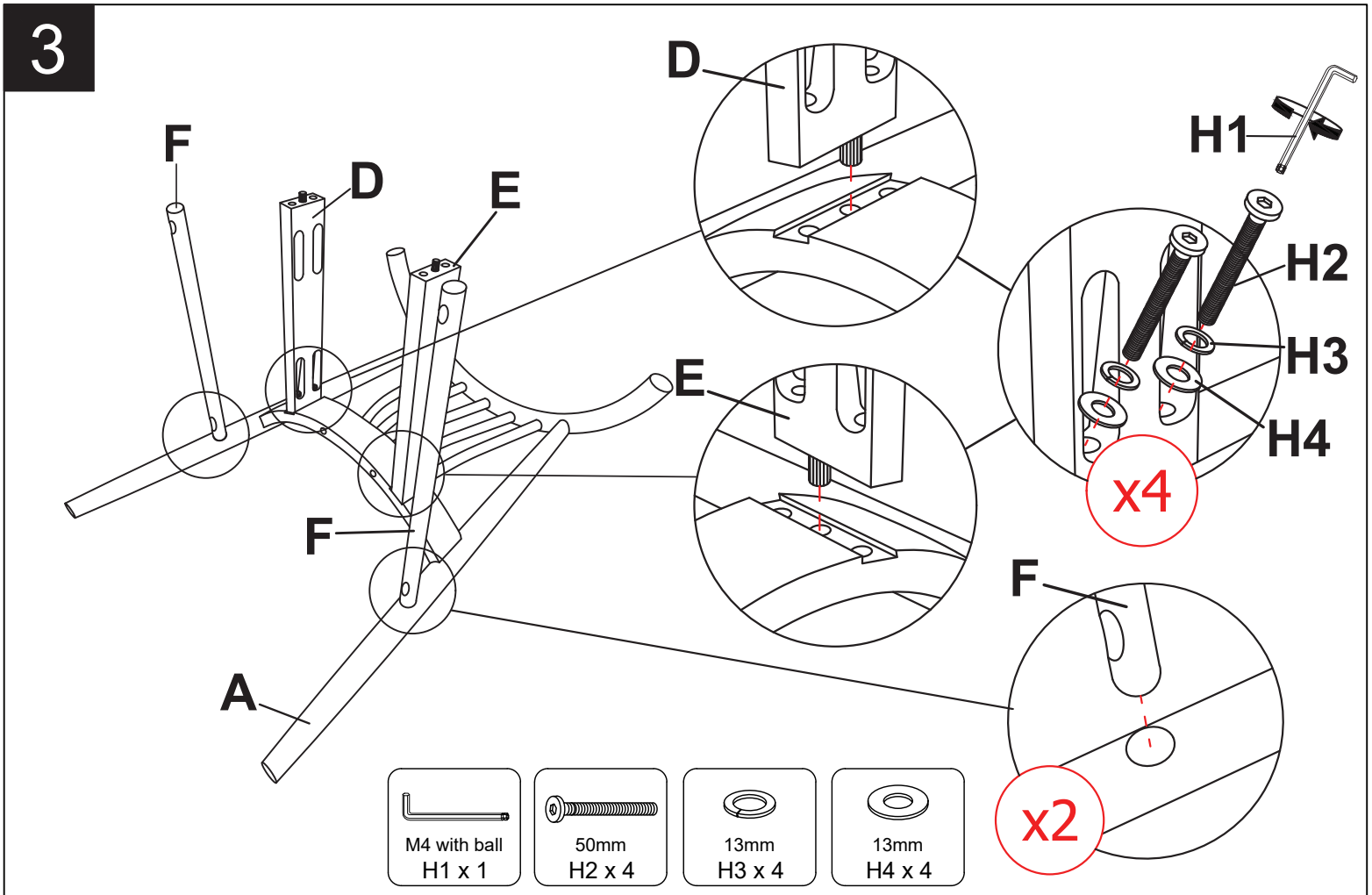
3
D
H1
F
D
E
H2
H3
E
H4
x4
F
F
A
x2
M4 with ball
H1 x 1
50mm
H2 x 4
13mm
H3 x 4
13mm
H4 x 4

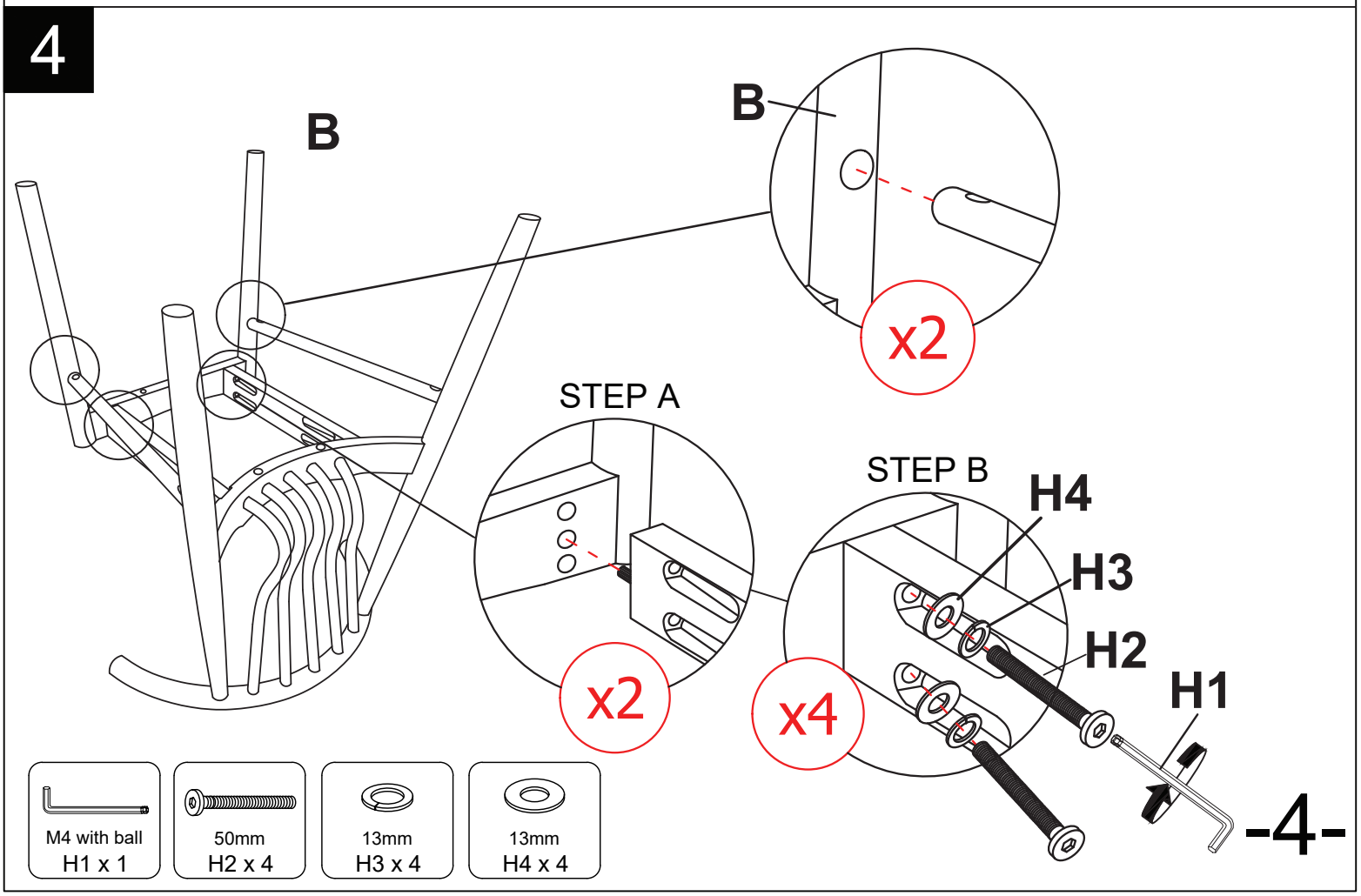
4
B
B
x2
STEP A
STEP B
H4
H3
H2
H1
x2
x4
M4 with ball
H1 x 1
50mm
H2 x 4
13mm
H3 x 4
13mm
H4 x 4

5

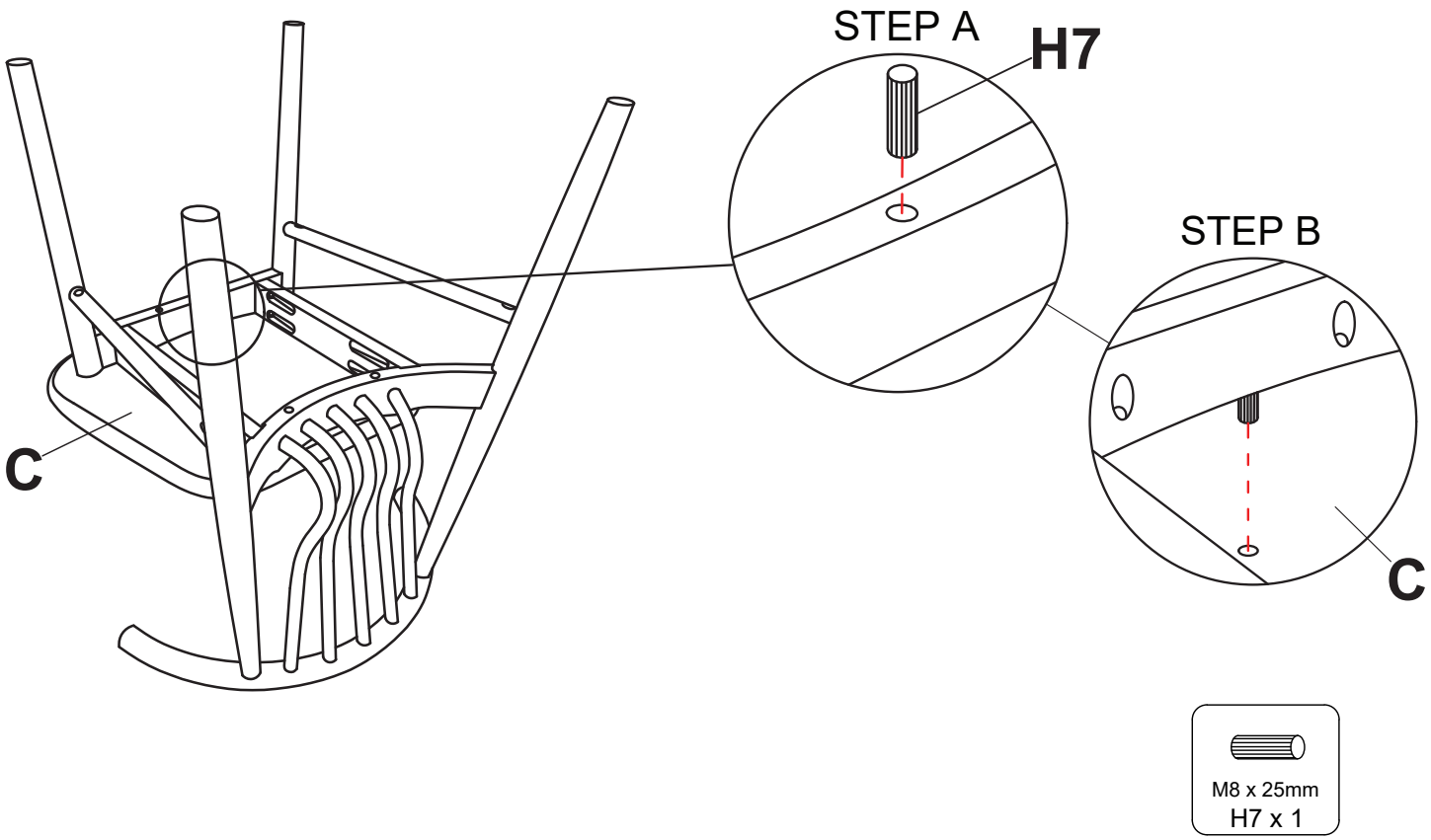

6

