Installation & Assembly

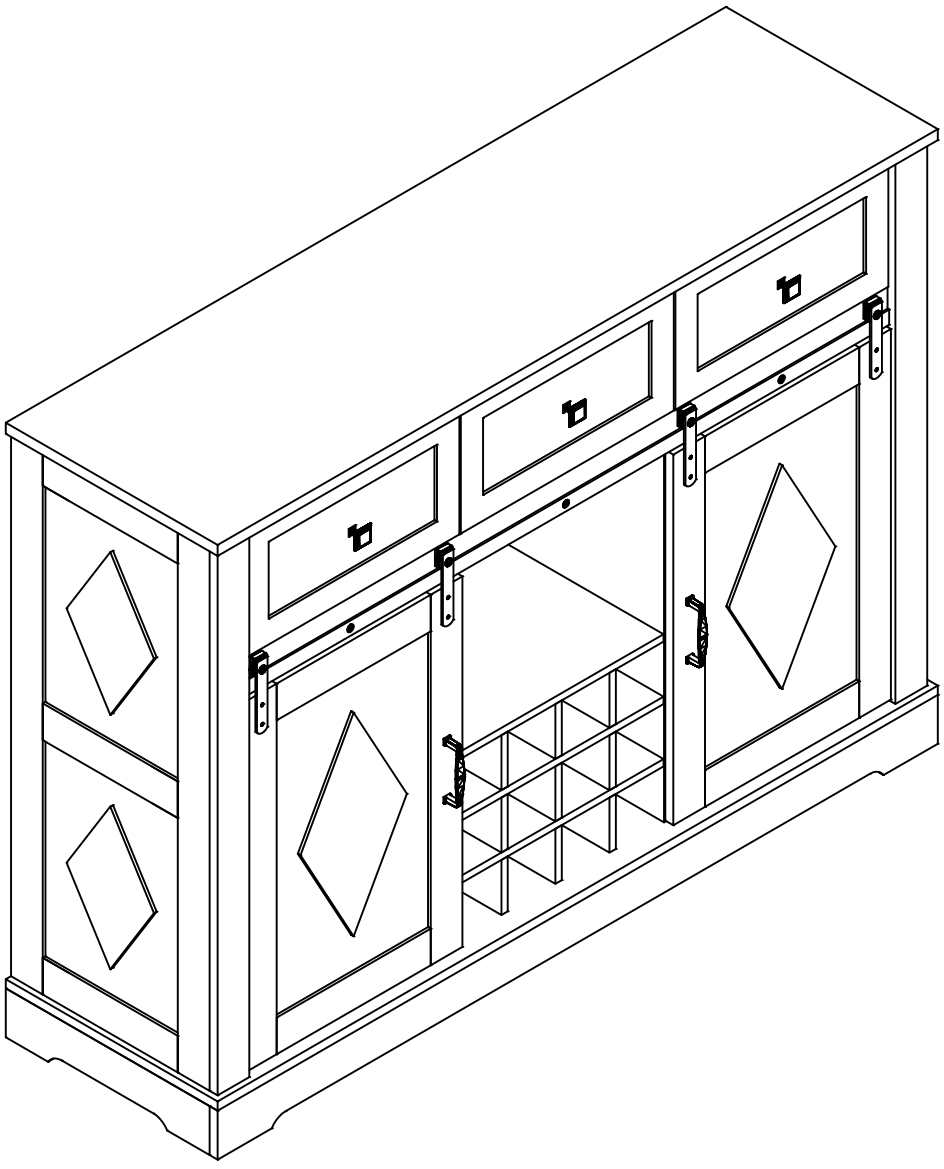

Thanks for purchasing one of ourproducts,
please carefully read the assembly instructions
before installation(Attention:Do not tighten
the screws beforeall screws are in place).

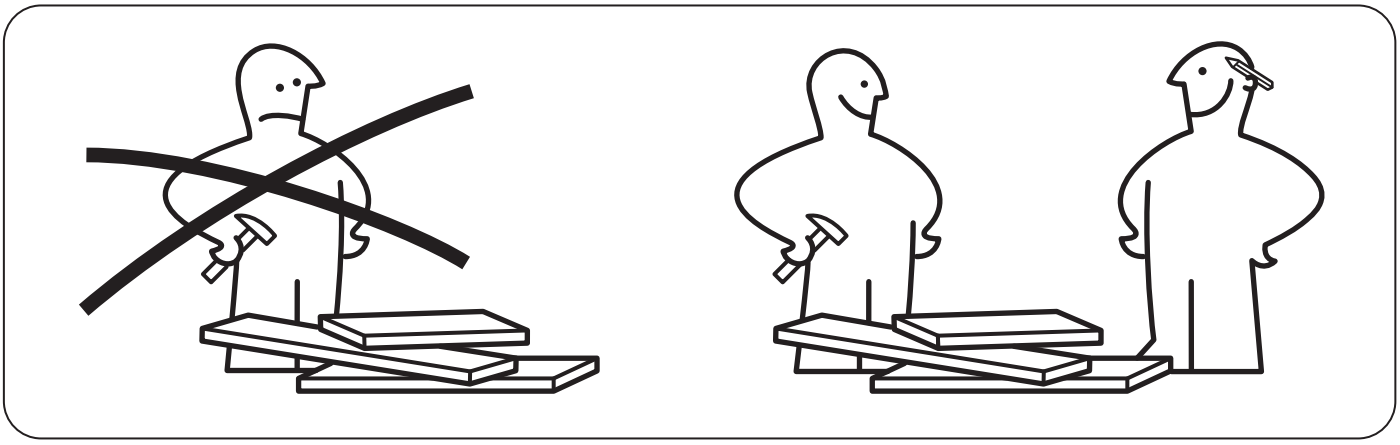

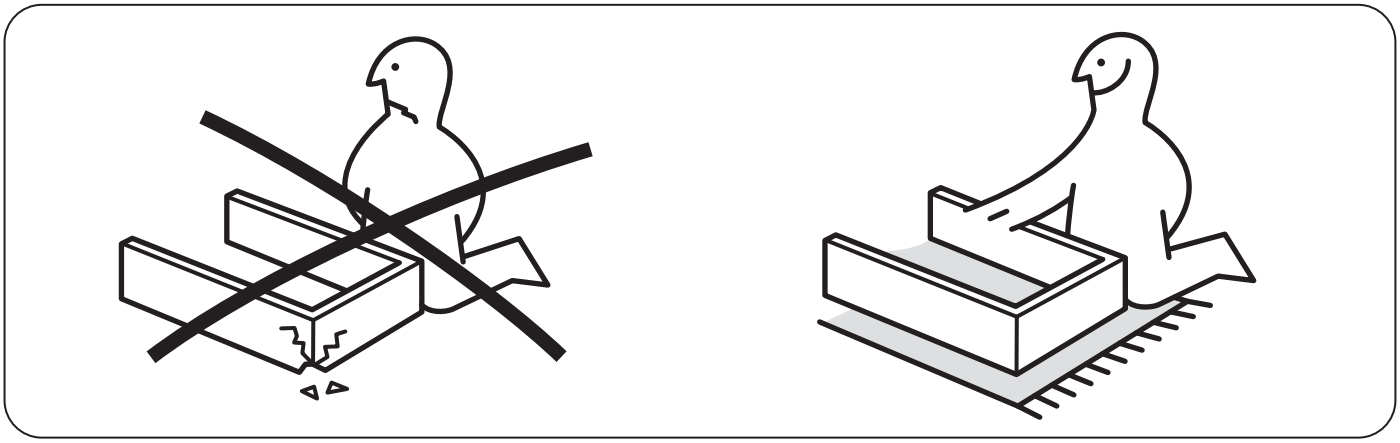

(Tools not provided)
Flat Blade Screwdriver
Phillips Head Screwdriver
Wooden Hammer

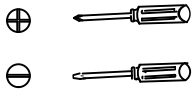



To Assemble the Unit
Wooden Hammer

PAGE1
Exploded View

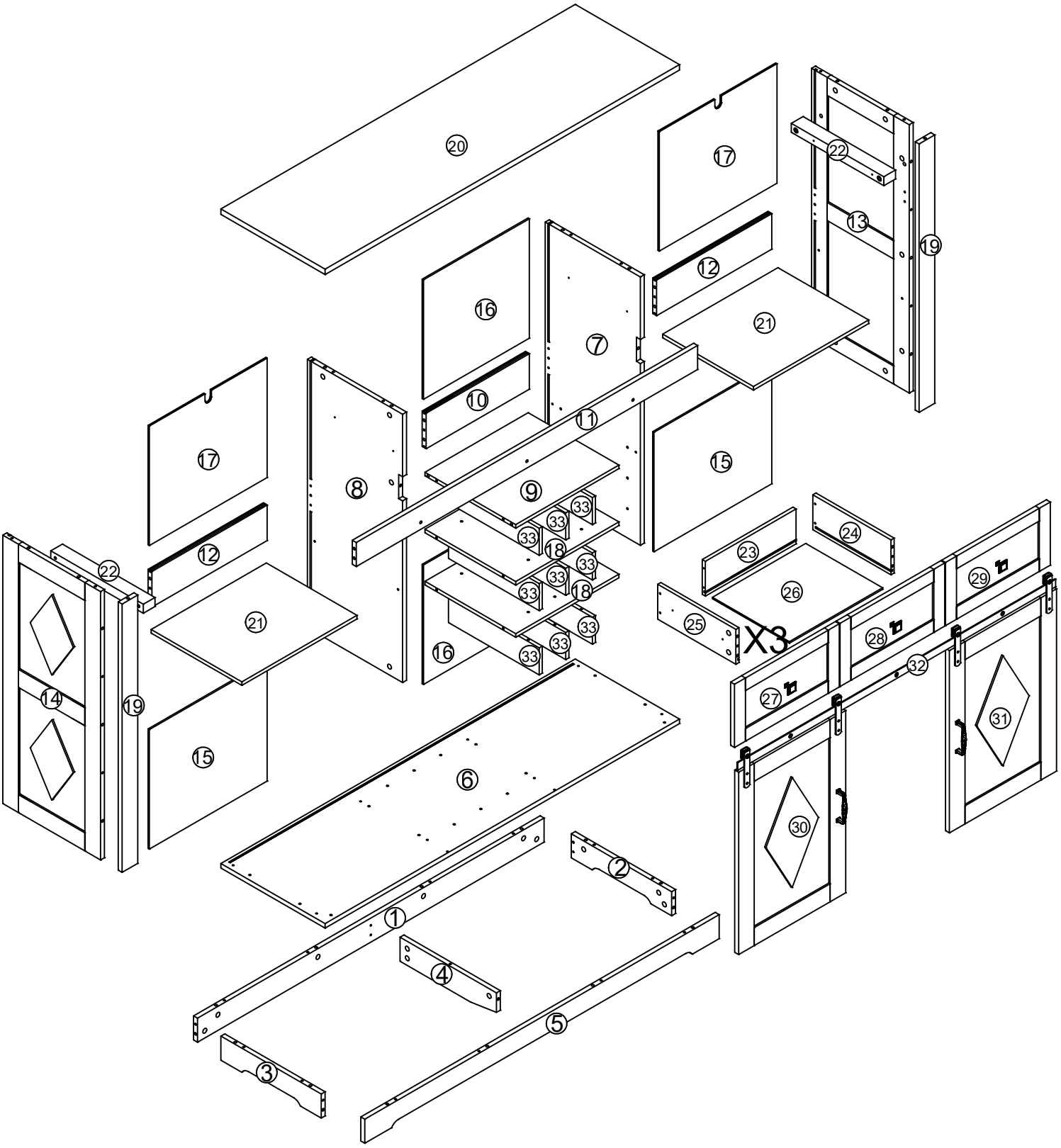

PAGE2
will require these parts

A  75+2PCS	B  75+2PCS	C  M6X30MM 101+2PCS	D  M3.5X12M 24+2PCS
E  M3.5X30M 12+2PCS	F  M6X25M 4PCS	G  2PCS	H 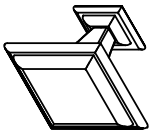 3PCS
I  M4X18M 4PCS	J  M4X8M 3PCS	K  1PC	L  4PCS
M  3PCS	N  M6X45M 3PCS	O  3PCS	P  2PCS
Q  M3.5X16M 8+2PCS	R  3PCS	S  (3*16MM) 12PCS	T 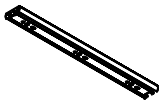 L=290mm 6PCS
U  2PCS	V 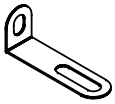 2PCS	W  M3.5X25M 2PCS	X  4PCS
Y  M3.5X14M 2PCS	Z  8PCS		

PAGE3

STEP1 will require these parts

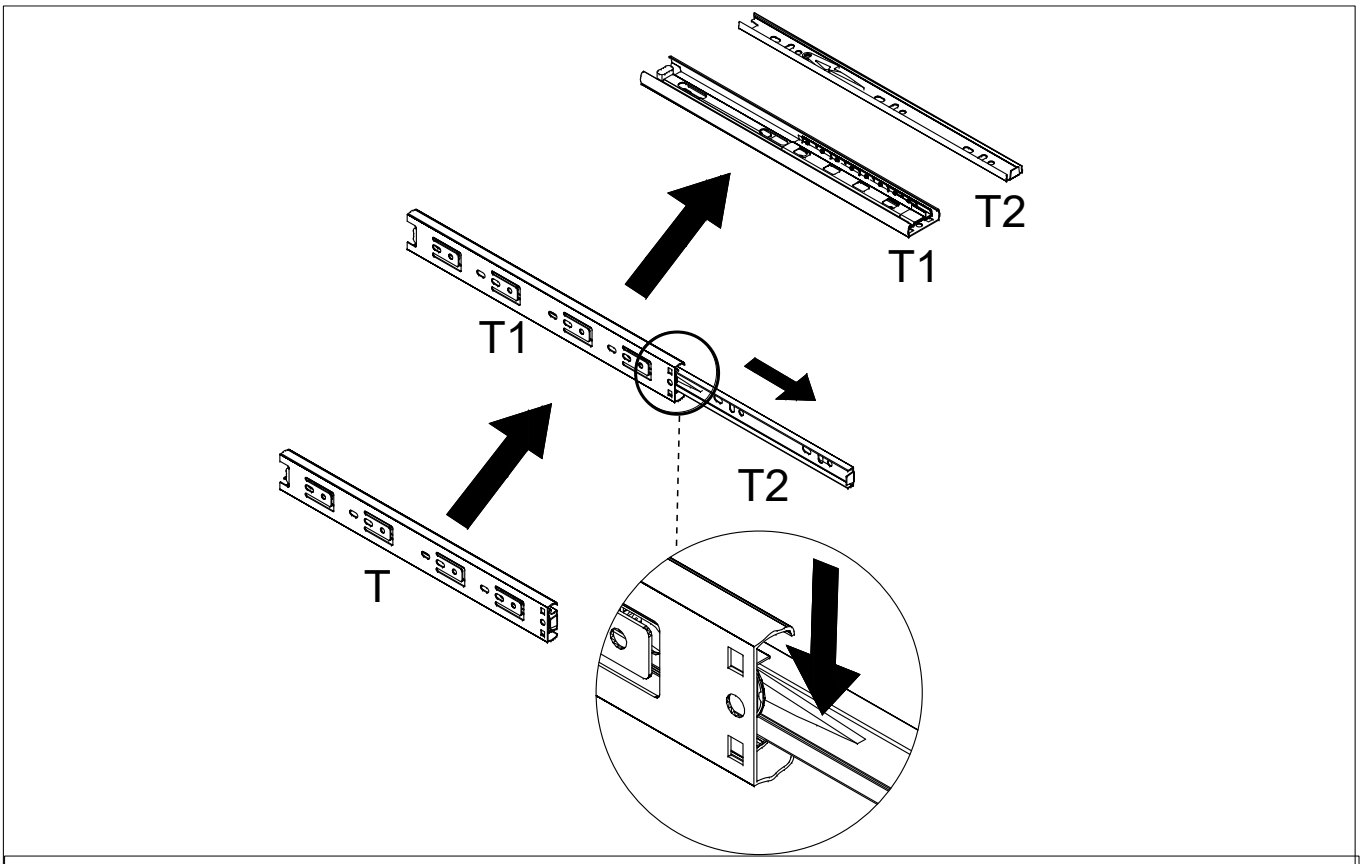

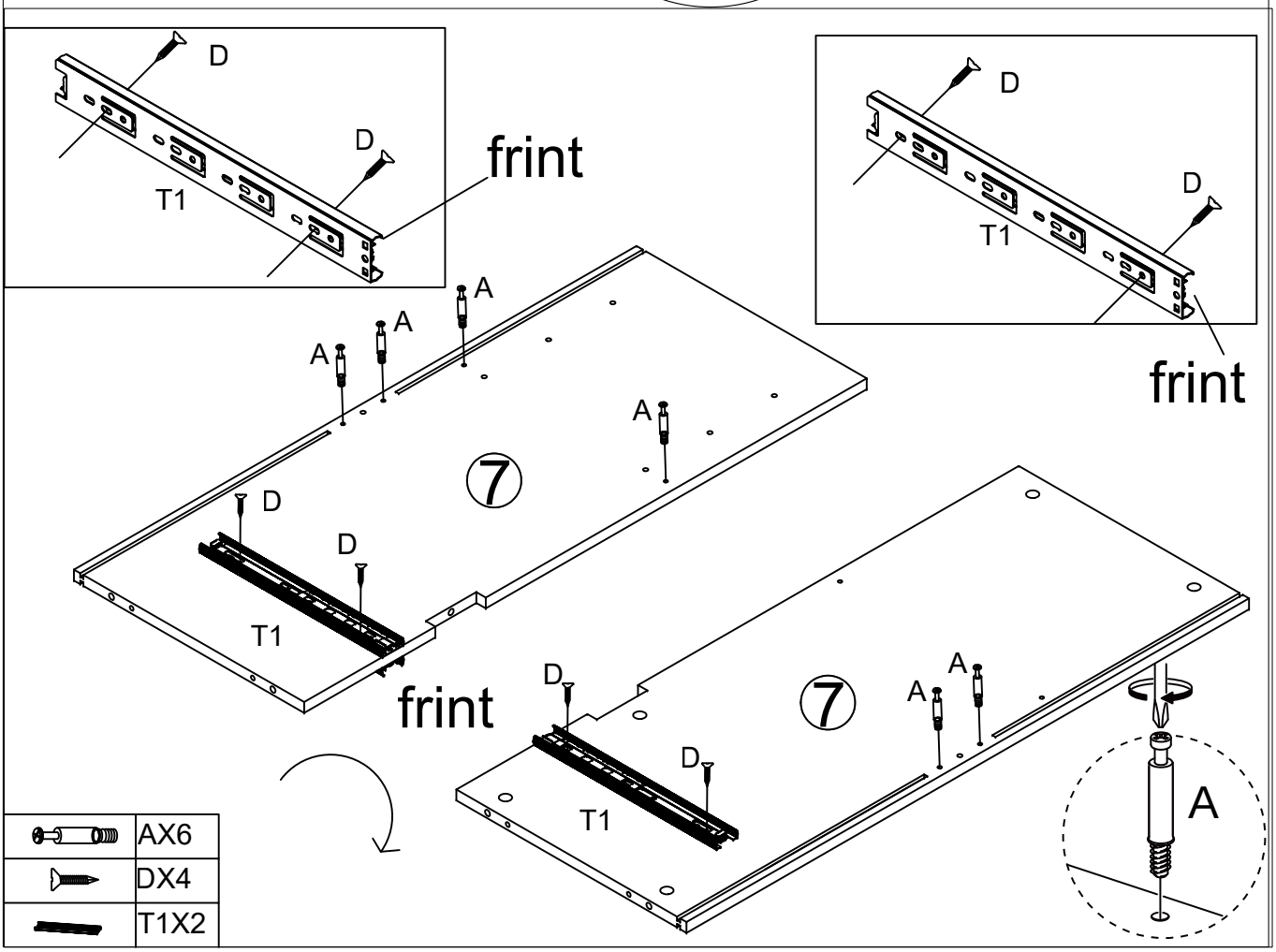

PAGE4

STEP2 will require these parts

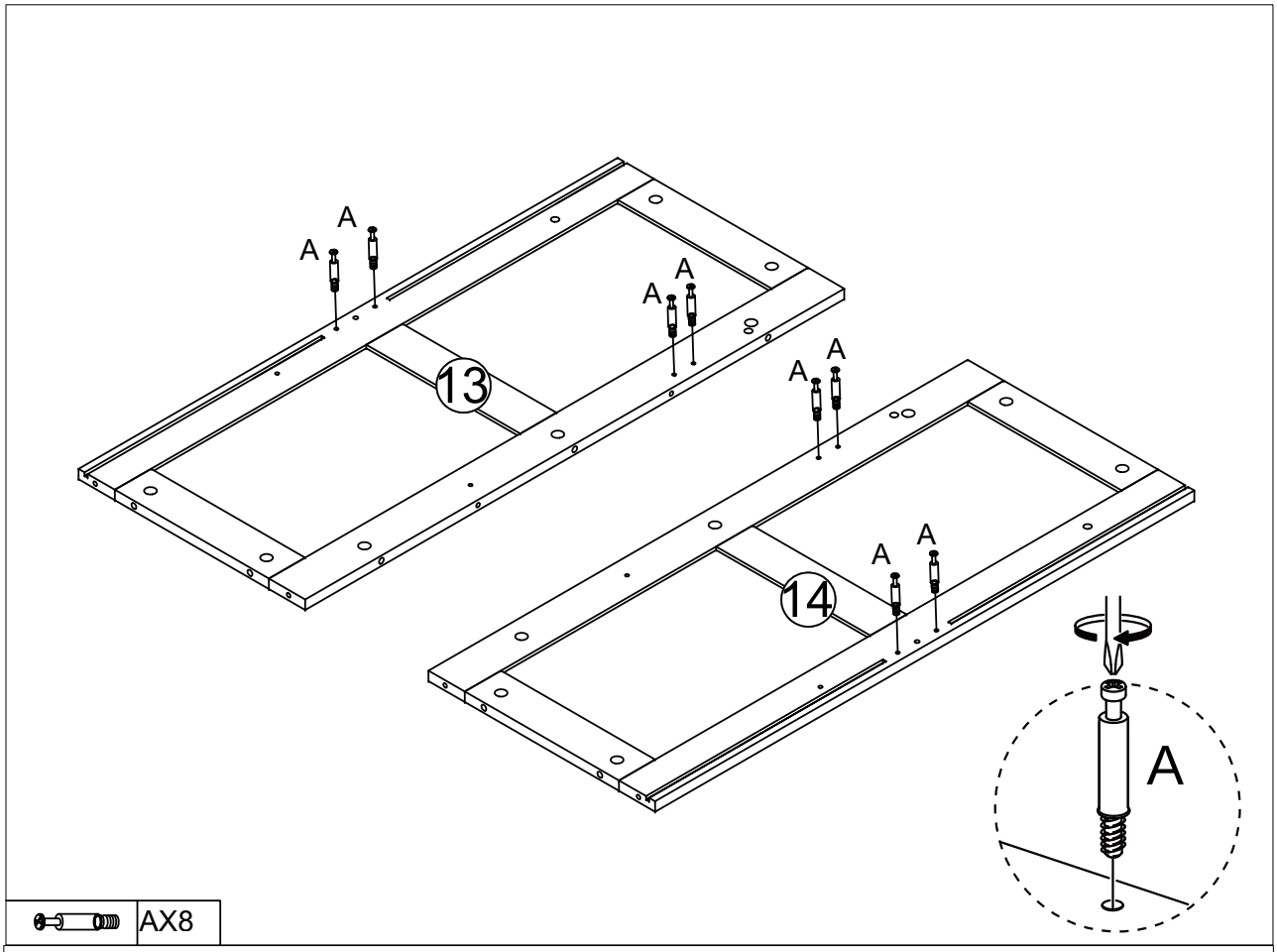

	AX8

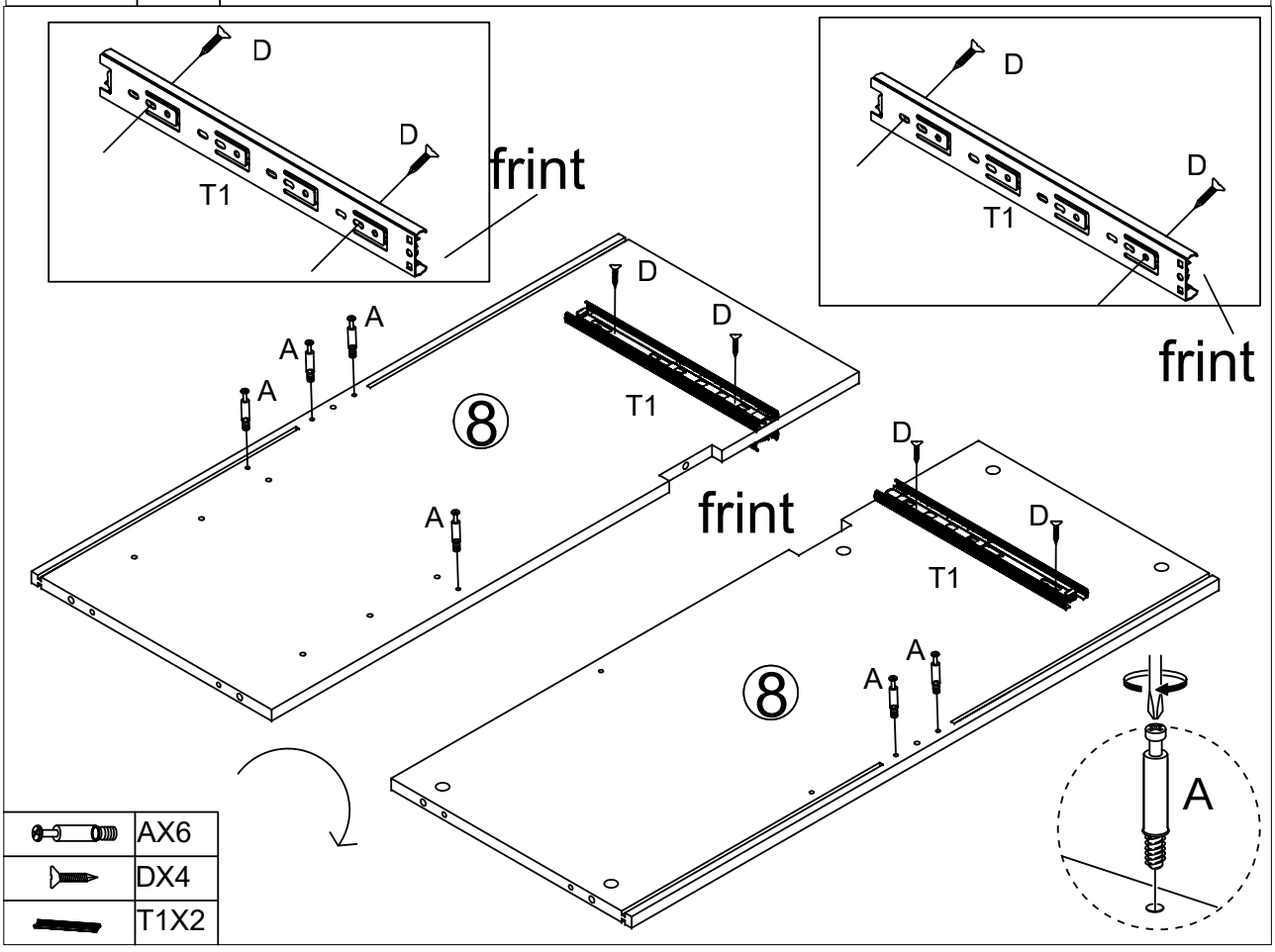

	AX6
	DX4
	T1X2

PAGE5

STEP3 will require these parts

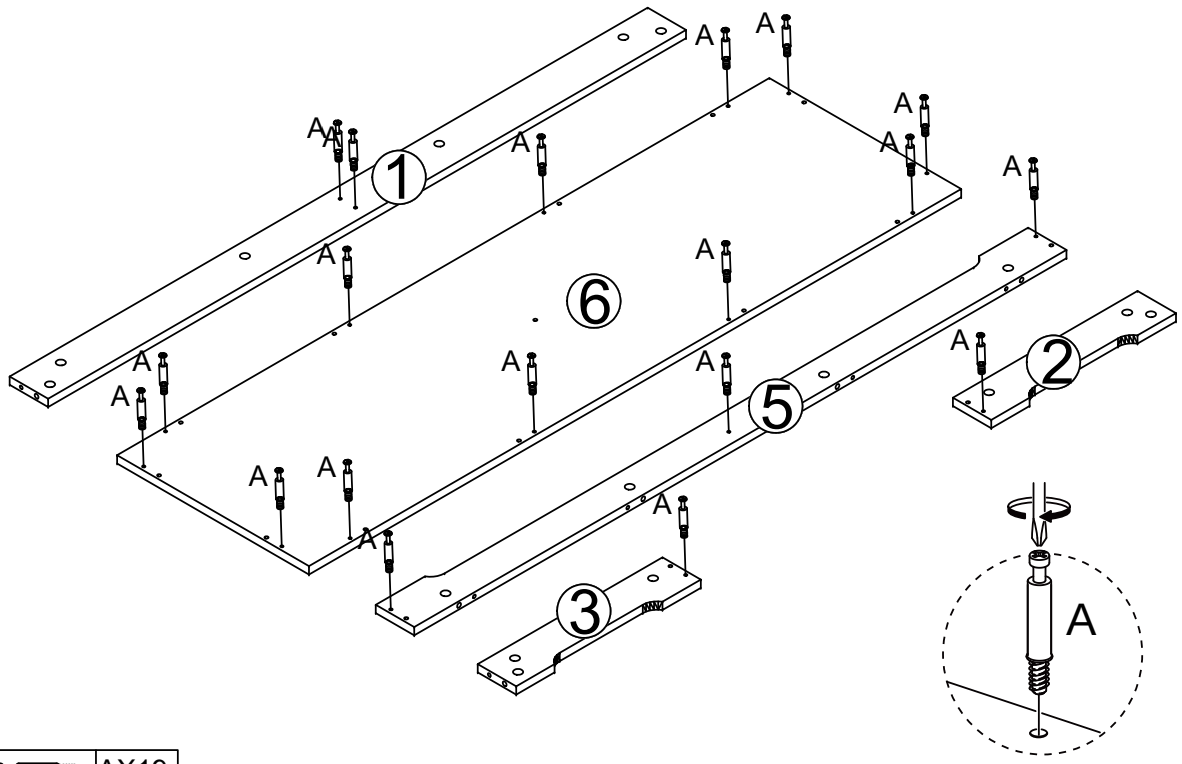

	AX19

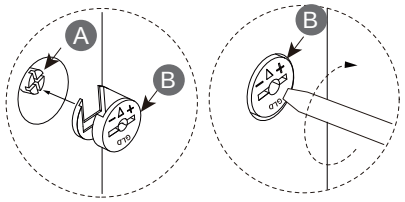

Attention:
Put (B) into the hole and turn (B) clockwise to lock (A) tightly.

	BX4
	CX2

PAGE6

STEP4 will require these parts

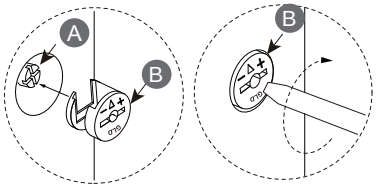

Attention:
Put (B) into the hole and turn (B) clockwise to lock (A) tightly.

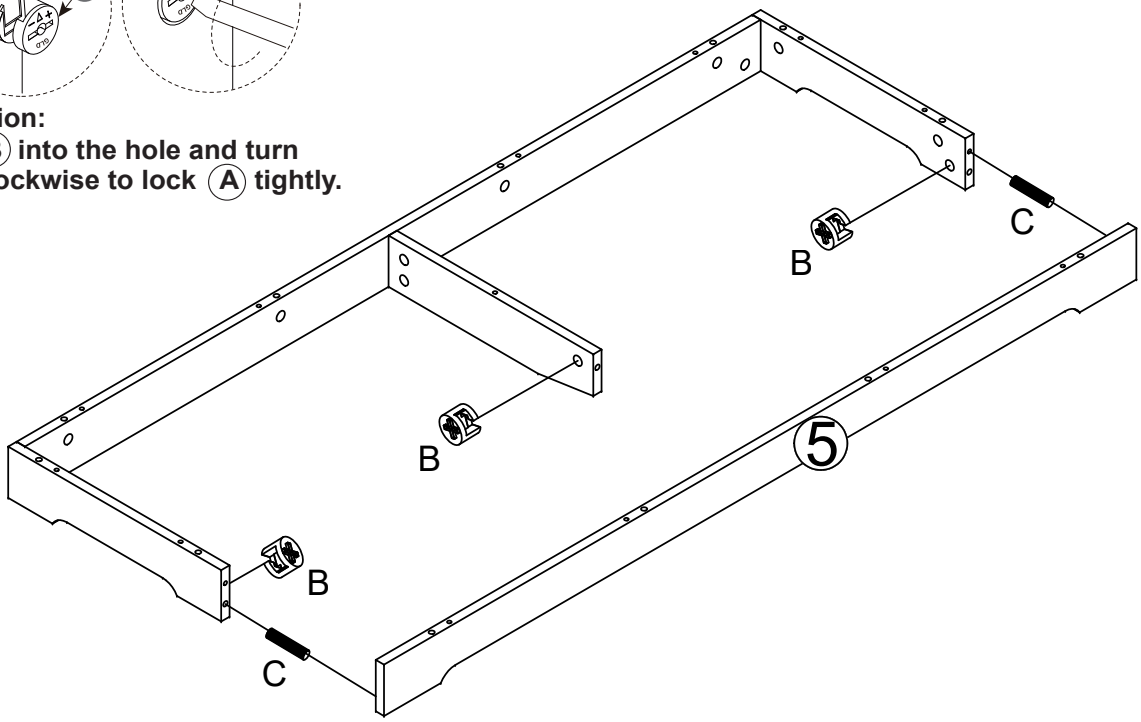

	BX3
	CX2

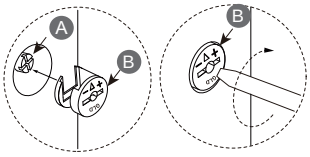

Attention:
Put (B) into the hole and turn (B) clockwise to lock (A) tightly.

	AX8
	BX12
	CX13
	PX2

PAGE7

STEP5 will require these parts

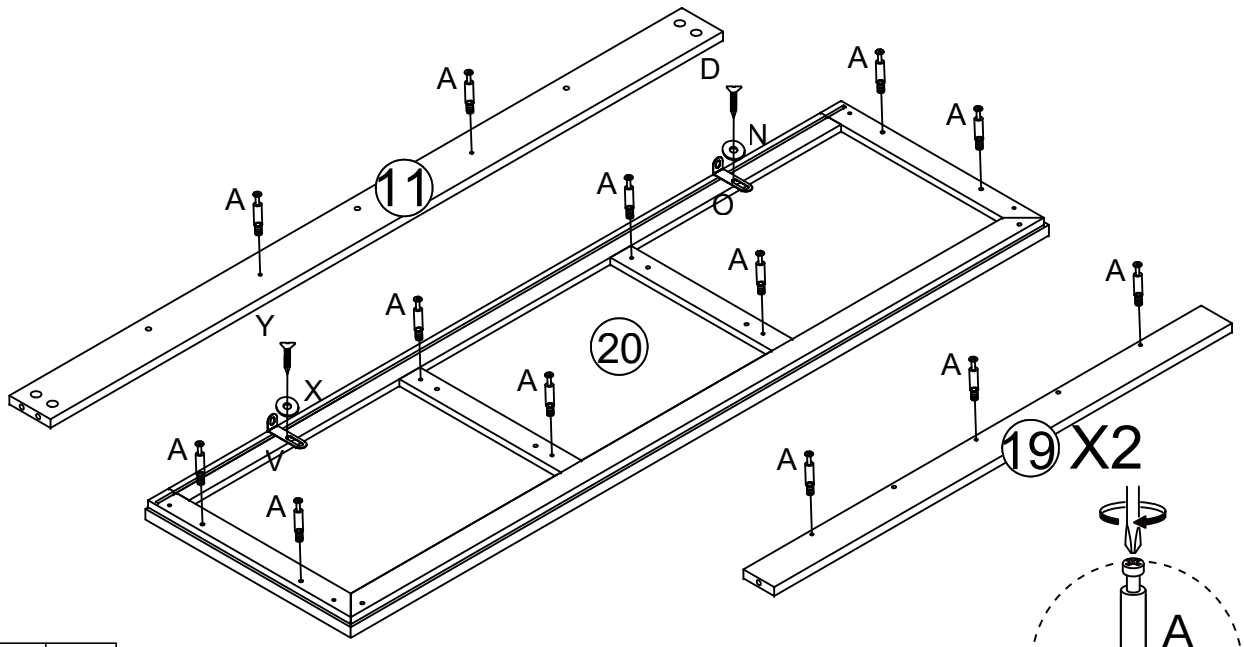

	AX16
	XX2
	VX2
	YX2

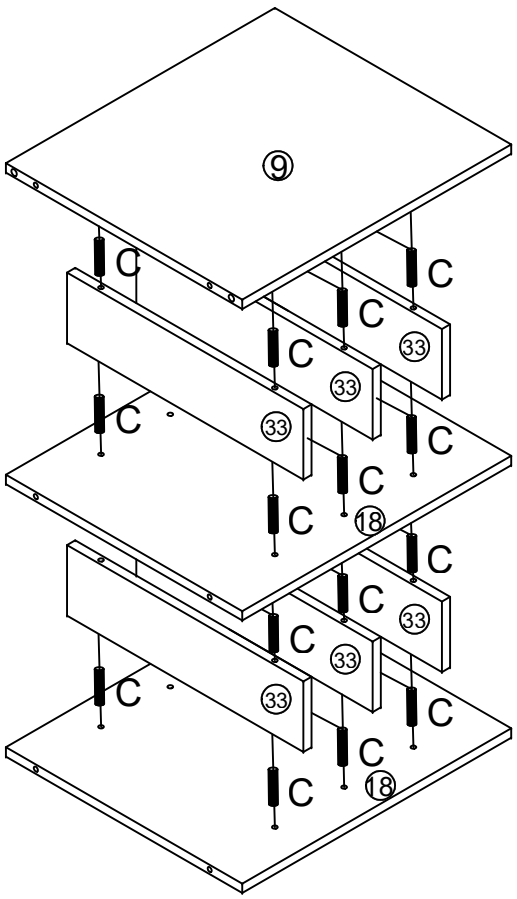

	CX24

STEP6 will require these parts

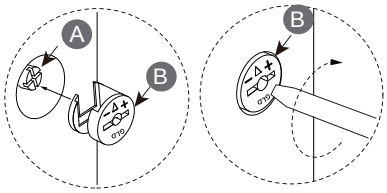

Attention:
Put (B) into the hole and turn (B) clockwise to lock (A) tightly.

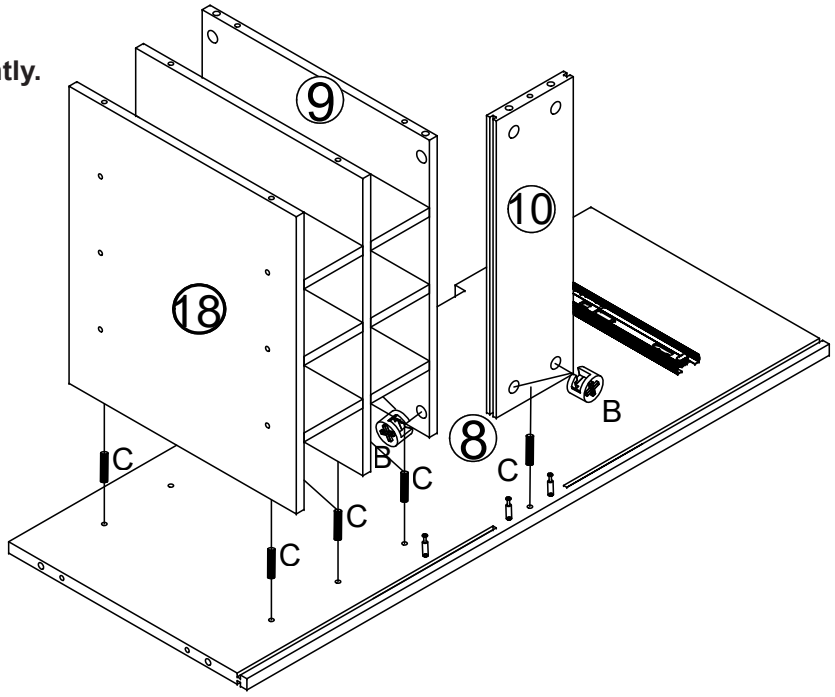

	BX4
	CX7

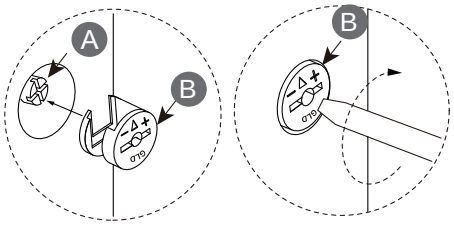

Attention:
Put (B) into the hole and turn (B) clockwise to lock (A) tightly.

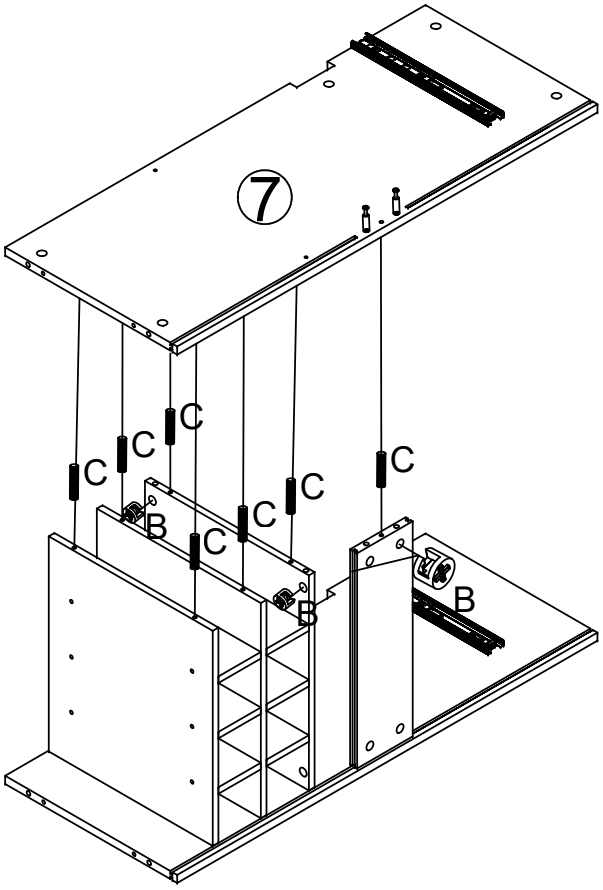

	BX4
	CX7

STEP7 will require these parts

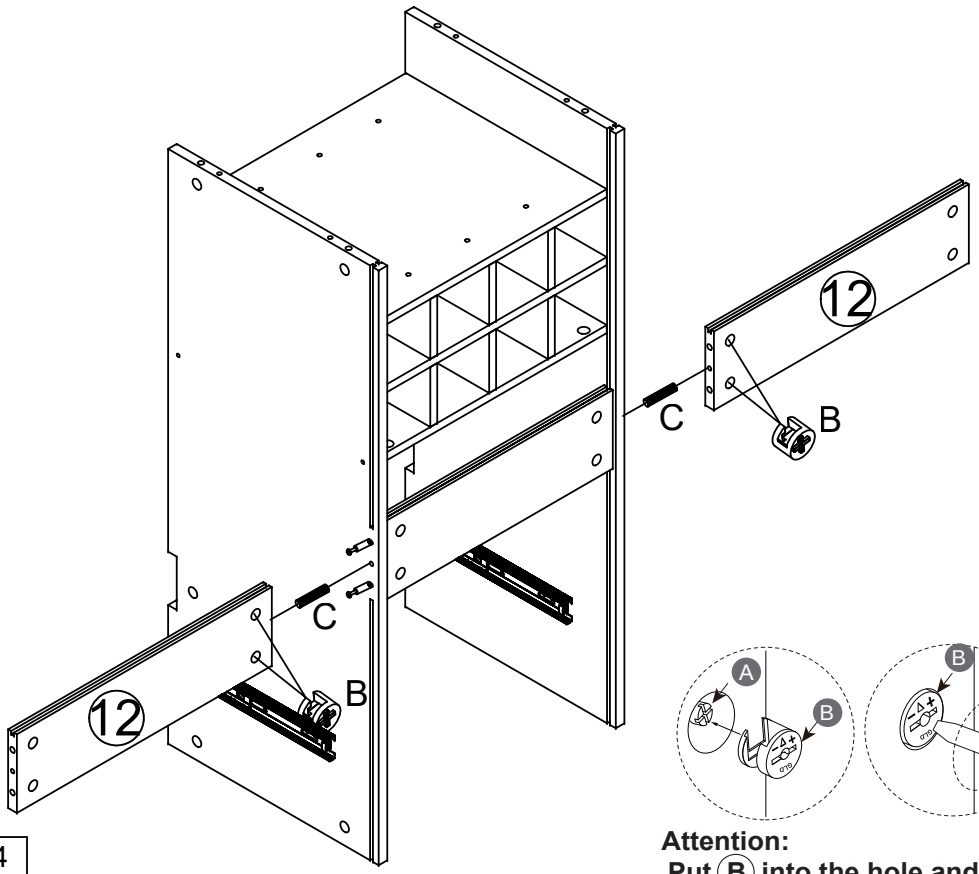

	BX4
	CX2

Attention:
Put (B) into the hole and turn (B) clockwise to lock (A) tightly.

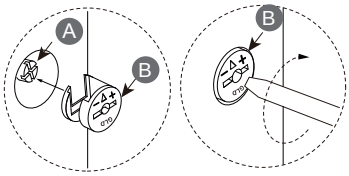

Attention:
Put (B) into the hole and turn (B) clockwise to lock (A) tightly.

	BX2

STEP8

will require these parts

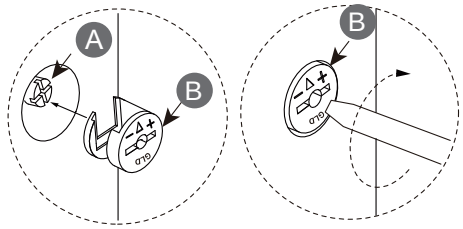

Attention:
Put (B) into the hole and turn (B) clockwise to lock (A) tightly.

	BX8
	CX2

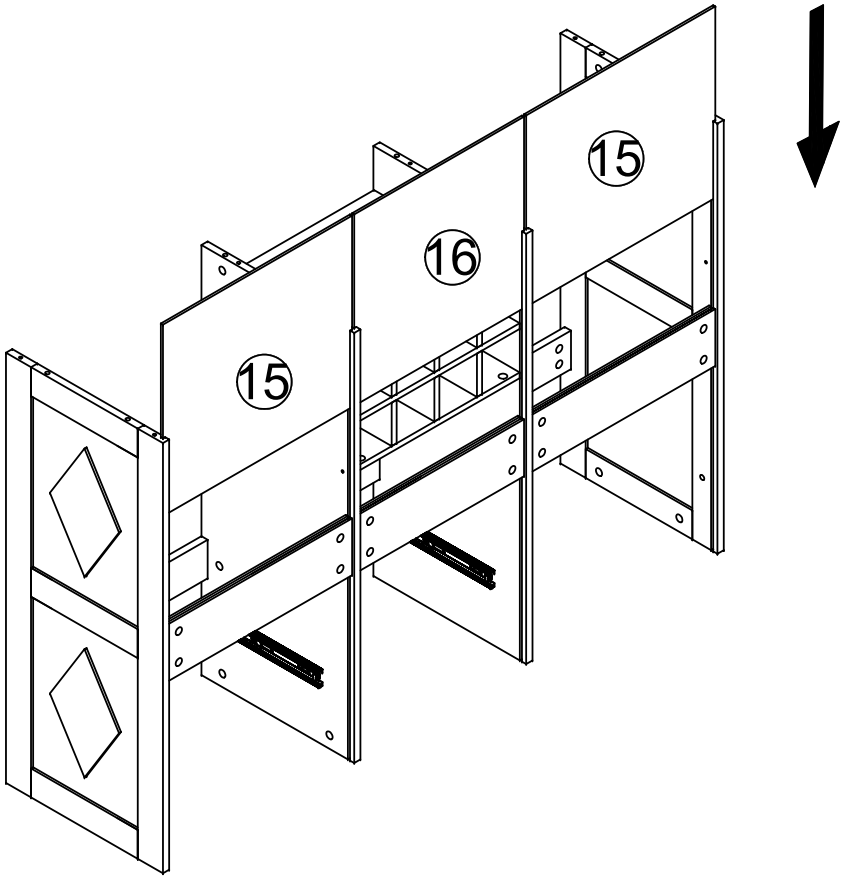

STEP9

will require these parts

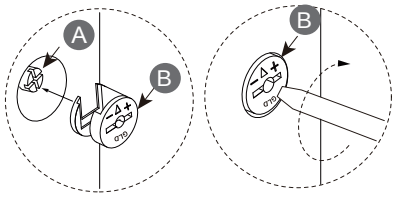

Attention:
Put (B) into the hole and turn (B) clockwise to lock (A) tightly.

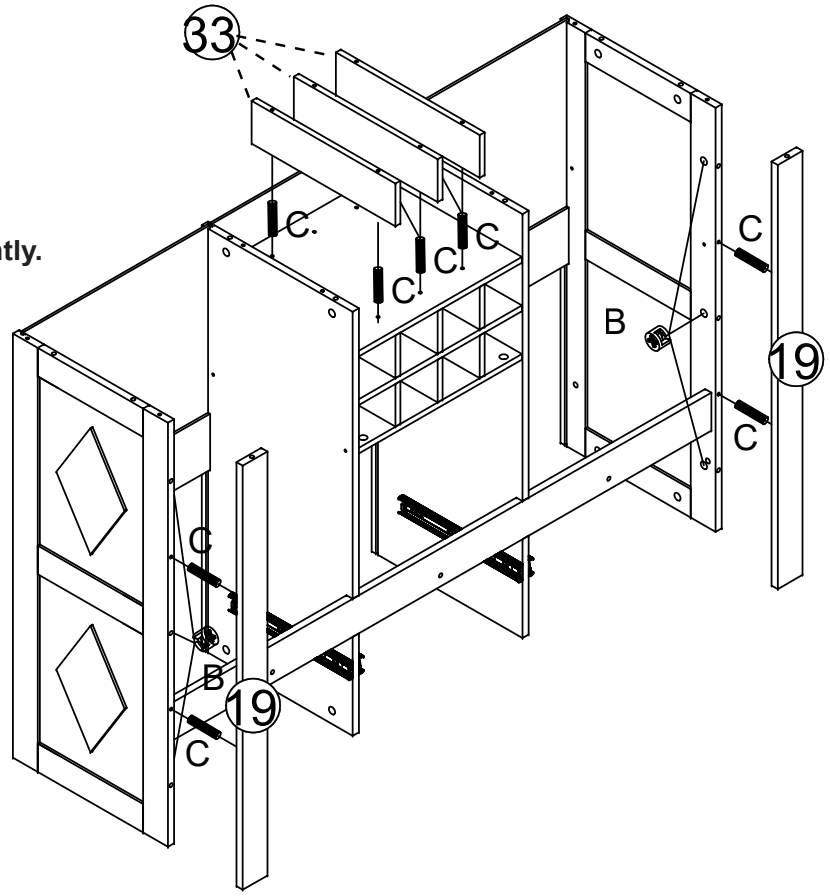

	BX6
	CX10

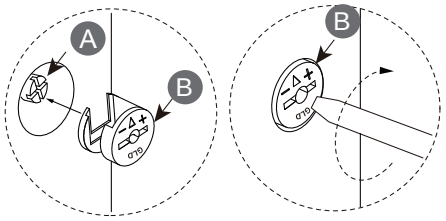

Attention:
Put (B) into the hole and turn (B) clockwise to lock (A) tightly.

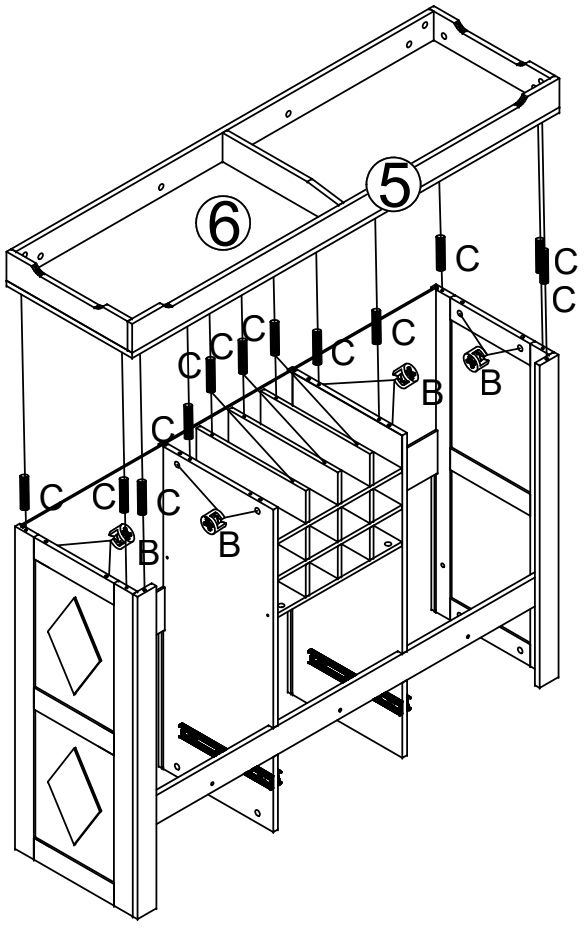

	BX8
	CX16

STEP10

will require these parts

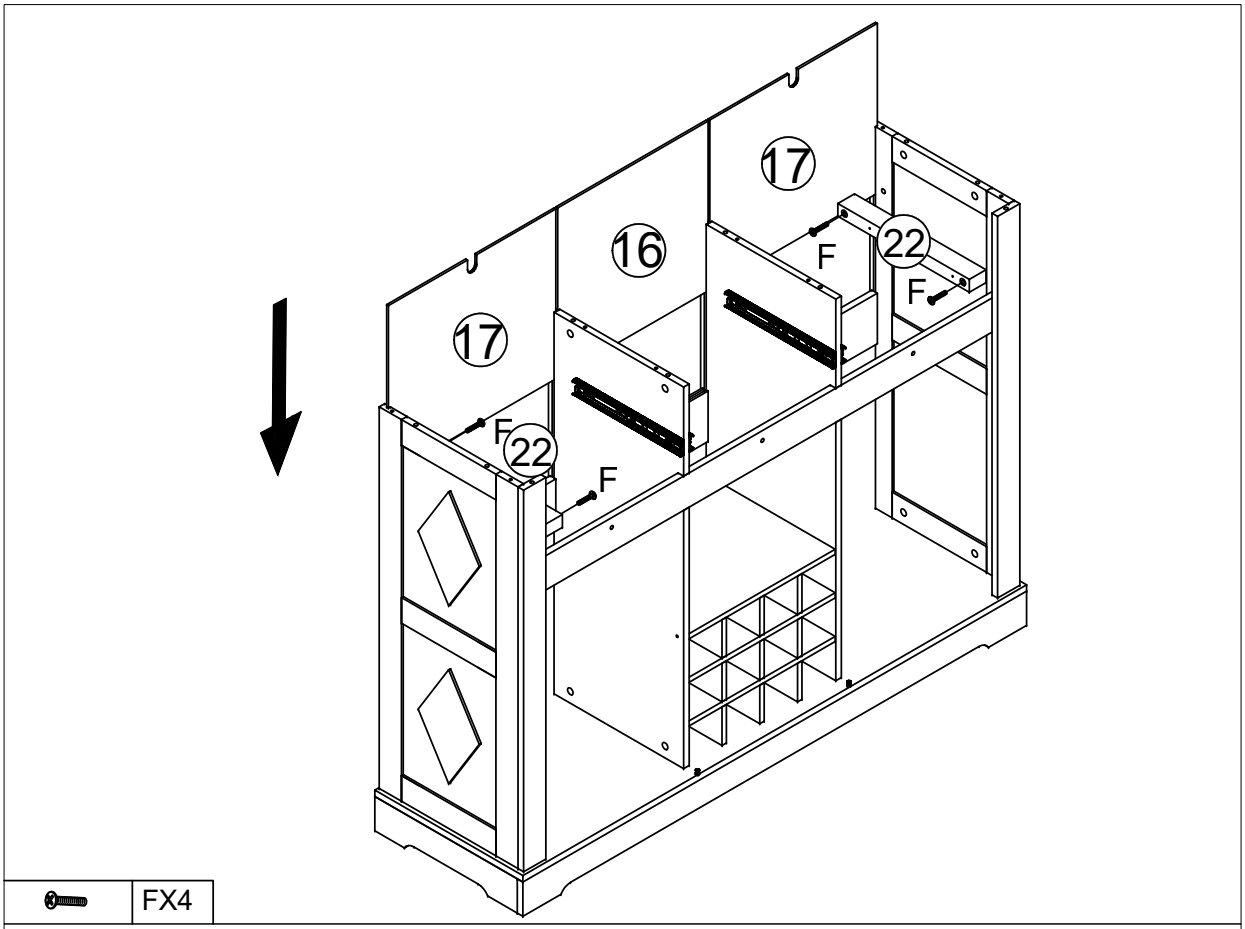

	FX4

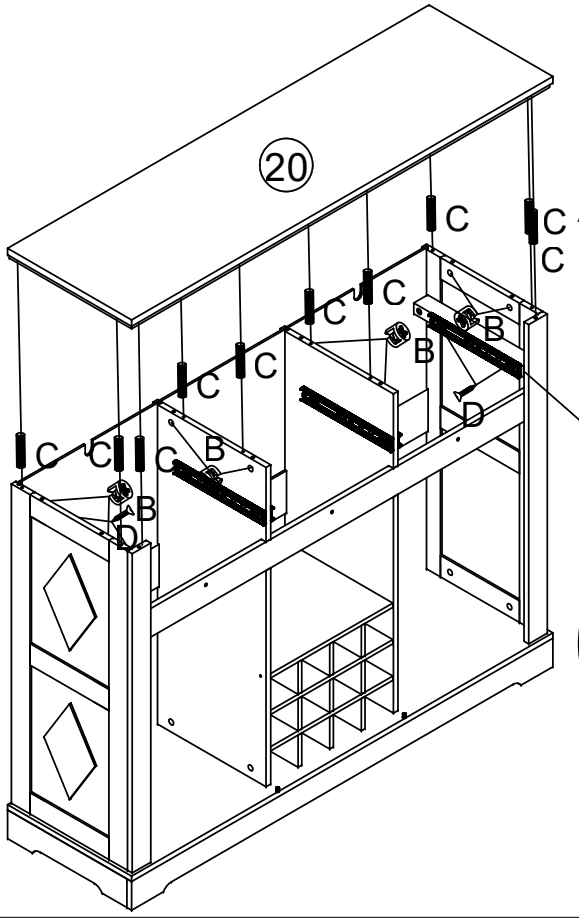

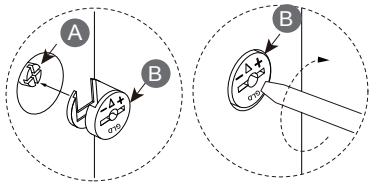

Attention:
Put (B) into the hole and turn (B) clockwise to lock (A) tightly.

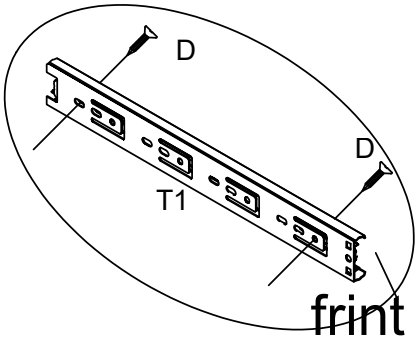

	BX8
	CX10
	DX4
	T1X2

STEP11

will require these parts

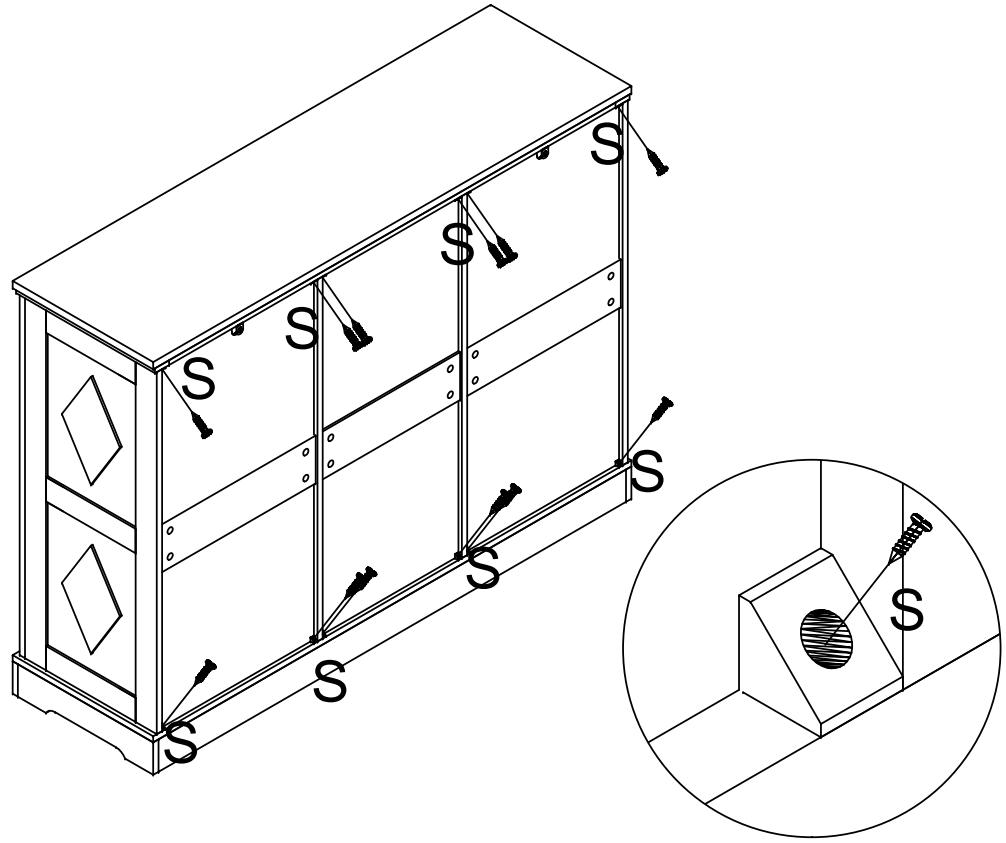

SX12

Drill 2 holes on the wall at the required position for anti-falling device installation.

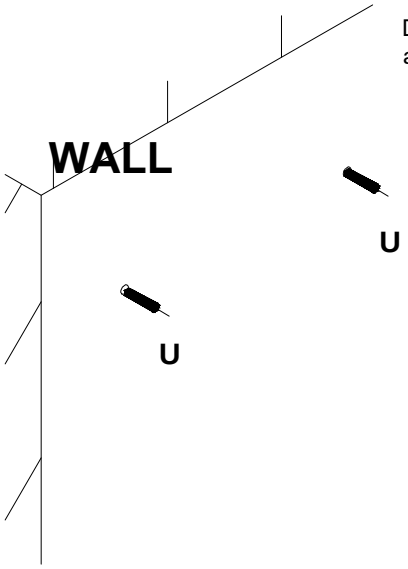

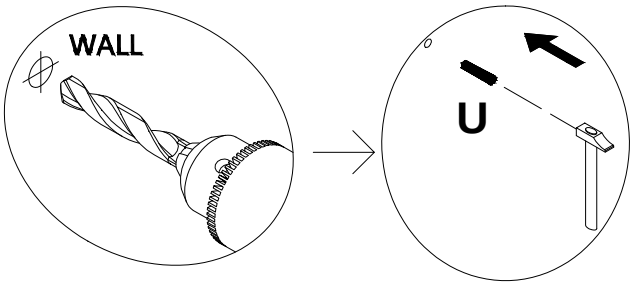

Ux 2

STEP12 will require these parts

Move the cabinet to the required position, use the "W" long screw to fix the cabinet to the wall.

WALL

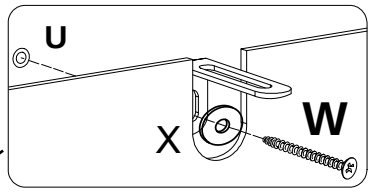

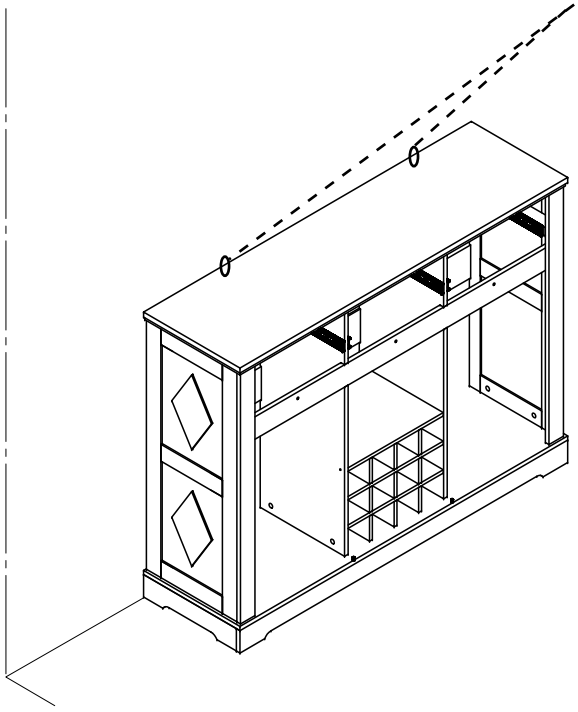

	WX2
	XX2

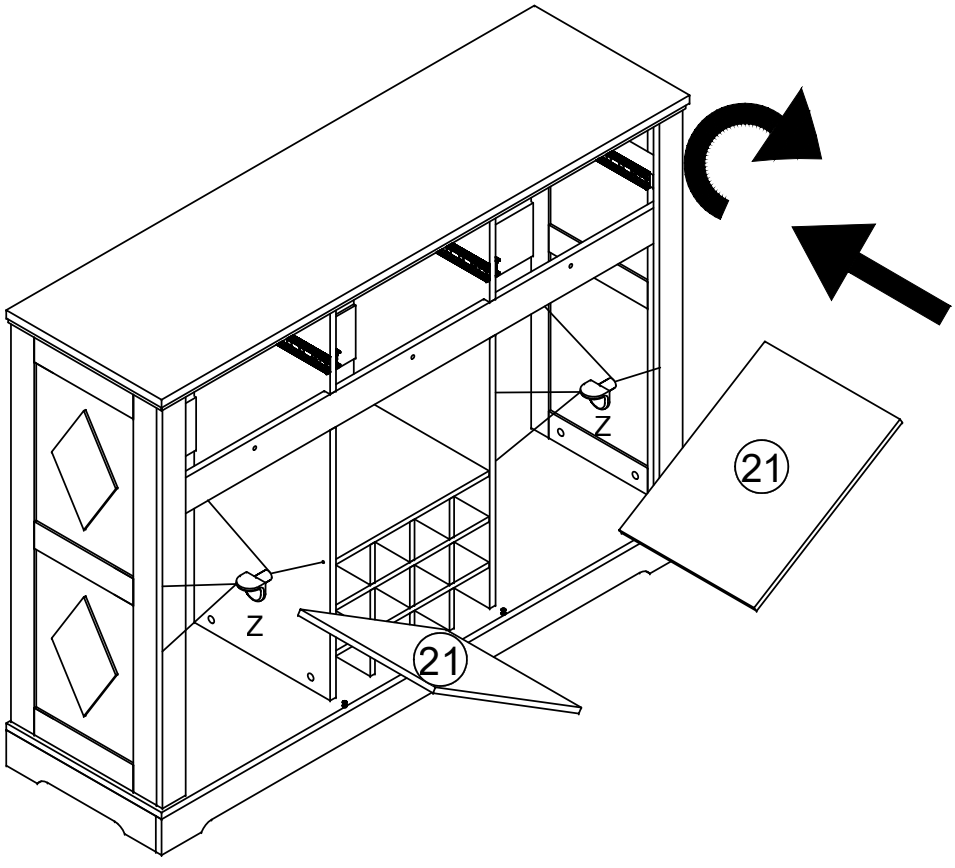

	ZX8

STEP13

will require these parts

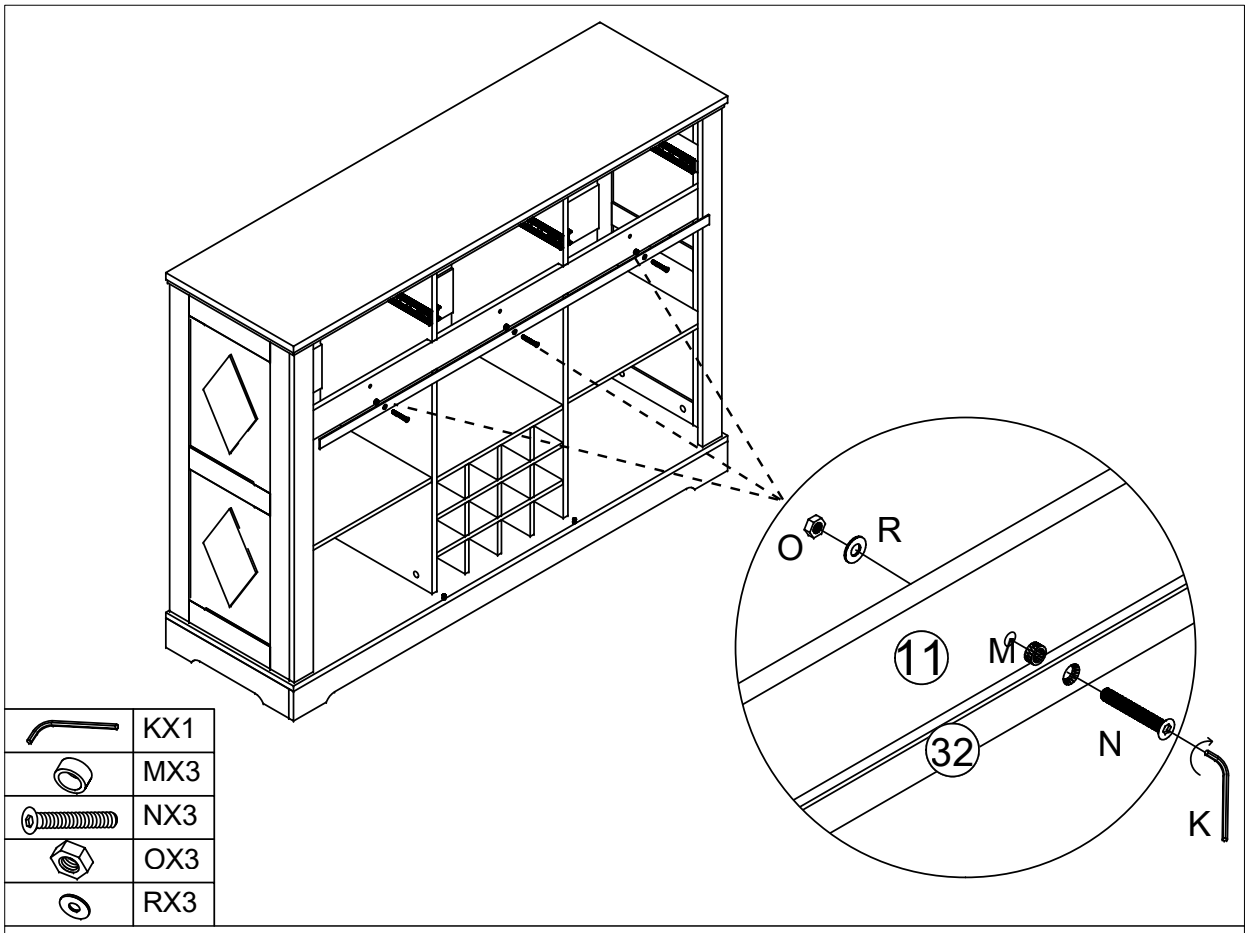

	KX1
	MX3
	NX3
	OX3
	RX3

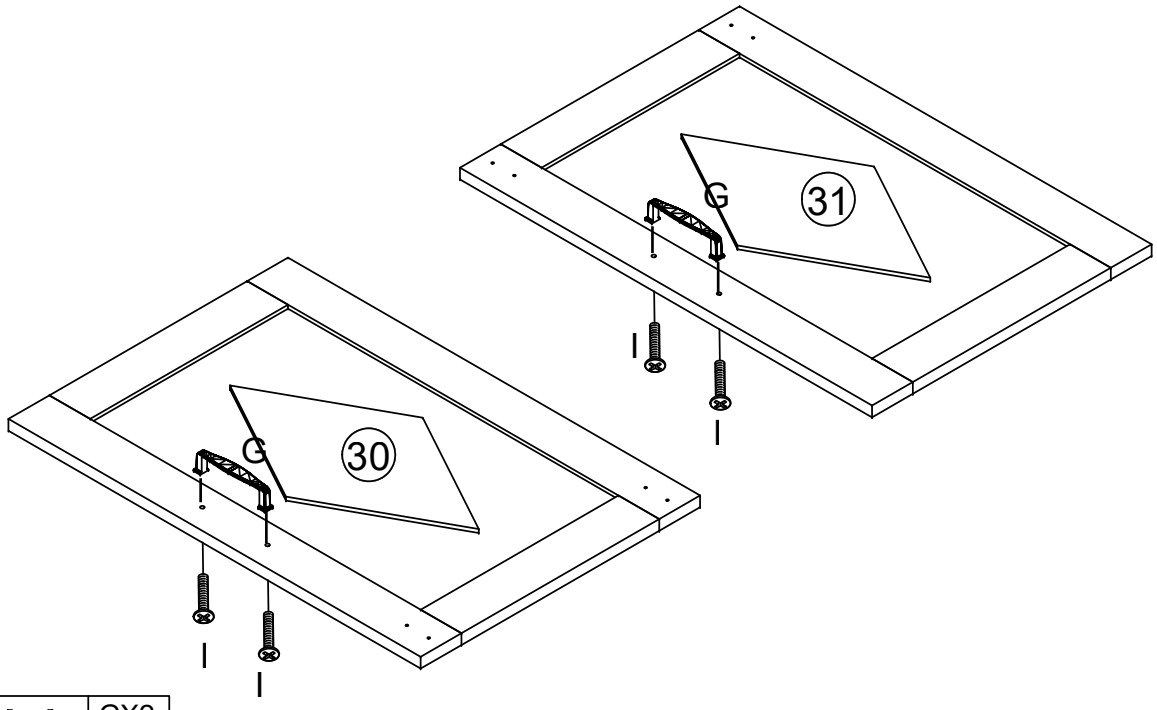

	GX2
	IX4

STEP14

will require these parts

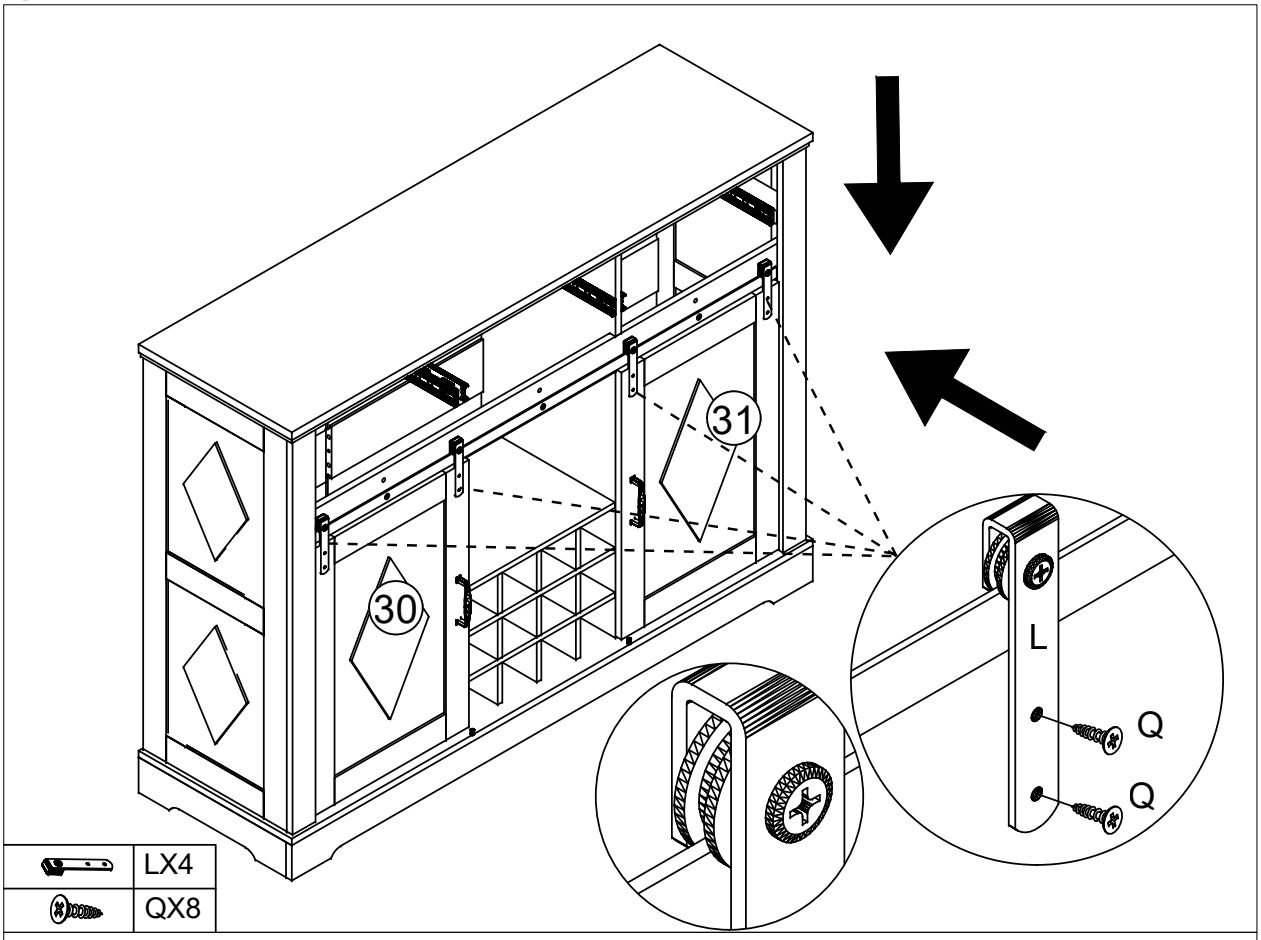

	LX4
	QX8

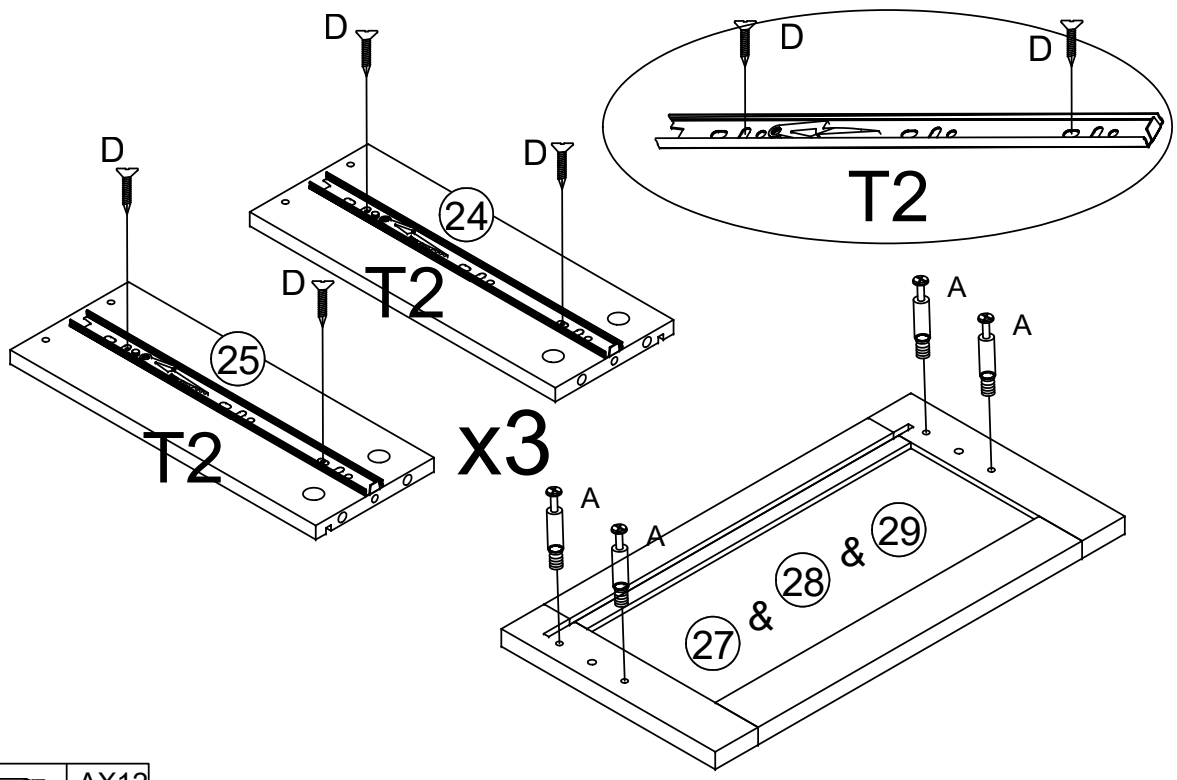

	AX12
	DX12
	T2X6

PAGE17

STEP15 will require these parts

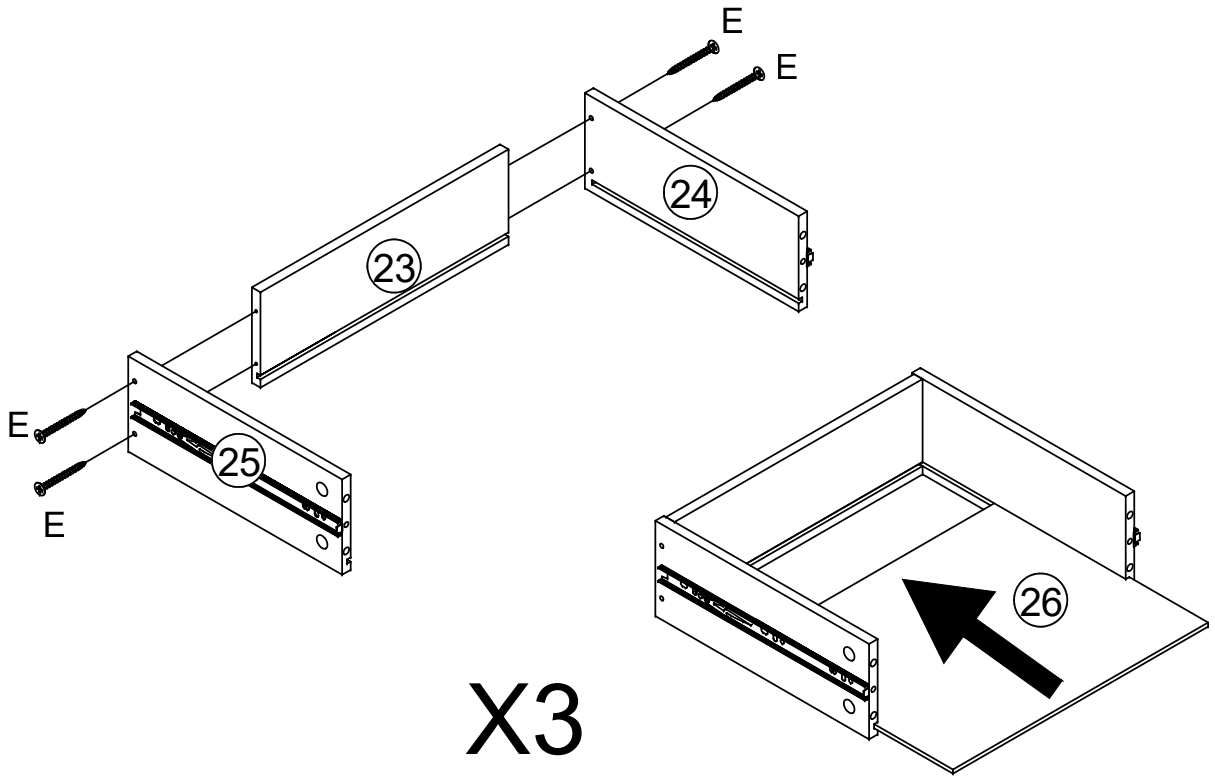

	EX12

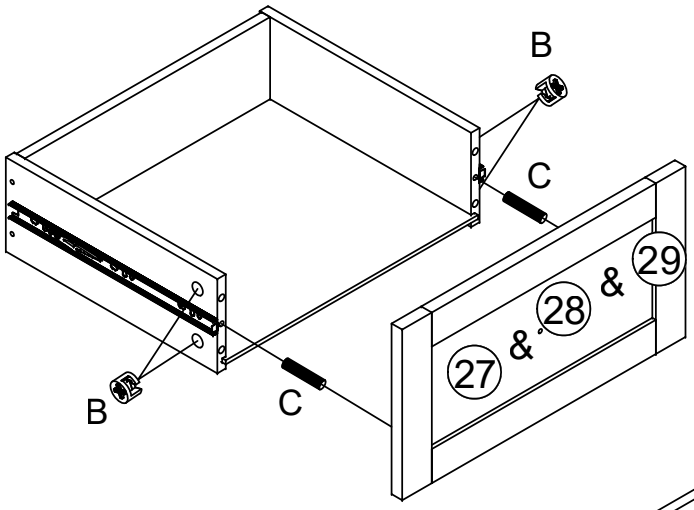

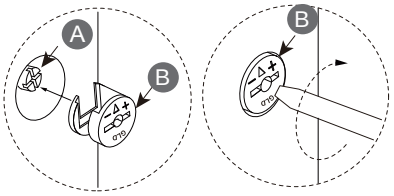

Attention:
Put (B) into the hole and turn (B) clockwise to lock (A) tightly.

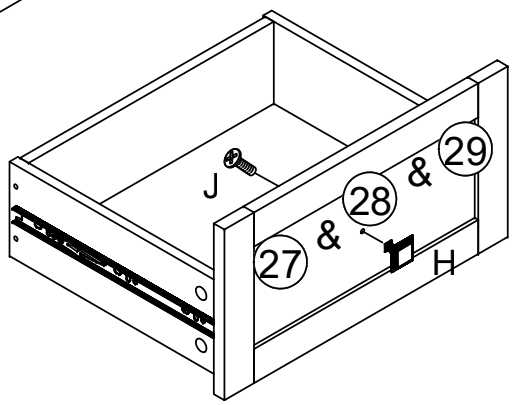

	BX12
	CX6
	HX3
	JX3

PAGE18

STEP16 will require these parts

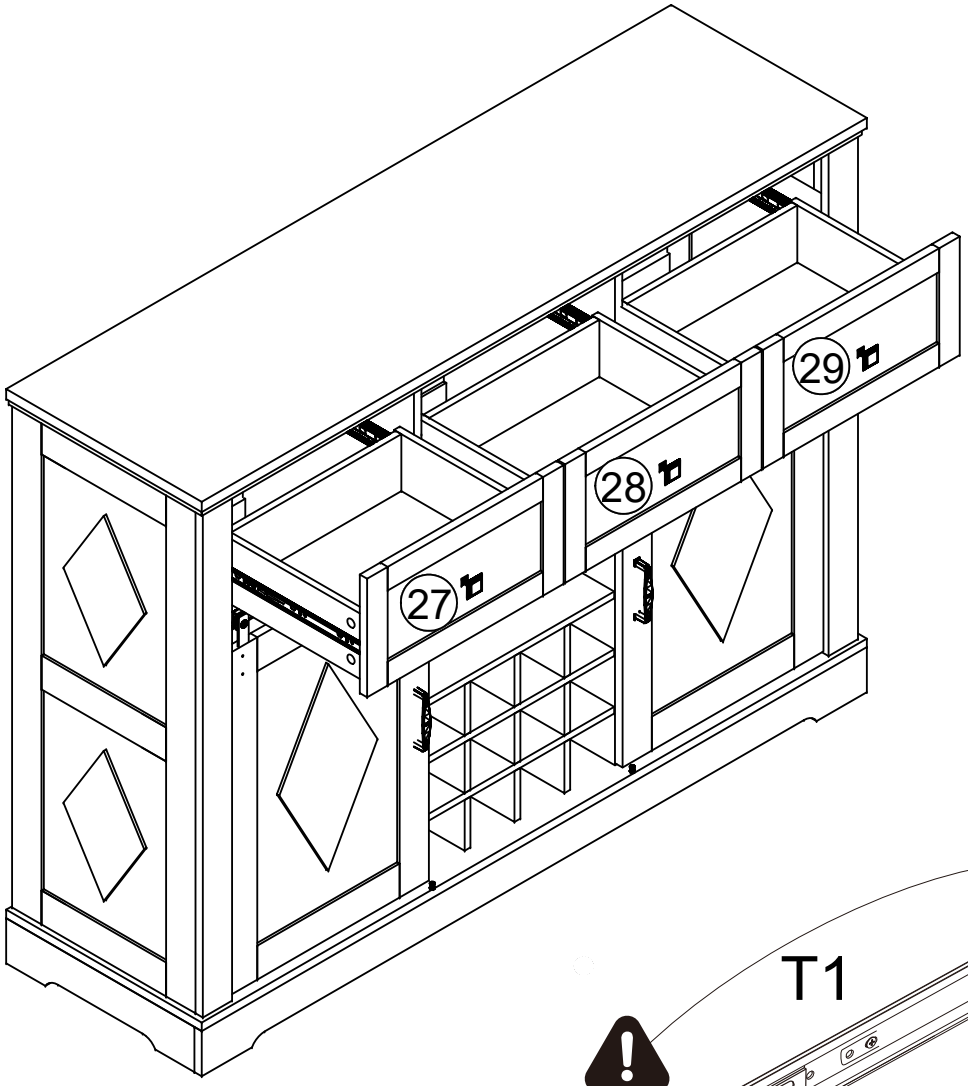

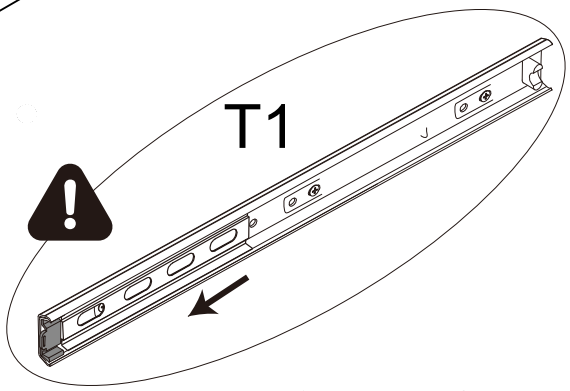

Make sure all the sliders on the front end

EN: 1, Drawers must be **horizontally put into** the cabinet
2, Make sure both side sliders **match well** to avoid damage

Wrong: "T1" and "T2 " are not be horizontally placed and pushed

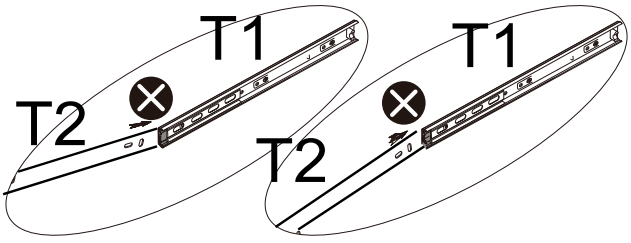

Right: Push "T2 "and "T1" horizontally until you hear a "click"

