FSC
www.fsc.org
100%
Wood from well-managed forests
FSC® C183324

Power Left Chair

Assembly Manual

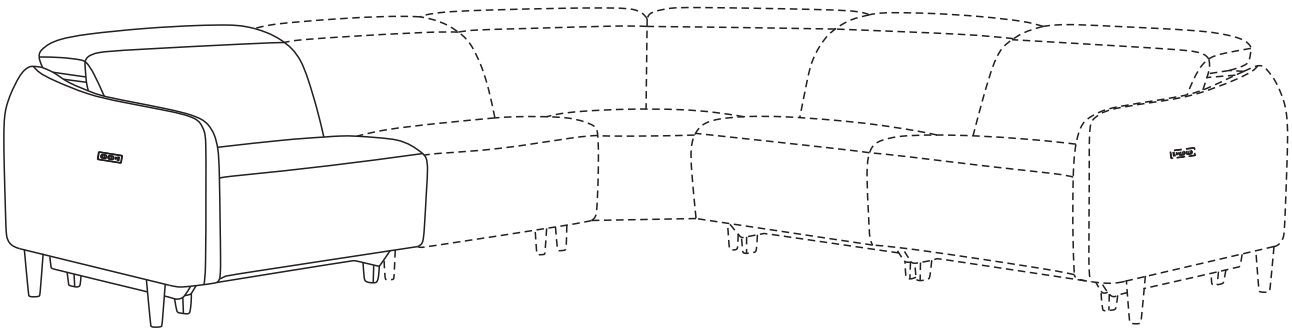

CAUTION THIS ASSEMBLY MANUAL CONTAINS IMPORTANT SAFETY INFORMATION. PLEASE READ AND KEEP FOR FUTURE REFERENCE.

Parts

A 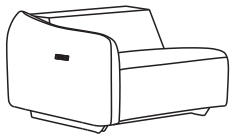 Power Left Chair	B 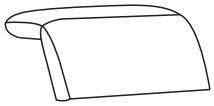 Backrest	C Wooden Leg x 2	D 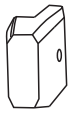 Plastic Leg x 4
E screw x 4	F 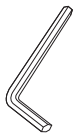 Hex Key x 1	G 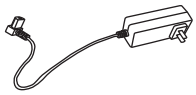 Power Cord	

Before you begin: Locate the Power Cord (G) and the Hardware Pack at the bottom of Power Left Chair.

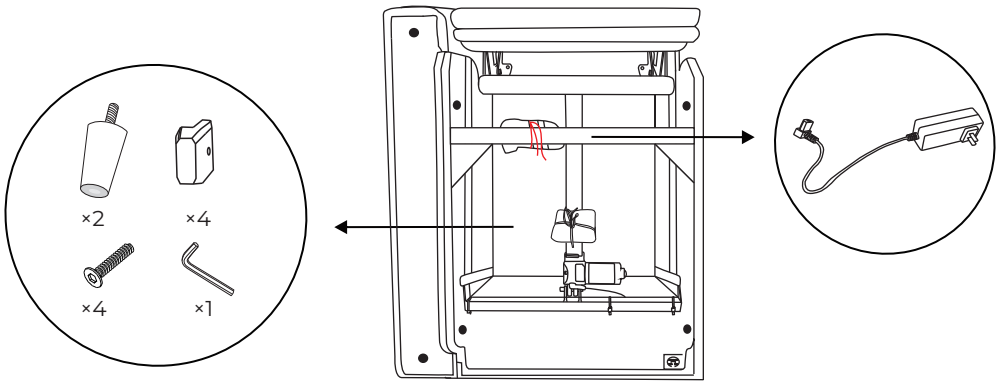

Step 1: Tip over the Power Left Chair, remove 4 Plastic legs (D) and 4 Hexagon Socket Screws (E). Align them with the holes as shown in the figure, then use the Hex Key to tighten the screws,then tighten the Wooden Legs (C) directly.

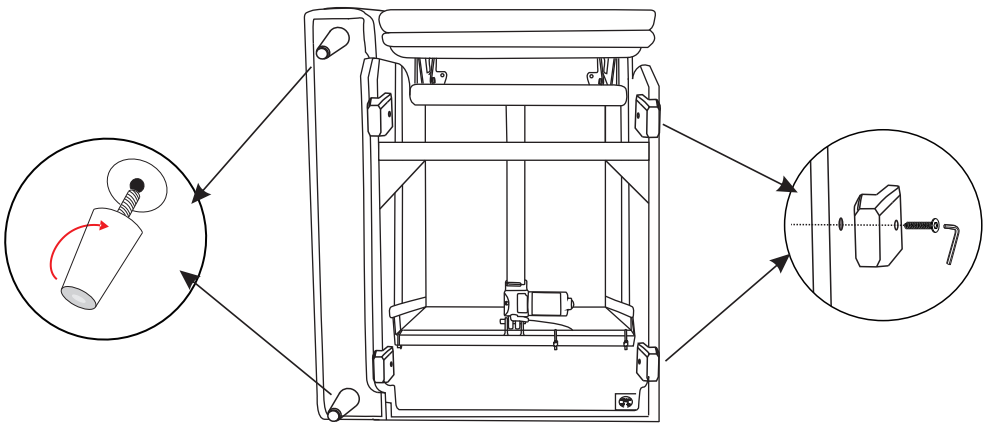

Step 2: Connect one end of the power cord into the DC adaptor located at the back corner of the seat. Plug the other end of power cord into the power outlet. Then press the “Headrest open” button on the remote until the headrest hinge mechanism is fully upright.

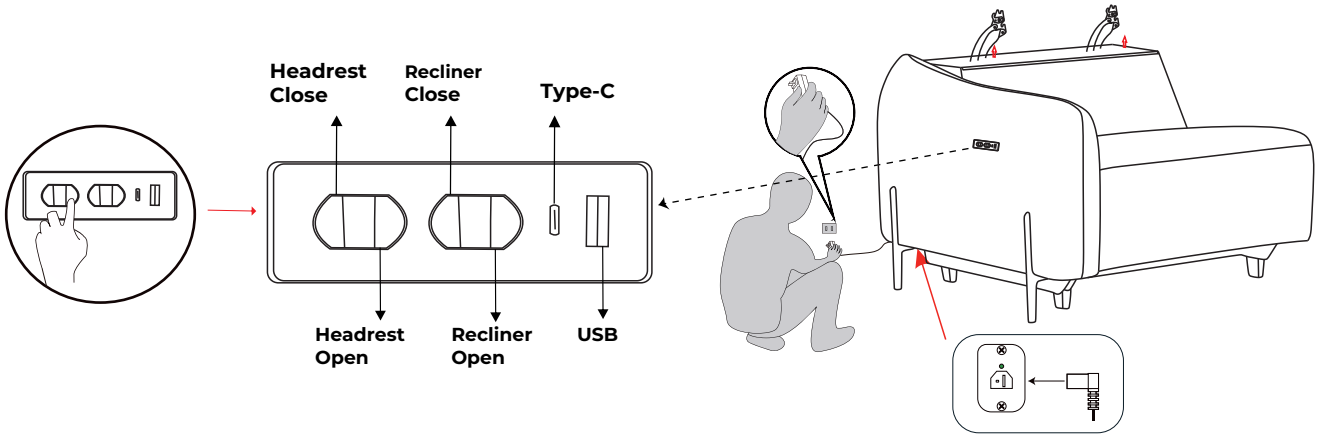

Step 3: As shown in the figure, attach the backrest Velcro firmly to the back frame, then zip up the zipper.

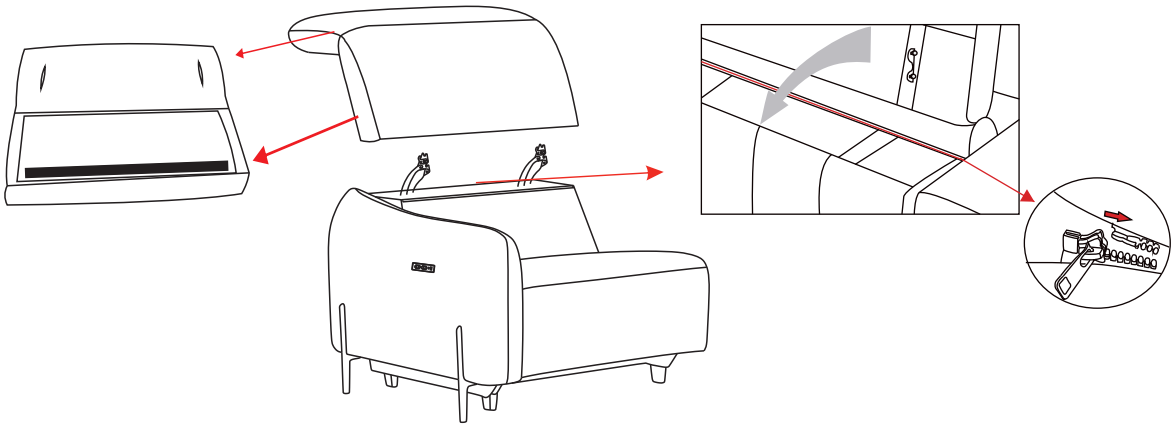

Step 4: Snap the metal part of the headrest into the raised hinge, ensuring it is firmly locked in place, as illustrated in the figure. Then fasten the hook-and-loop strips (Velcro®-type) located underneath the back cushion to the corresponding strips on the seat base.

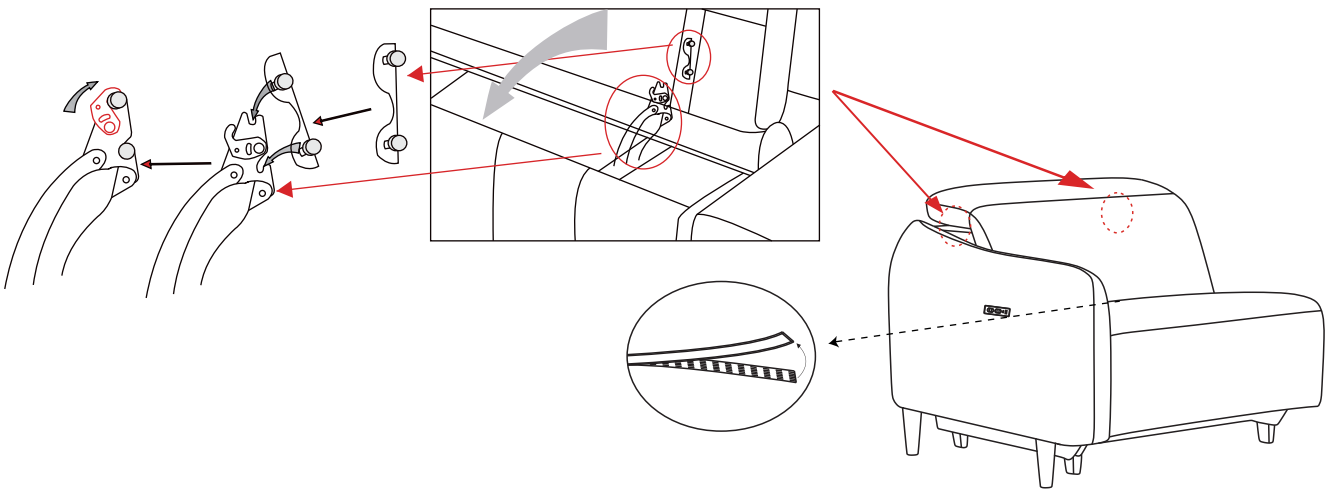

How to Connect

Step 1: Lift the side of the sofa with the protruding side brackets, insert it into the side slots on the opposite side, to lock them into place.

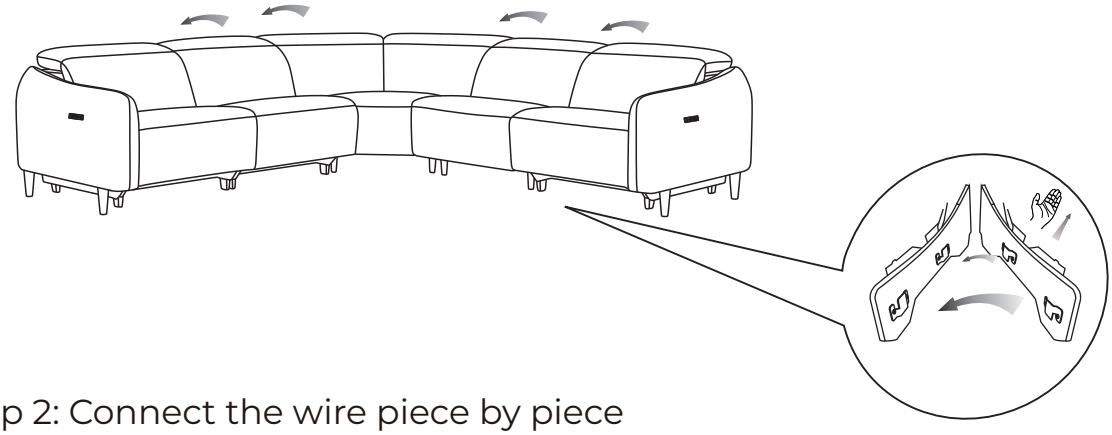

Step 2: Connect the wire piece by piece

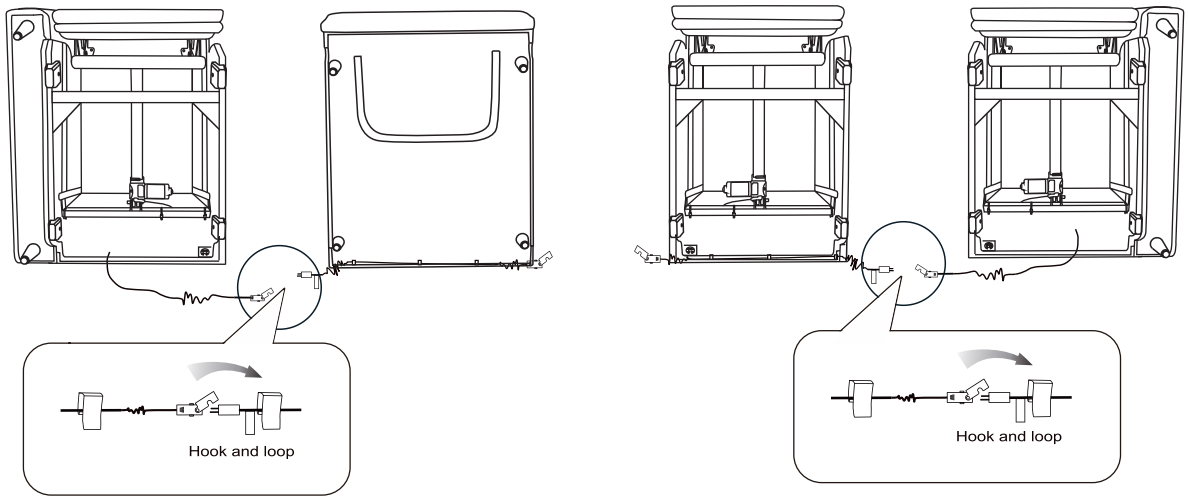

Step 3: Plug the power cord of either the left or right power armchair into the power outlet.
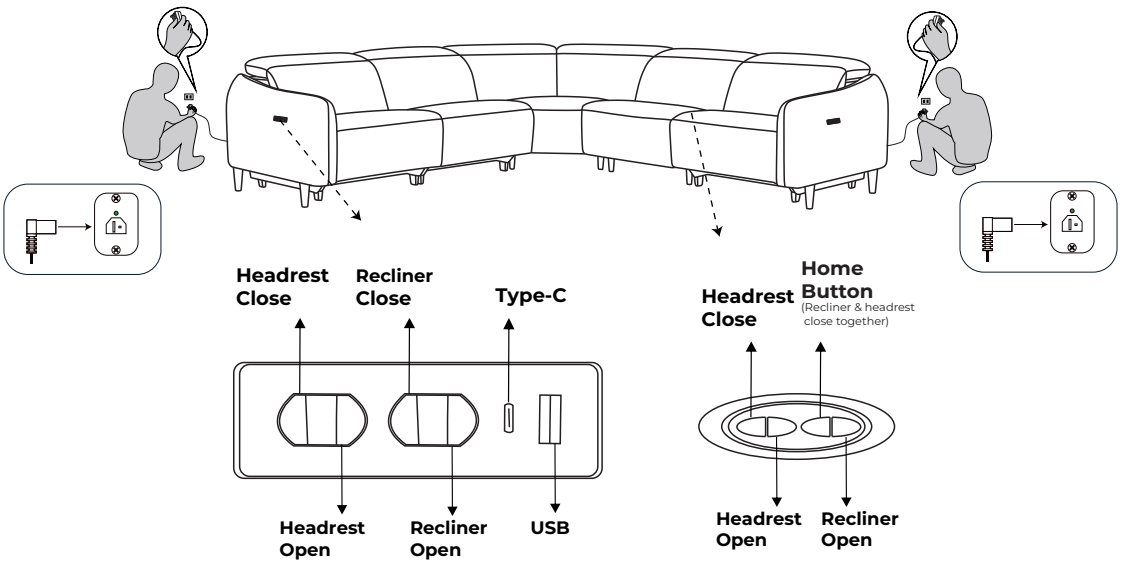
Note: After all the connections are made, the green LED will be lit up.