# PRODUCT DIMENSIONS

**GENERAL DIMENSIONS:**
WIDTH: 47.25”
DEPTH” 23.5”
HEIGHT: 41.5”
NET WEIGHT: 41.75 Lbs
SHIPS IN 1 BOX

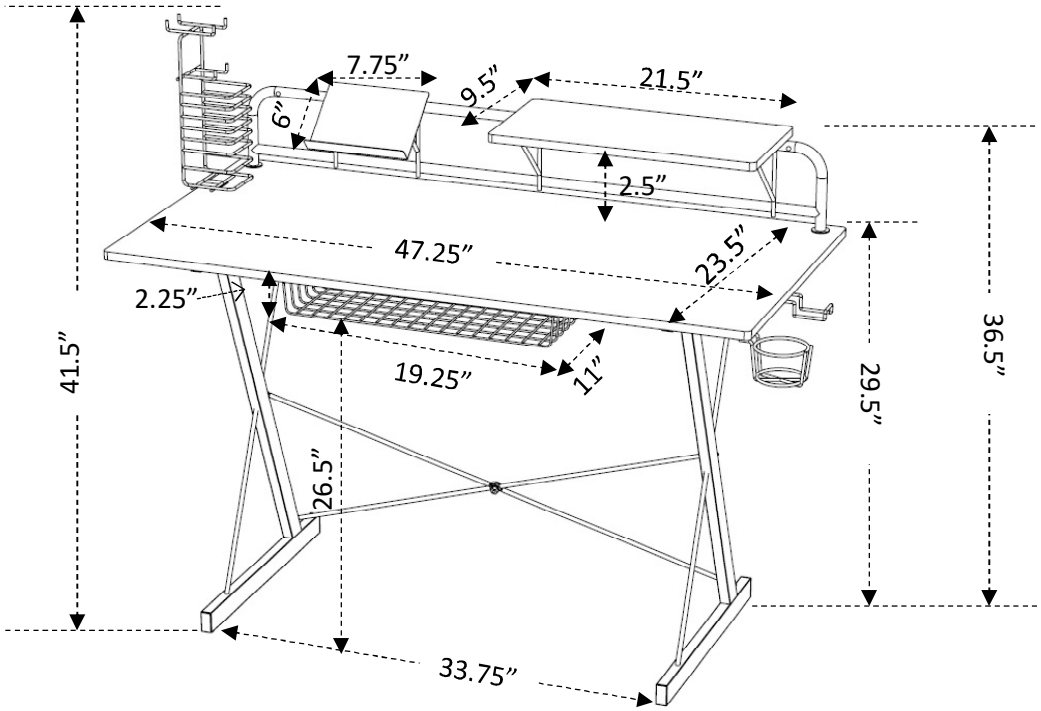

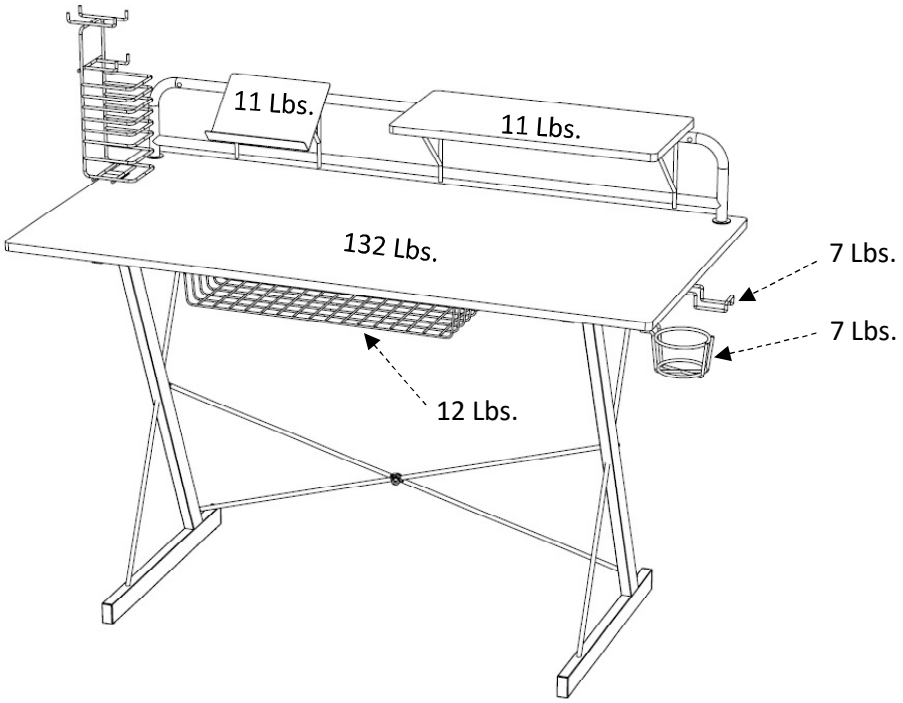
MAXIMUM WEIGHT CAPACITIES