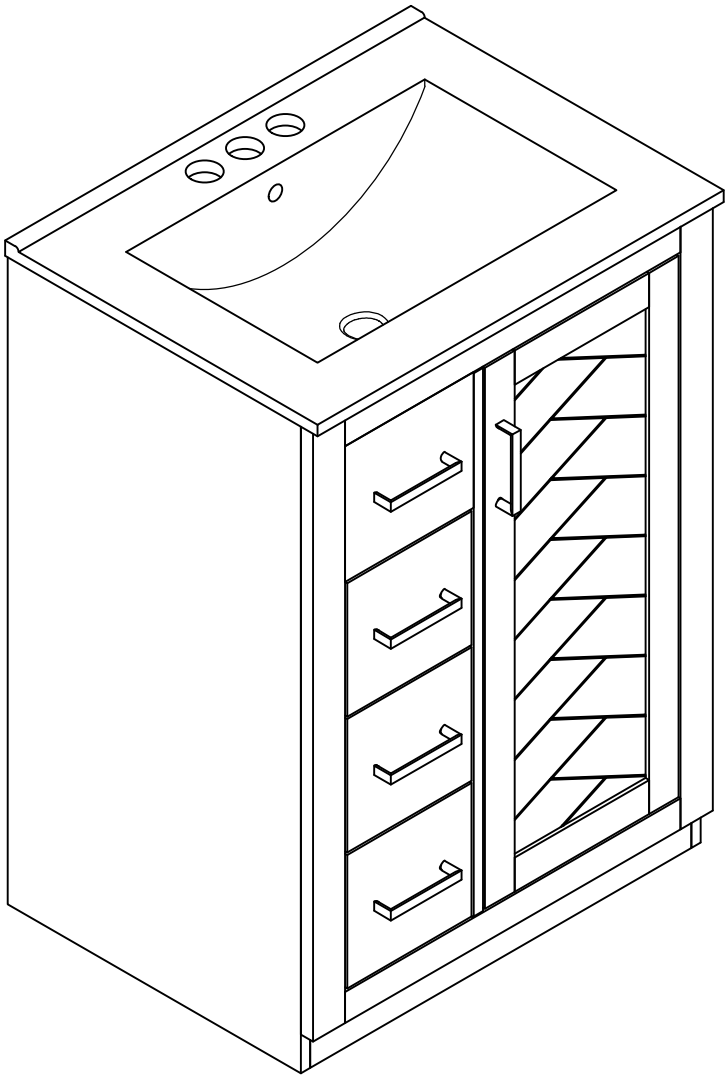
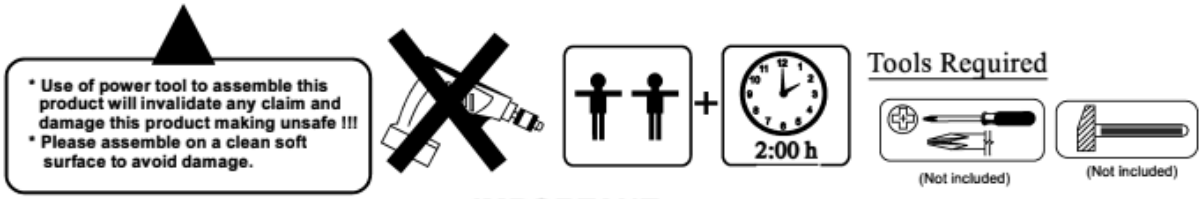
ASSEMBLY INSTRUCTIONS
24 INCH BATH VANITY (COMBO)

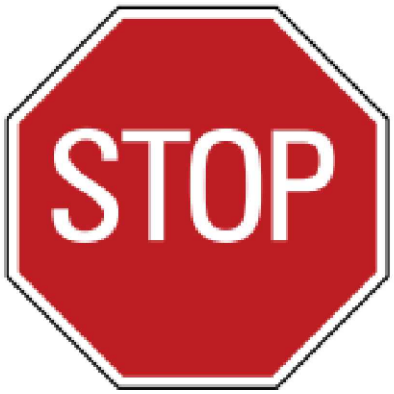


Thank you for purchasing this quality product. Be sure to check all packing material carefully for small parts which may have come loose inside the carton during shipment. Separate, identify and count all parts and hardware. Compare with the parts list to be sure all parts are present.
"DO NOT TIGHTEN SCREWS UNTIL COMPLETELY ASSEMBLED"



IMPORTANT:
PLEASE READ INSTRUCTION BEFORE STARTING THE ASSEMBLY

PLEASE DO NOT RETURN TO STORE



Please do not return this product to the retailer!!
We are able to assist you in ANY way

If you find that you have any trouble with assembly or missing or damaged parts please contact the seller.

Before Installation

Important - Please read these instructions fully before starting assembly

Thank you for purchasing this quality product. Be sure to check all packing materials carefully for small parts, which may have come loose inside the carton during shipment. Identify and count all items according to the PARTS LIST and/or HARDWARE LIST shown below. Check you have all the components and tools listed on the following pages.

. We recommend that you assemble this product with the assistance of another person; this will make the assembly easier, and will help eliminate damage to the product or injury to persons during assembly.

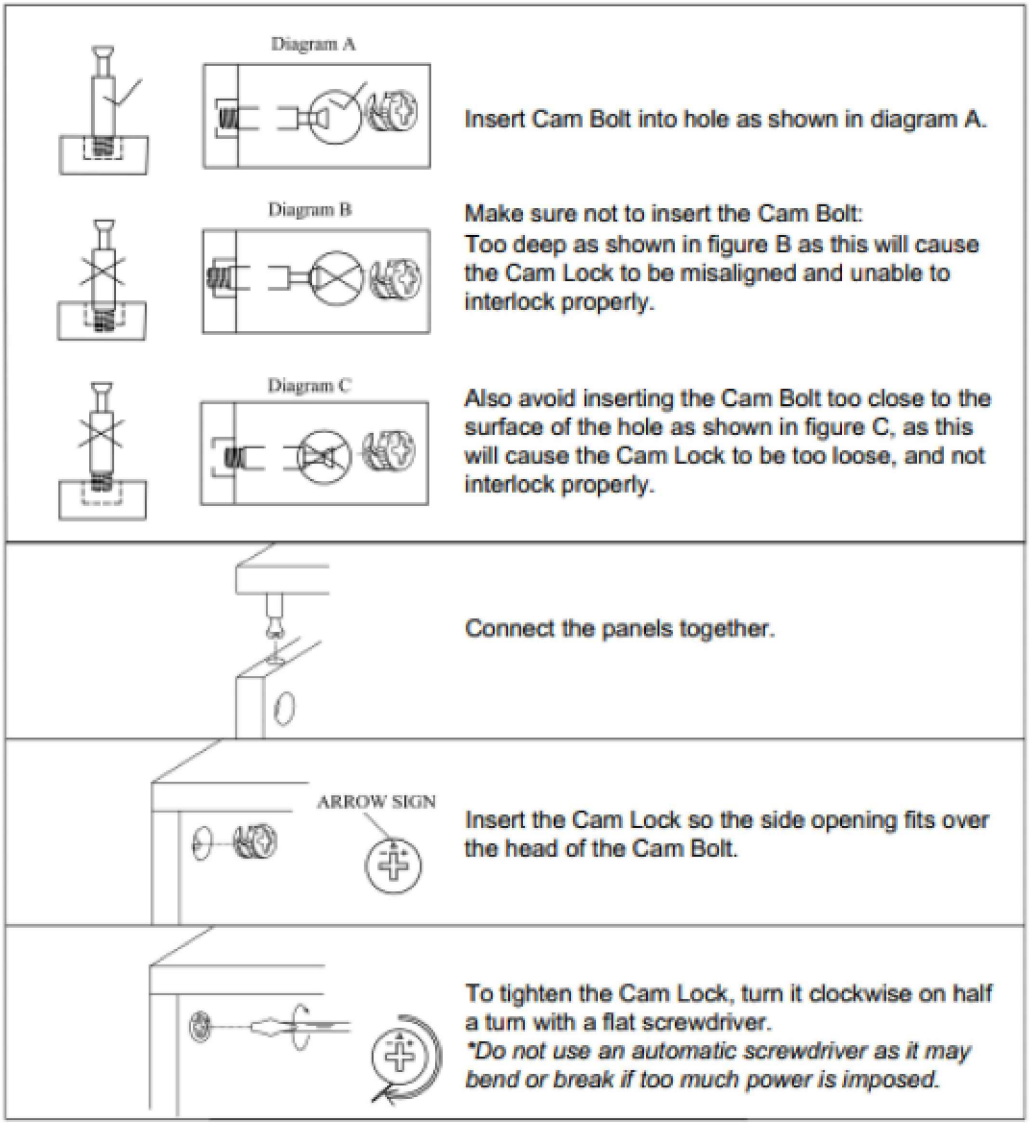
. Please do not over tighten screws or bolts until the assembly is completed.

. Keep children and animal away from the work area, small parts could choke if swallowed.

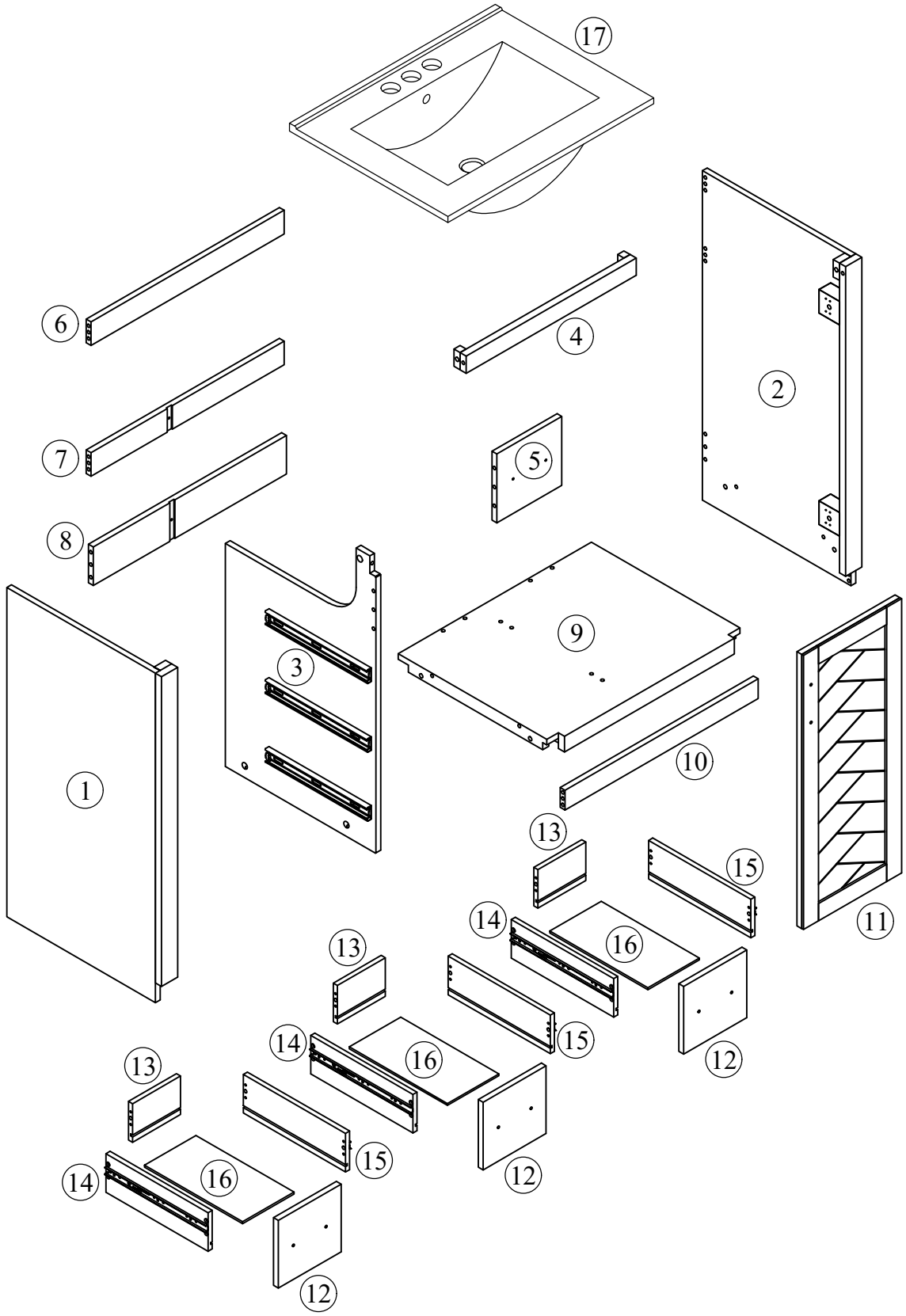
. Please put all parts on a non-abrasive floor before assembly,and follow the assembly steps to assemble your newly purchased product correctly and efficently.

If you find that you have any trouble with assembly or missing or damaged parts please contact the seller.

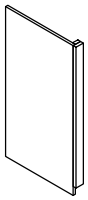
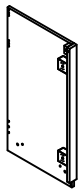
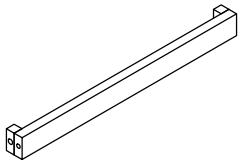
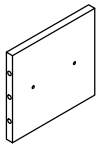
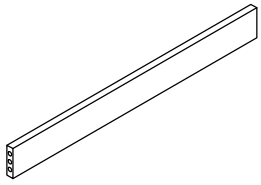
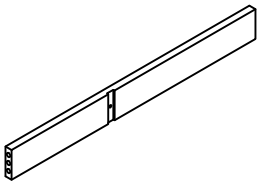
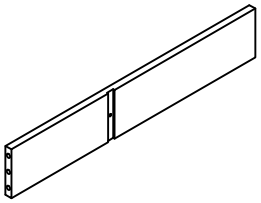
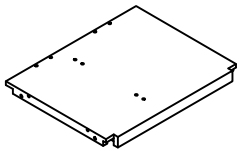
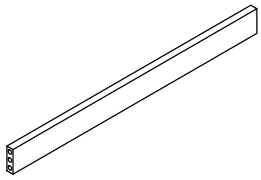
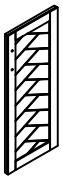
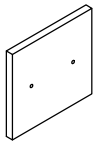
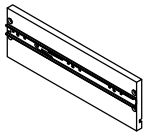
Cam Lock Assembly Instructions



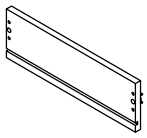
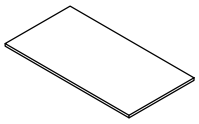
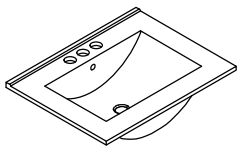
Detail View - VANITY



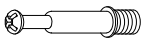
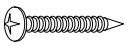
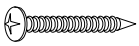
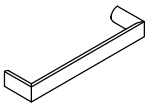
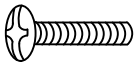
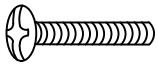
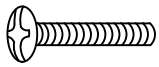
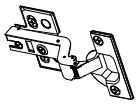
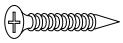
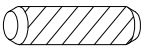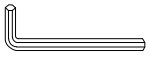
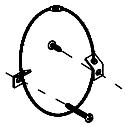
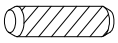
Part List

1  Side Panel (L) - 1pc	2  Side Panel (R) - 1pc
3  Mid Panel - 1pc	4  Top Bar Front - 1pc
5  Top Front Panel - 1pc	6  Top Rear Panel - 1pc
7  Mid Rear Panel - 1pc	8  Bottom Rear Panel - 1pc
9  Bottom Frame - 1pc	10  Bottom Bar Front - 1pc
11  Cabinet Door - 1pc	12  Drawer Face - 3pcs
13  Drawer Back Panel - 3pcs	14  Drawer Side Panel (L) - 3pcs

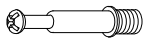
Part List

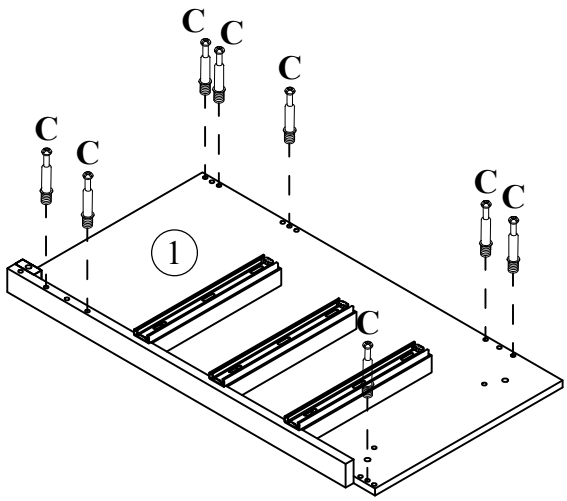
15  Drawer Side Panel (R) - 3pcs	16  Bottom Drawer Panel - 3pcs
17  Sink - 1pc	

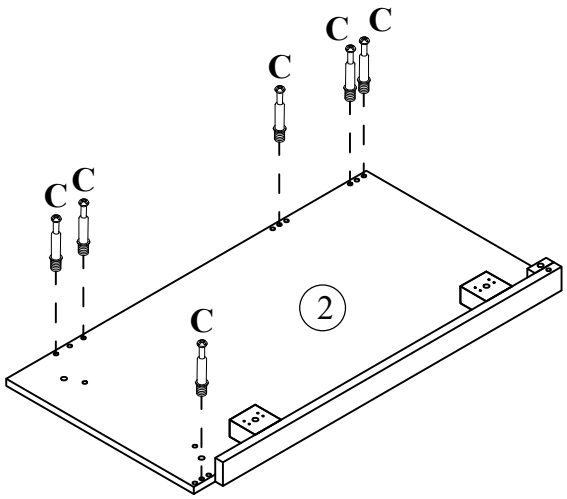
Hardware List

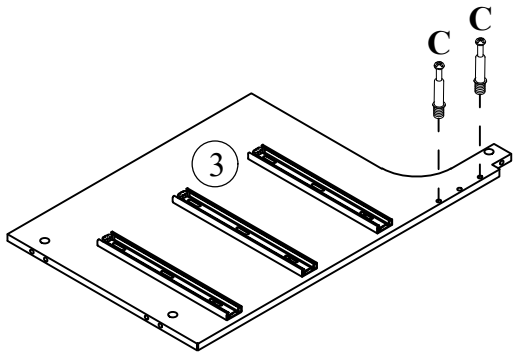
A  ø13x1/4"x28mm	B  ø1/4"x16x1mm	C  ø6x35mm
Hex-Head bolts (6pcs)	Washer (6pcs)	Three in one bolts (21pcs)
D  ø14.5x12mm	E  ø8xø4x25mm	F  ø8xø4x32mm
Three in one lock (21pcs)	Round head screw (2pcs)	Round head screw (24pcs)
G 	H  ø5/32"x25mm	I  ø5/32"x20mm
Handle (5pcs)	Handle screw (2pcs)	Handle screw (2pcs)
J  ø5/32"x32mm	K 	L  ø7xø3.5x15mm
Handle screw (6pcs)	Damping hinge (2pcs)	Flat head screw (12pcs)
M  ø8x30mm	N  4mm	O 
Wood dowel (24pcs)	Allen key (1pc)	Anti fall hardware (2sets)
P  ø6x30mm		
Wood dowel (12pcs)		

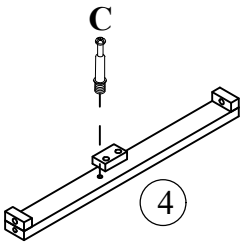
STEP: 1

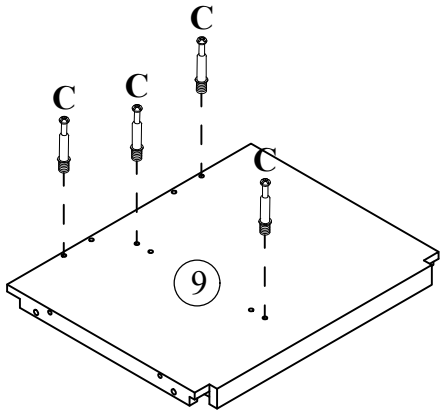
C	
	
21PCS	

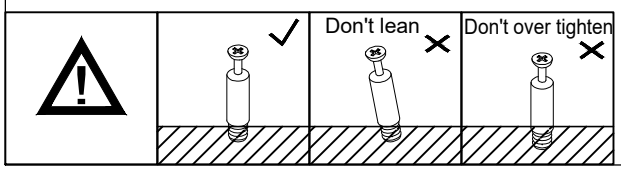






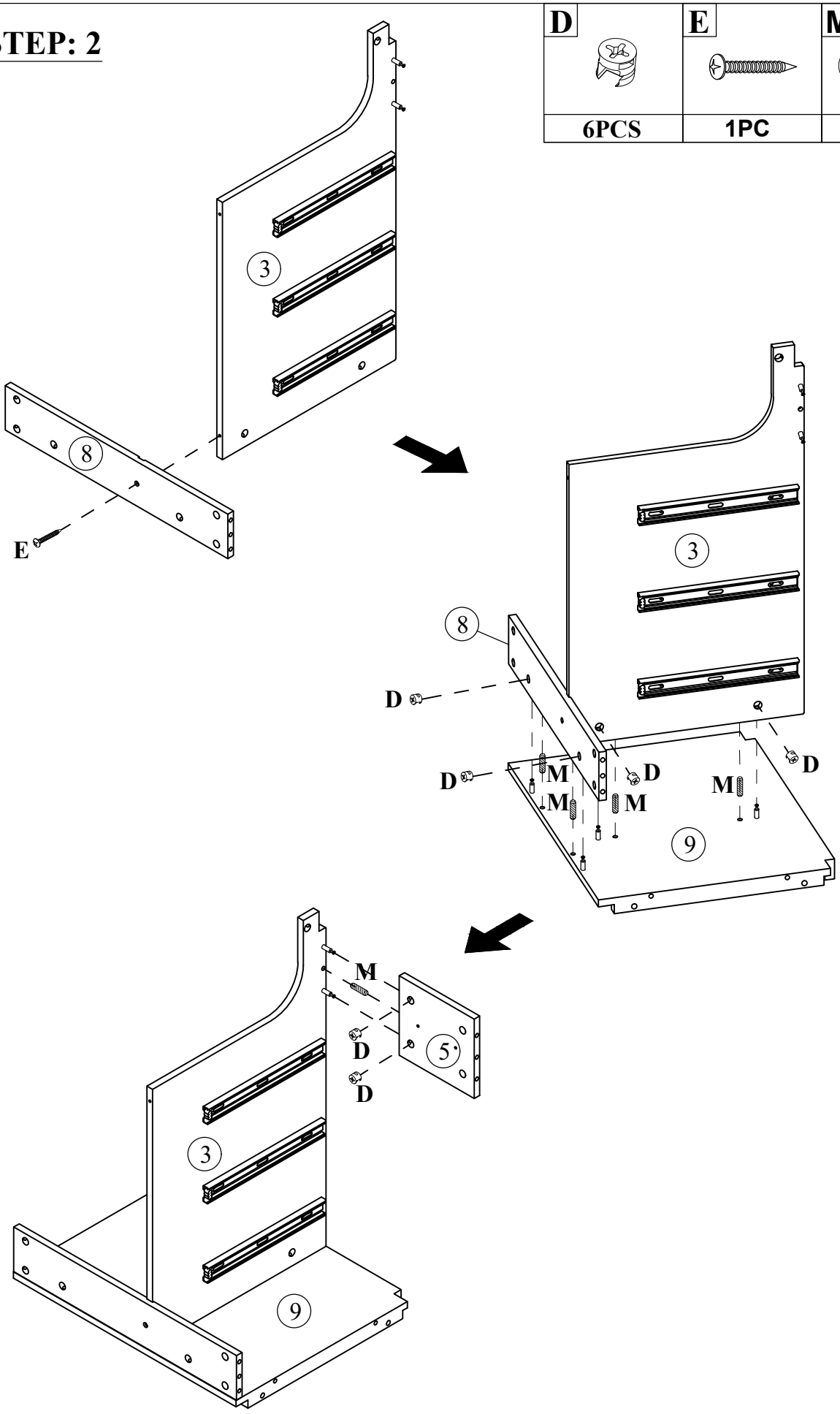






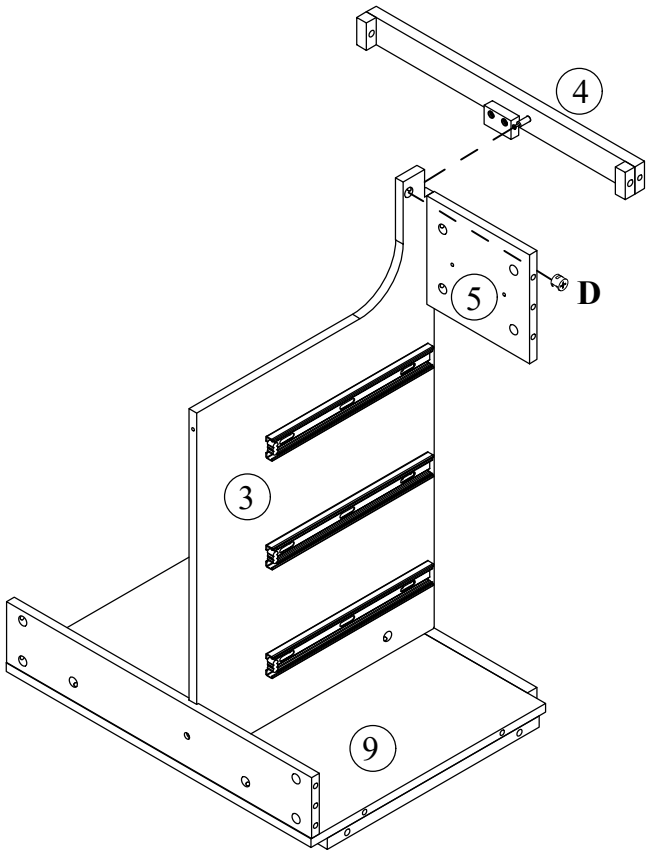
STEP: 2

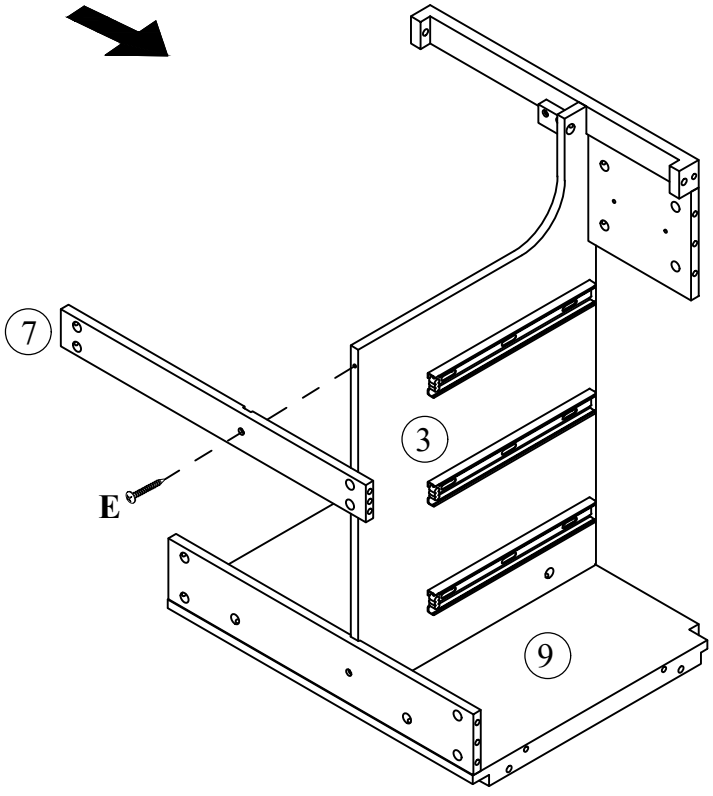
D	E	M
6PCS	1PC	5PCS



STEP: 3

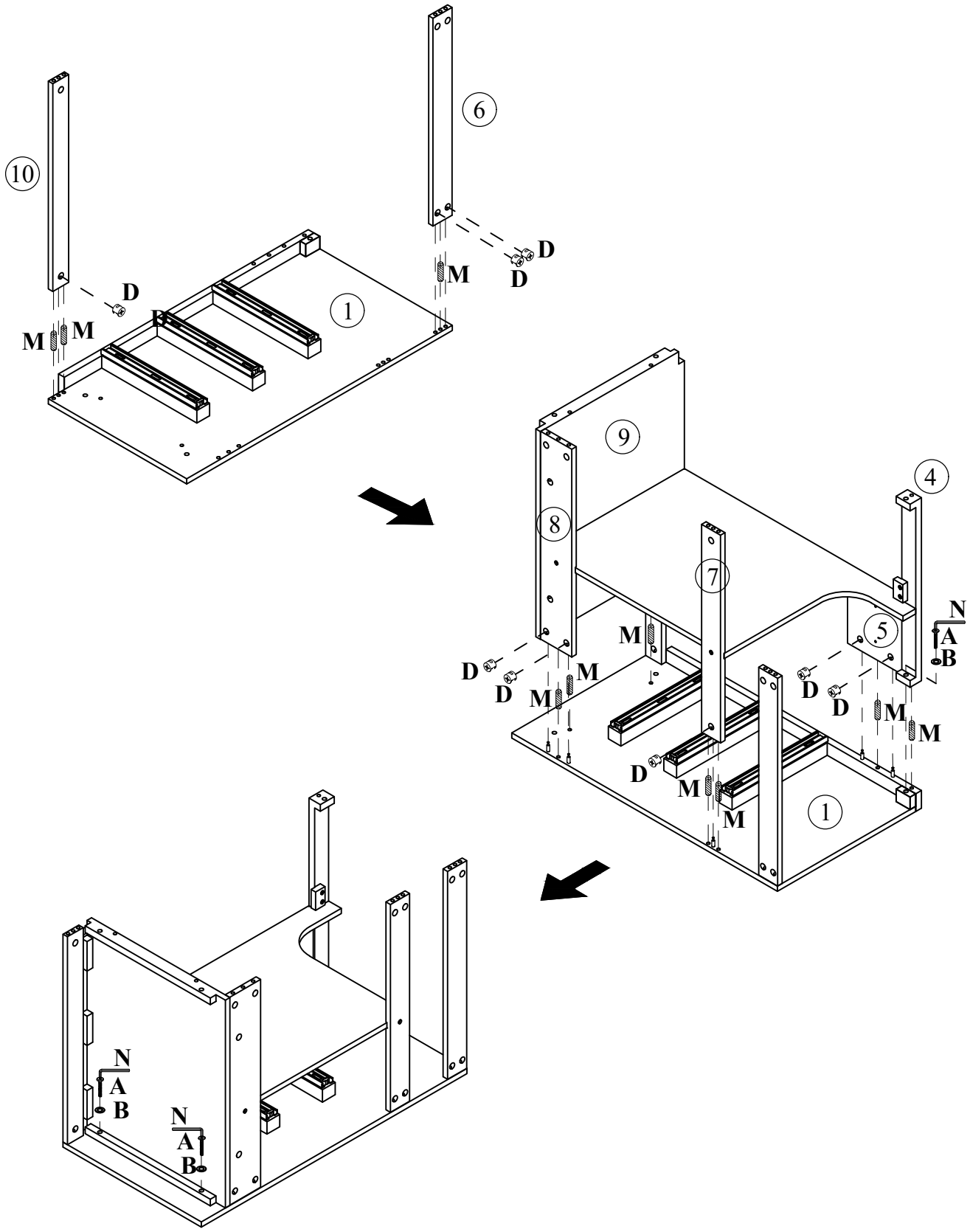
D	E
	
1PC	1PC





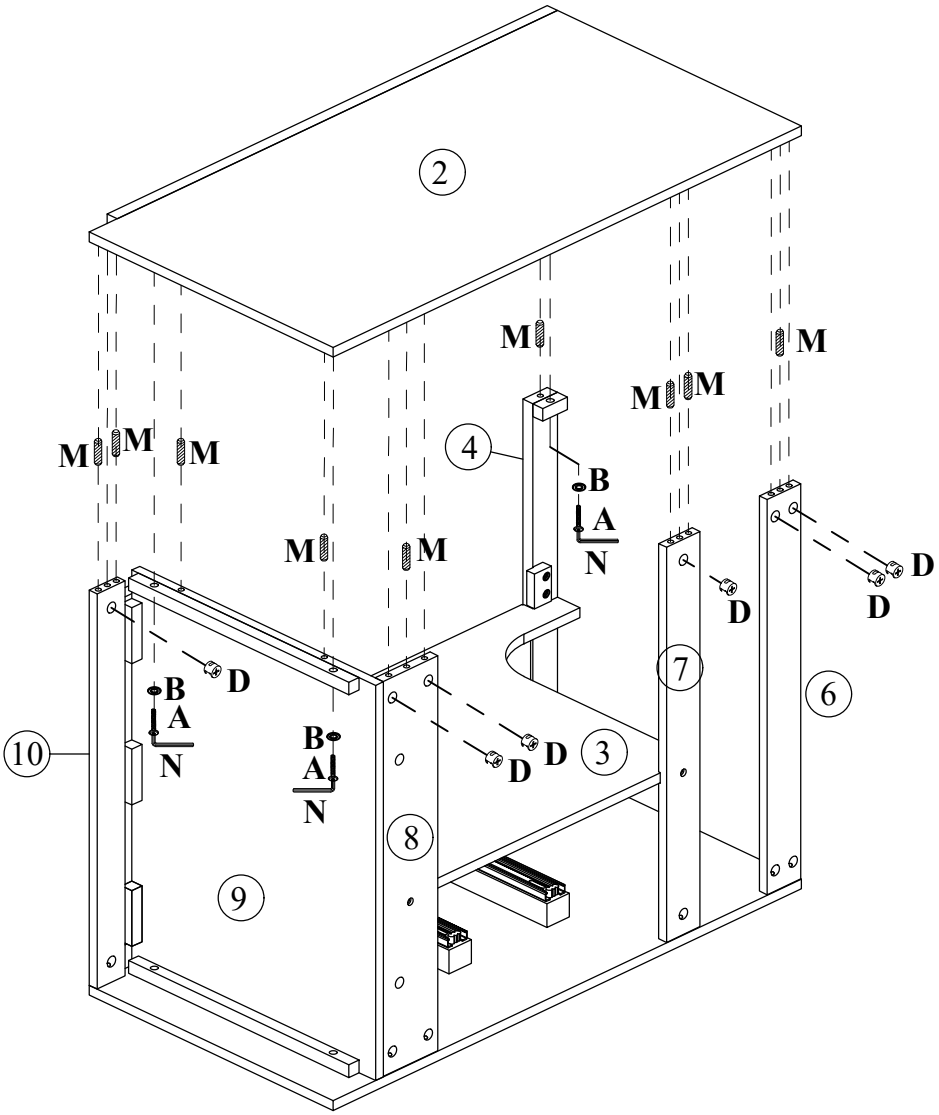
STEP: 4

A	B	D	M	N
3PCS	3PCS	8PCS	10PCS	1PC

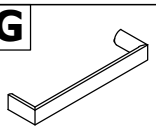
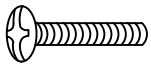


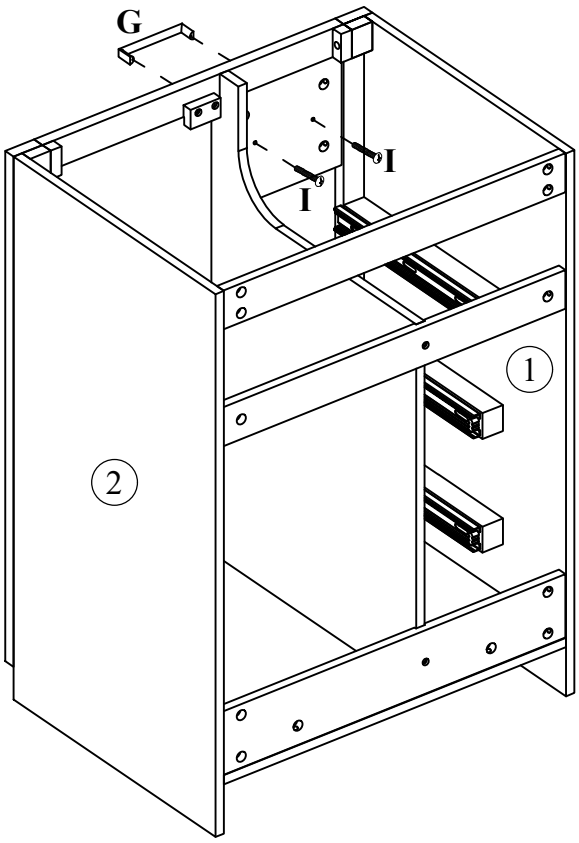
STEP: 5

A	B	D	M	N
3PCS	3PCS	6PCS	9PCS	1PC



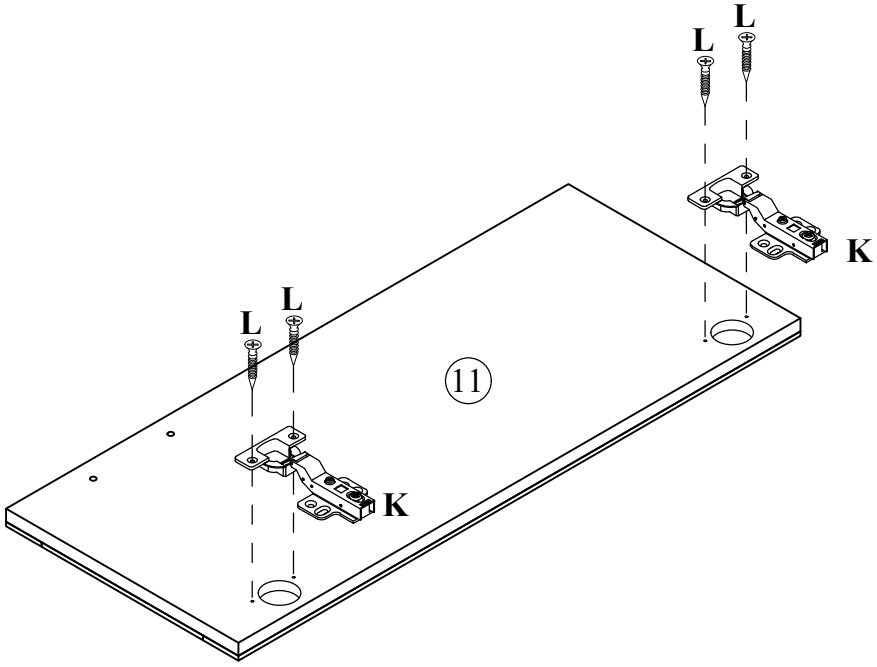
STEP: 6

G	I
	
1PC	2PCS

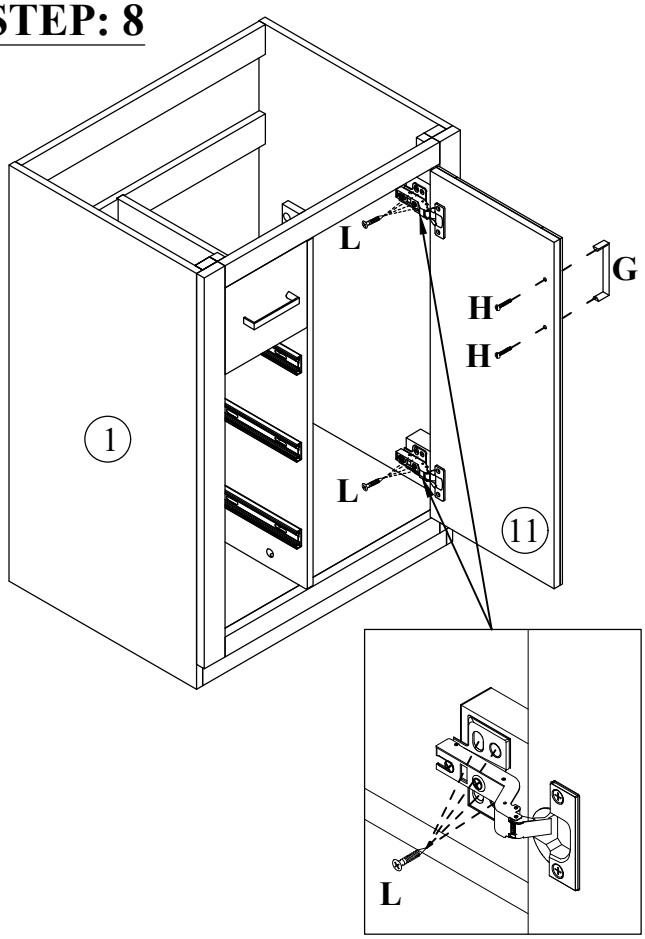


STEP: 7

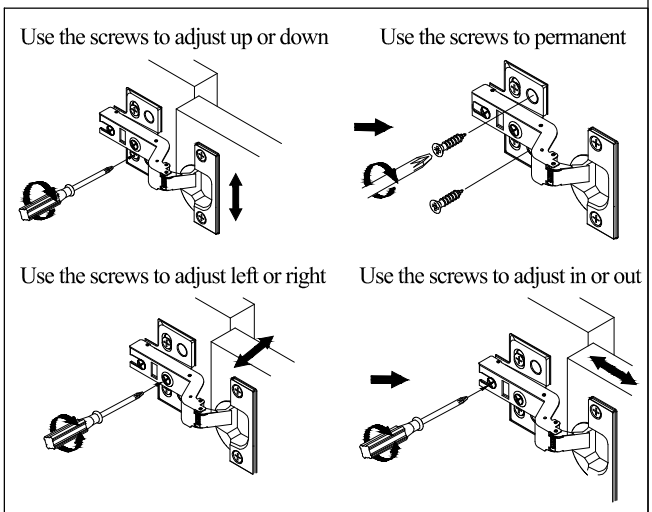
K	L
	
2PCS	4PCS



STEP: 8

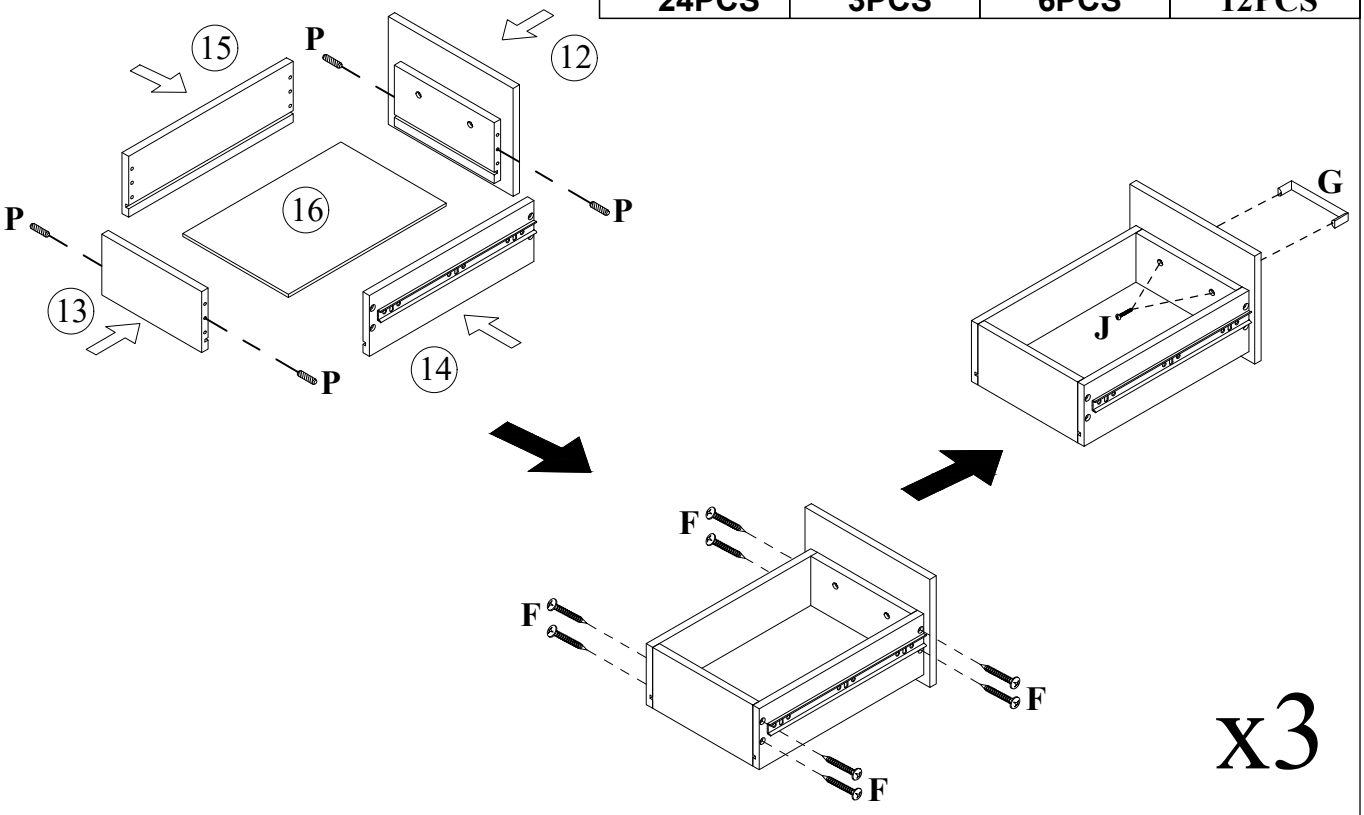


G	H	L
1PC	2PCS	8PCS

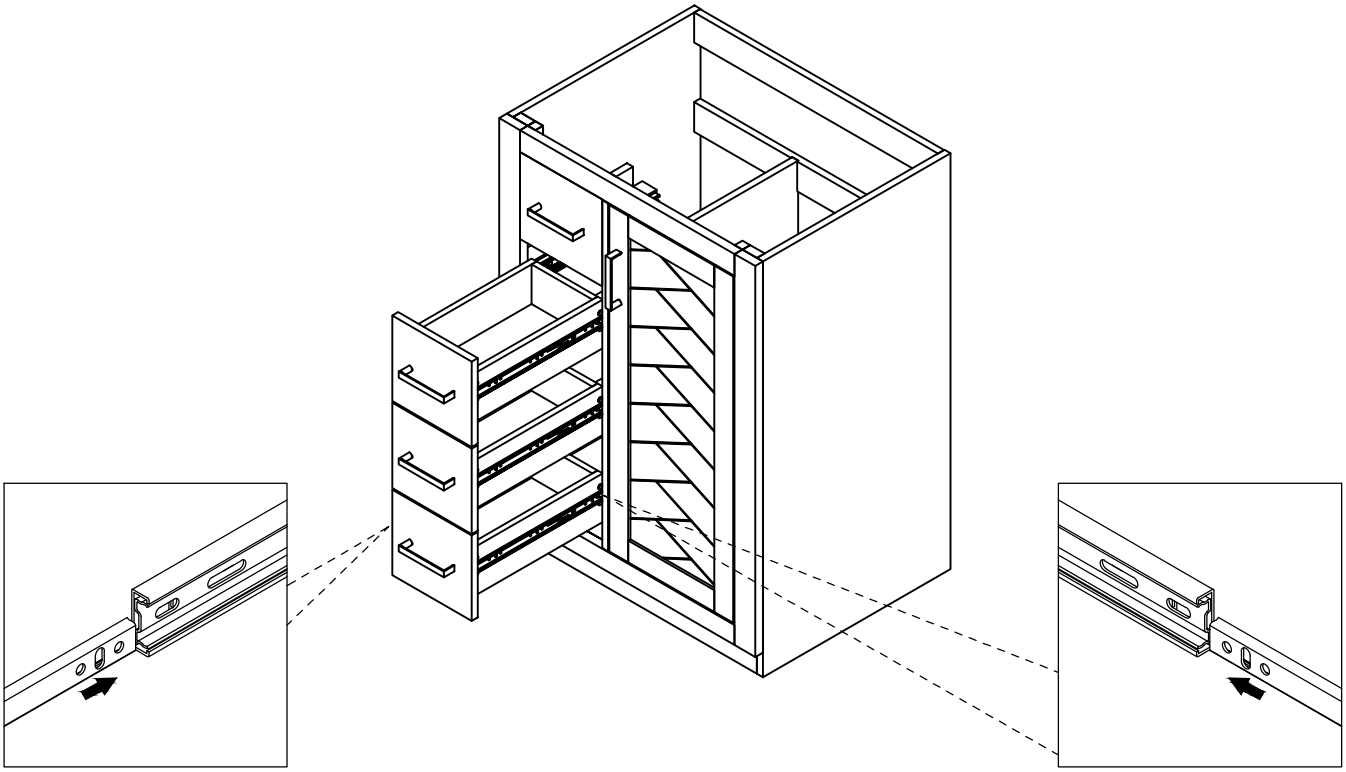


STEP: 9

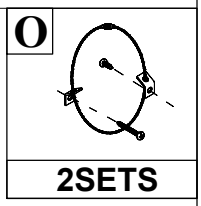
F	G	J	P
24PCS	3PCS	6PCS	12PCS

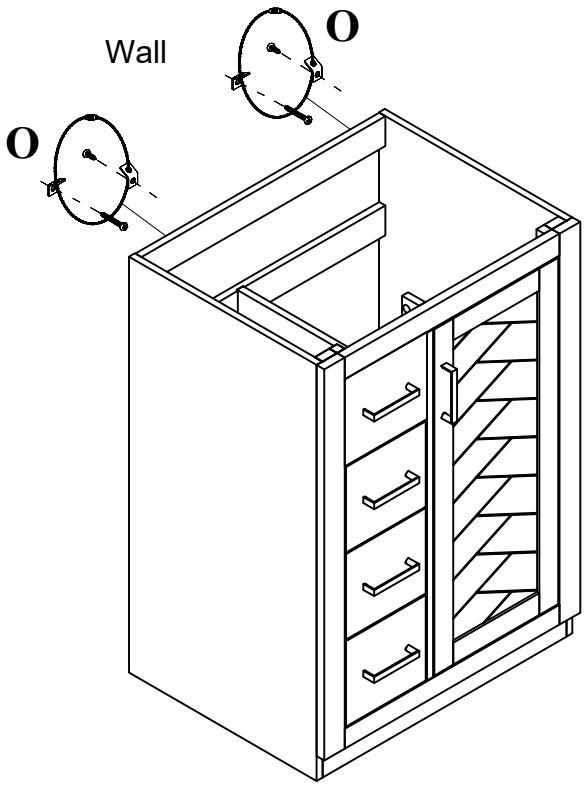


STEP: 10



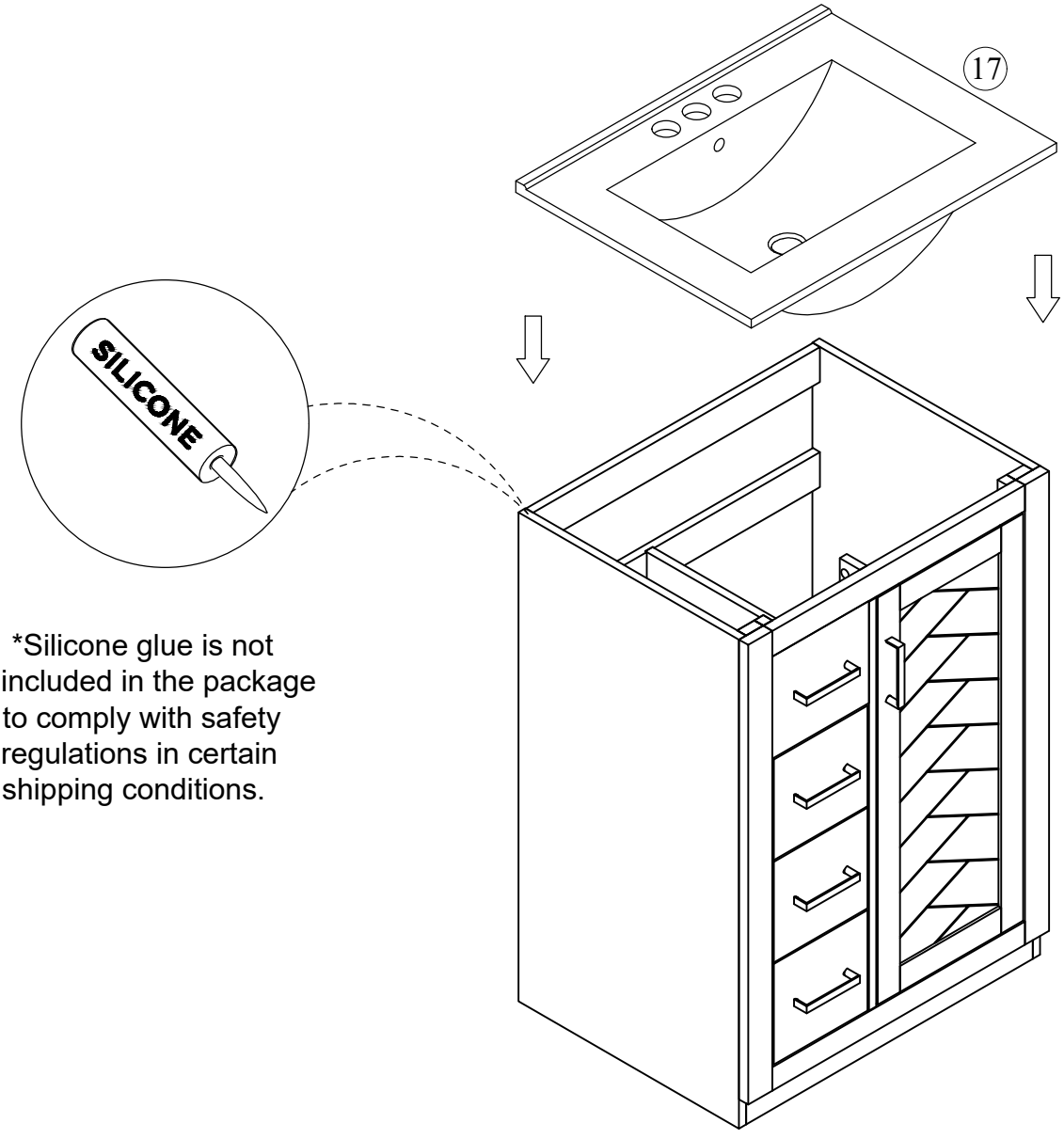
STEP: 11





STEP: 12

Install the sink on the cabinet with glue.
Let stand for 24 hours



*Silicone glue is not included in the package to comply with safety regulations in certain shipping conditions.

STEP: 13

