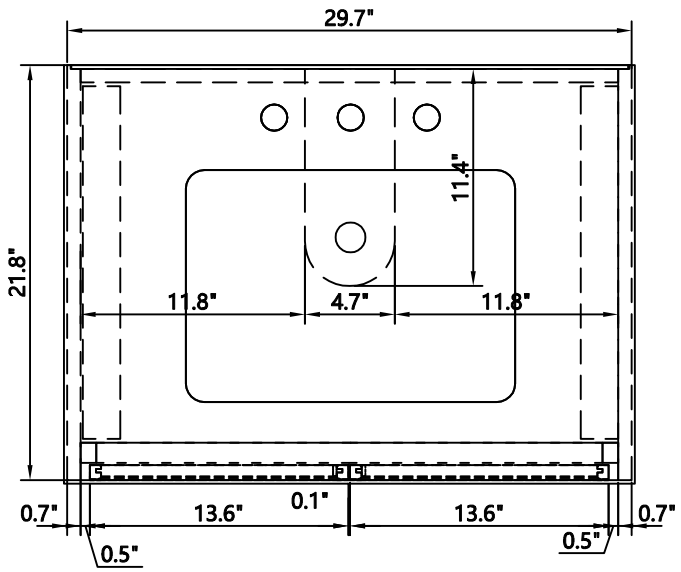
29.7"
21.8"
11.4"
11.8"
4.7"
11.8"
0.7"
13.6"
0.1"
13.6"
0.7"
0.5"
0.5"

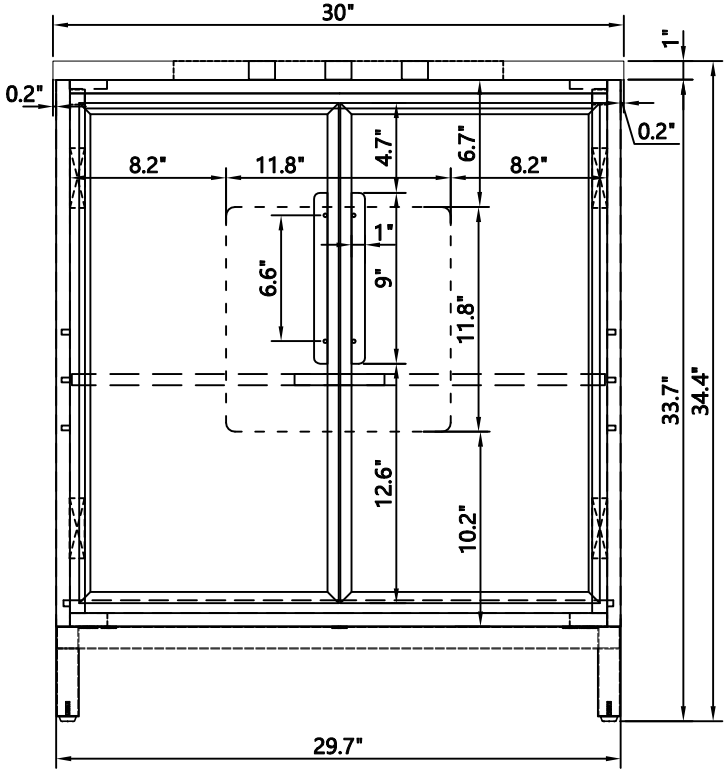
30"
1"
0.2"
0.2"
8.2"
11.8"
4.7"
6.7"
8.2"
1"
6.6"
9"
11.8"
12.6"
10.2"
33.7"
34.4"
29.7"

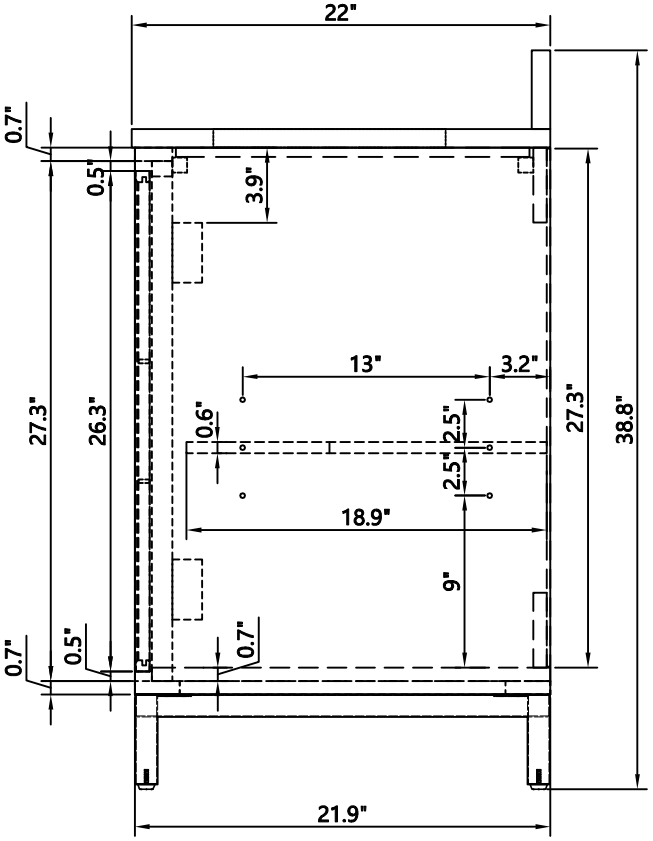
22"
0.7"
0.5"
3.9"
13"
3.2"
27.3"
26.3"
0.6"
2.5"
2.5"
27.3"
38.8"
18.9"
9"
0.7"
0.5"
0.7"
21.9"

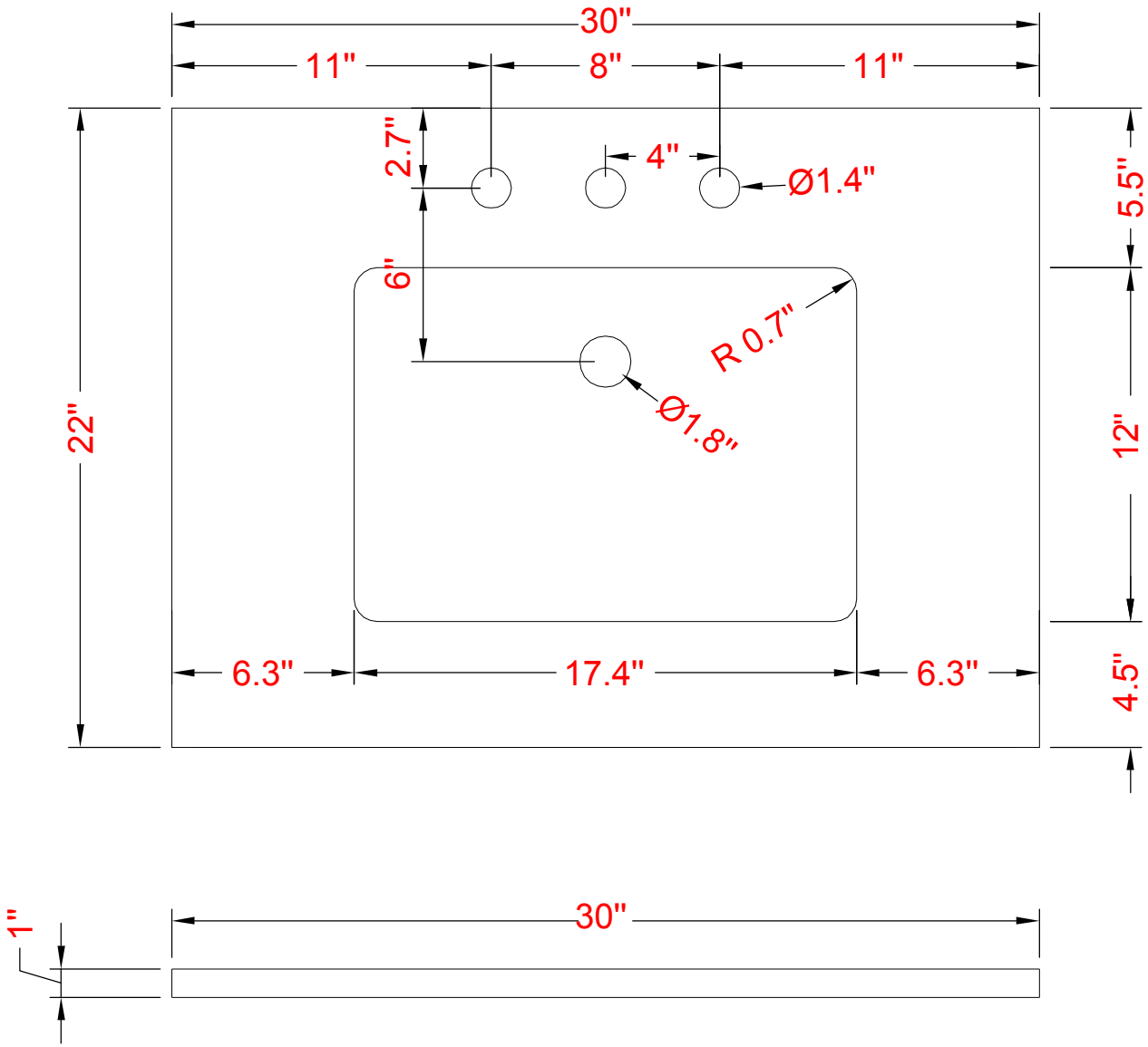
30"
11"
8"
11"
2.7"
4"
Ø1.4"
5.5"
6"
R 0.7"
Ø1.8"
22"
12"
6.3"
17.4"
6.3"
4.5"
1"
30"

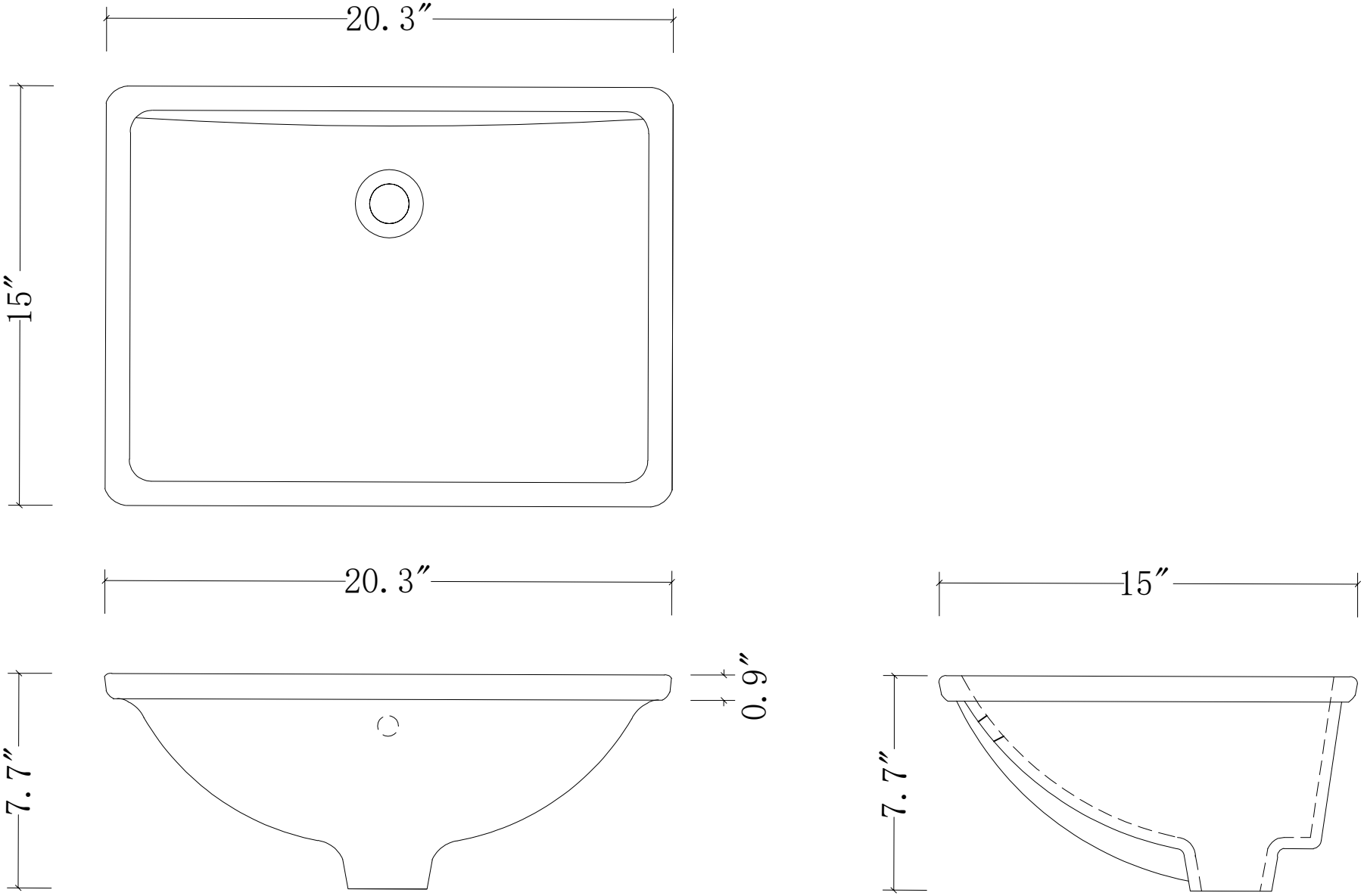
20.3″
15″
20.3″
0.9″
7.7″
15″
7.7″

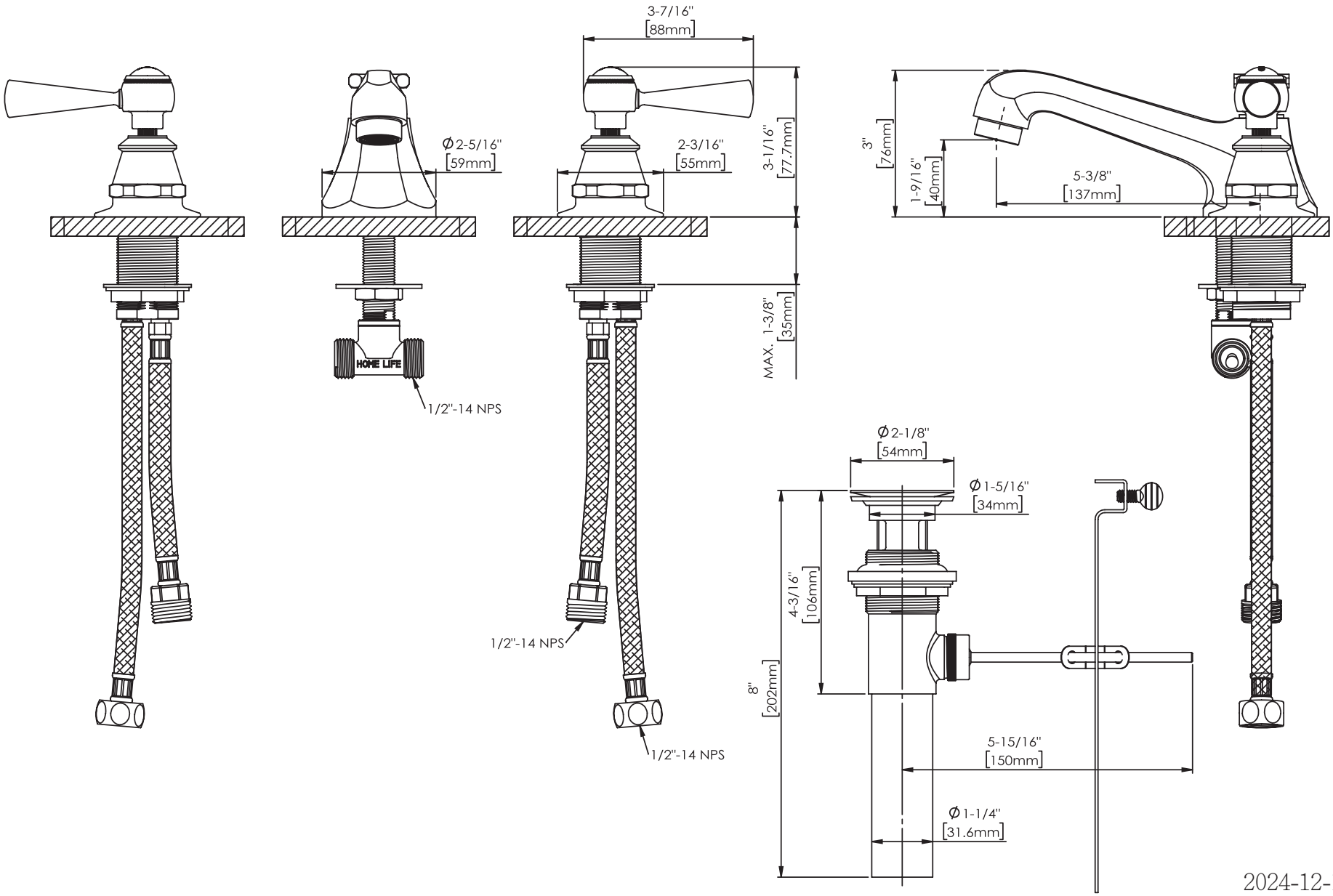
3-7/16"
[88mm]
Ø2-5/16"
[59mm]
2-3/16"
[55mm]
3-1/16"
[77.7mm]
MAX. 1-3/8"
[35mm]
3"
[76mm]
1-9/16"
[40mm]
5-3/8"
[137mm]
HOME LIFE
1/2"-14 NPS
1/2"-14 NPS
1/2"-14 NPS
Ø2-1/8"
[54mm]
Ø1-5/16"
[34mm]
4-3/16"
[106mm]
8"
[202mm]
5-15/16"
[150mm]
Ø1-1/4"
[31.6mm]

2024-12-19