ASSEMBLY INSTRUCTIONS

# The Madison/Sturbridge/Trinity/Burton Lamp Post

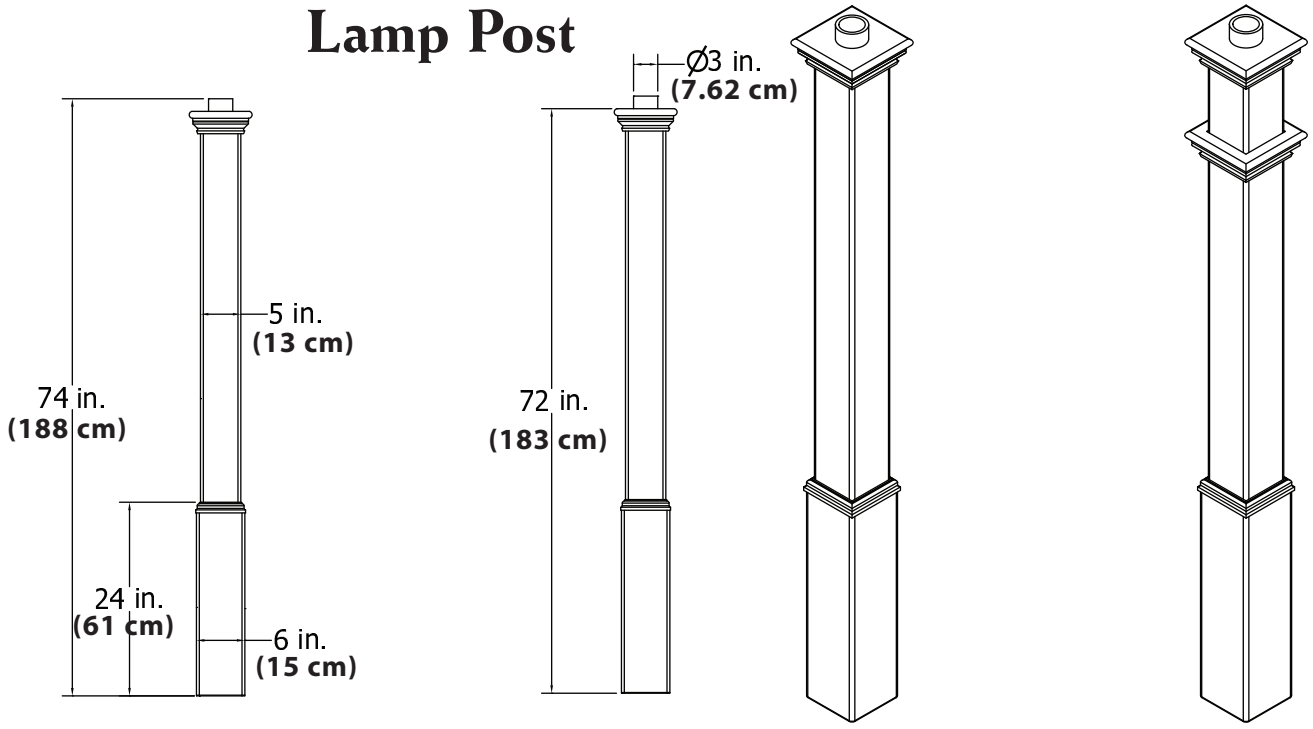


*Please read through before starting assembly.*

*Madison/Trinity Lamp Post* *Sturbridge/Burton Lamp Post*

## Check Boxes for These Contents (1 Box)

In the event of missing or defective parts please call our customer service dept. at **1 800 282 9346** *(Mon. to Fri. 8:00 AM to 5:00 PM EST)*.

1. Lamp PostTop *(1)* - *5" x 5"x 58" (12.7 x 12.7 x 147.3 cm) - 10890 White , 14053 Brown*
2. Post Coupler *(1)* - *10906 White, 14052 Brown*
3. Lamp Post Bottom *(1)* - *5" x 5"x 14" (12.7 x 12.7 x 35.5 cm) - 10889 White, 14054 Brown*
4. Post Cap *(1)* - *10789 White, 14051 Brown*
5. Base MoldingTrim Cap *(1)* - *10764 White, 14055 Brown*
6. Base Molding Post *(1)* - *10174-1 White, 14058 Brown*
7. Base Molding Bottom Insert *(1)* - *10765 White, 14057 Brown*
8. 1-1/2"Self-TappingScrews *(4)* - *20005 White, 20031 Brown*
9. VinylWeld Glue *(1)* - *20000 White, 20038 Brown*
10. PostTrim *(1)* - *Included with the Sturbridge/Burton Lamp Post Only* - *10698-1 White, 14029 Brown*

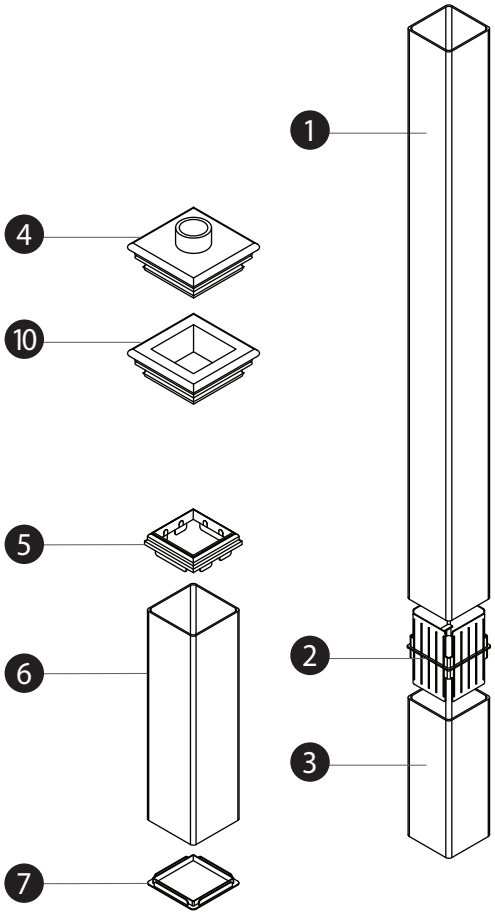

*Not to Scale*

## Tools You Will Need

- Wheelbarrow or bucket (to mix concrete)
- Tape Measure
- Level
- Shovel

## Purchased Separately

- Lamp.
- 4x4 Pressure treated lumber. - 8' (2.4 m) long
- Two bags of pre-mix concrete. *
  - * Strongly recommended for the stability of this product.

## General Information

- ***Read Instructions through carefully before beginning assembly.***
- When handling components, place on a non-abrasive surface *(i.e. shipping box)* to avoid scratching.
- We recommend an area approx 10'x 8' (3m x 2.4m) for unobstructed handling.

## Important Note:

- Please refer to local codes before installing outdoor lighting. UF-rated cable should be used for underground wiring and all materials should be approved by the Underwriter's Laborator (UL). Vita assumes no liability for errors, ommissions or the outcome of any project.

## STEP ONE

### *Base Molding Assembly*

Apply a generous amount of vinyl glue to the underside of the base molding and the top side of the base molding bottom insert and attach to the base molding post as shown aside.

## STEP TWO

### *Lamp Post Assembly*

A

Apply a generous amount of vinyl glue to the ribbed surface of the post coupler as shown and join the two posts as illustrated.
Slide the base molding over the lamp post. If you purchased the Madison/ Trinity Lamp Post, proceed to step three. If assembling the Sturbridge/ Burton Lamp post continue to step B.

B

Slide the post collar down measuring 12 inches from the top of the post. Once desired height is achived, make a note of the position of the collar.

C

Slide the collar **UP** and out of the way, then apply a generous amount of vinyl glue at the top of where the collar would sit.

D

Slide the collar back down to its desired height and allow some time for the vinyl glue to set and cure.

## STEP THREE

Apply a generous amount of vinyl glue to the inside base of the post cap and place over the top end of the lamp post as illustrated.

## STEP FOUR

### *Wood Post Installation*

Dig 36 in. (91.5 cm) deep hole in the desired location. Verify the depth of the hole to ensure that the 4x4 wood post will be buried 36 in. (91.5 cm) into the ground. Fill the hole 3/4 full with pre-mix concrete (not included). Insert the post into the concrete and check for level. Allow time for the concrete to set, then fill in the remainder of the hole.

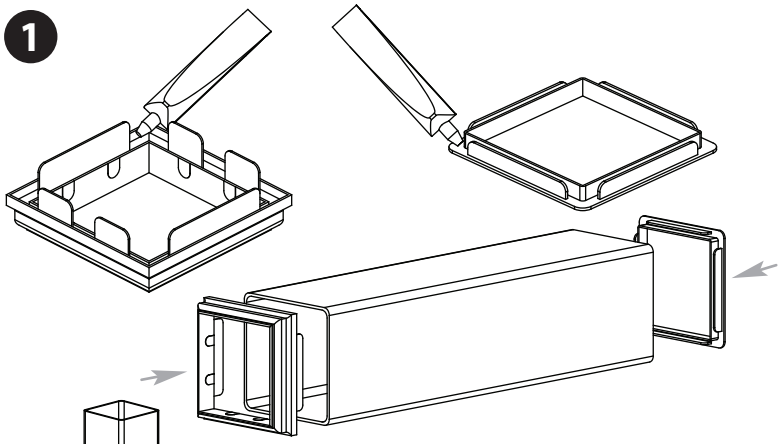


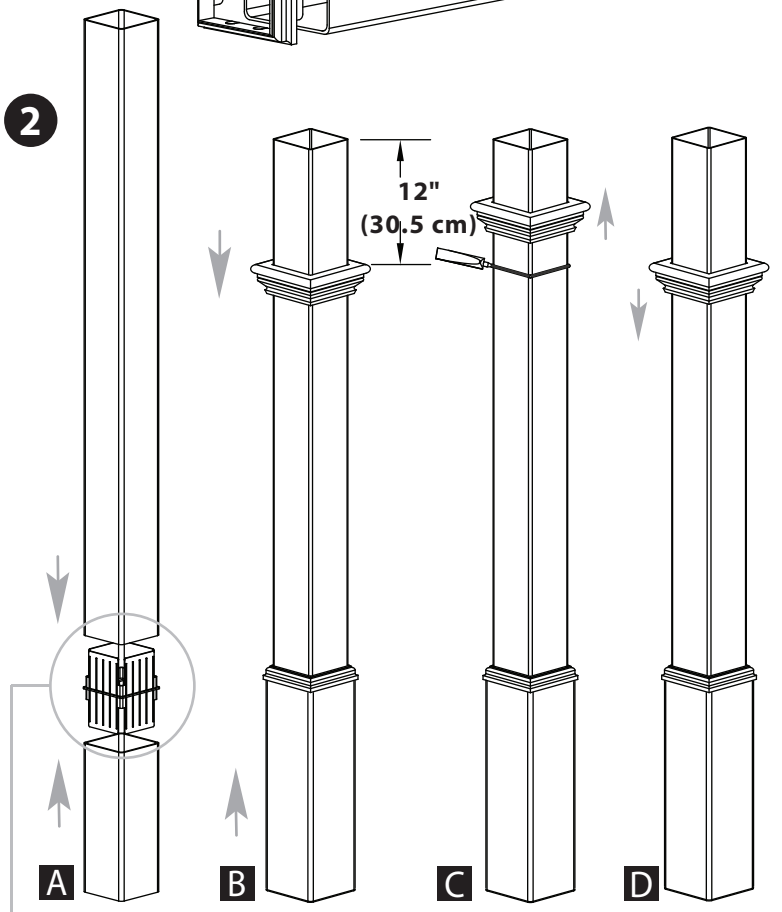


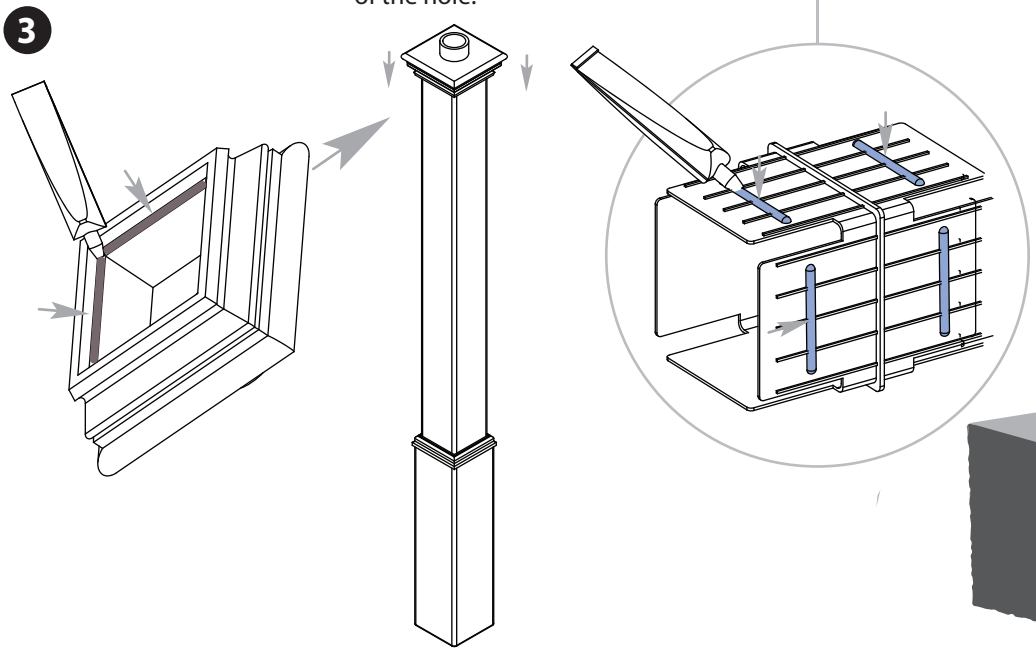


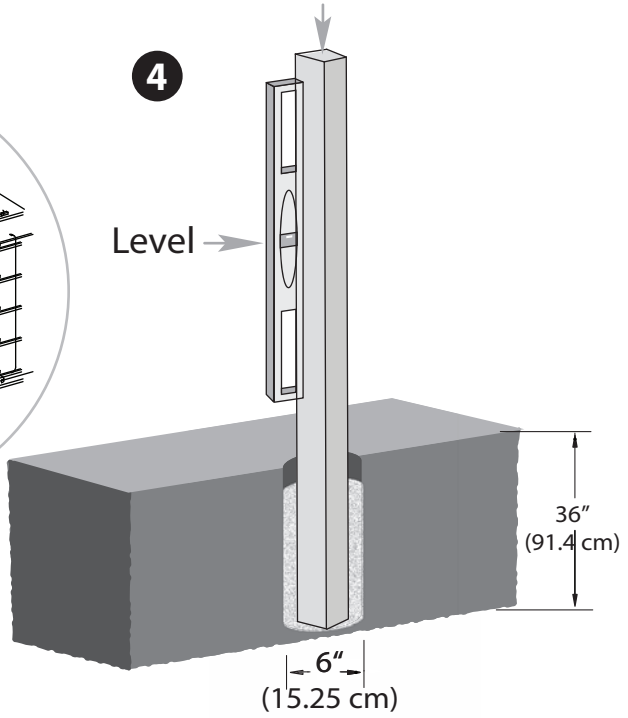

# Lamp Post Installation

## STEP FIVE

### *Lamp Post Installation*

**A**

If necessary, pre-wire the lamp by running the wire inside the cavity of the post through the universal 3 in. (7.62 cm)collar. If installing a solar lamp, disregard this step.

**B**

Slide the lamp post assembly over the wood post.

**C**

Line up the one corner of the vinyl post up against the wood post and fasten the two touching sides with the provided screws.

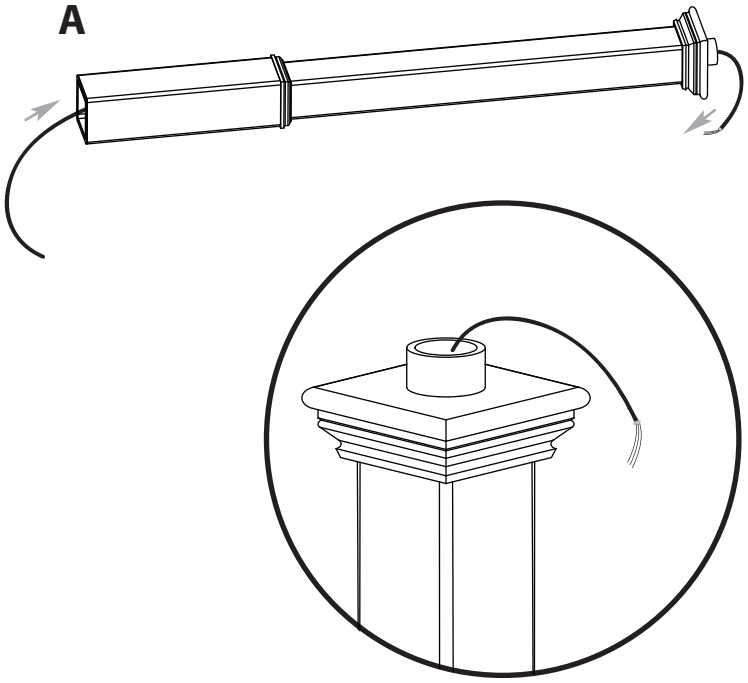


## STEP SIX

### *Installing Lamp*
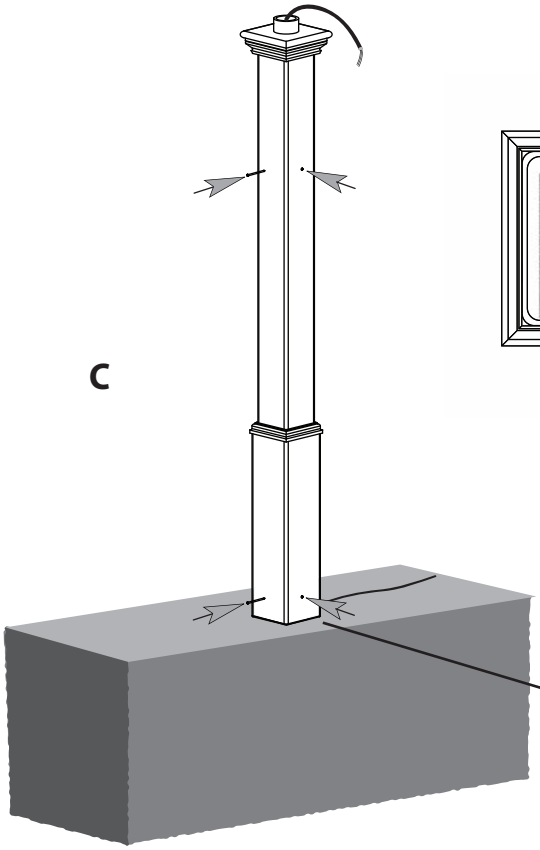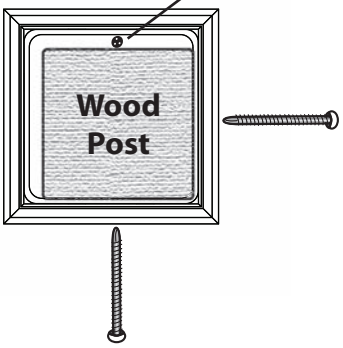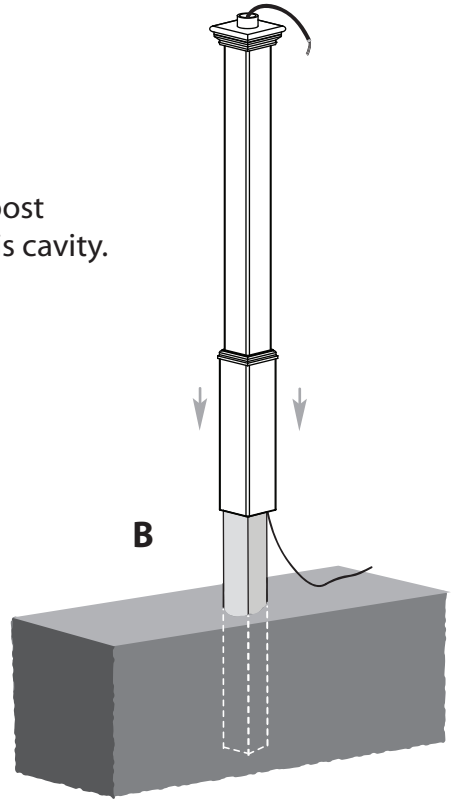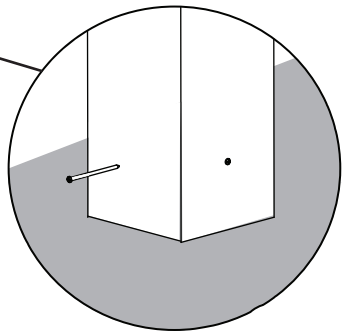
Follow the instructions included with the lamp (purchased separately) and secure it to the round collar on top of the post. You may need to modify how it attaches to the collar.