USE AND CARE GUIDE

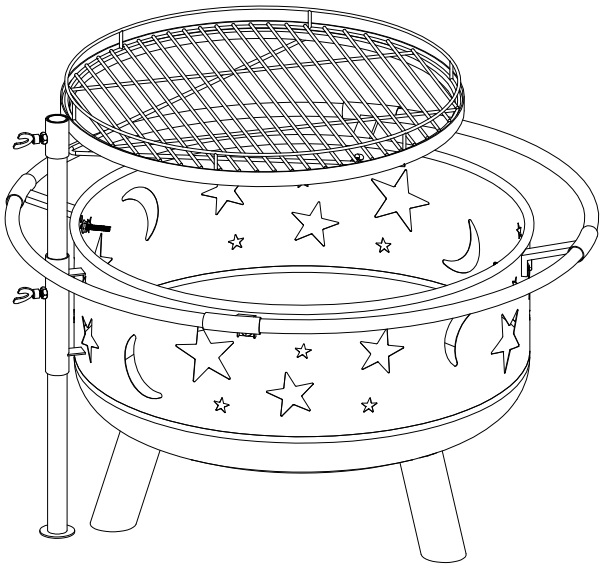

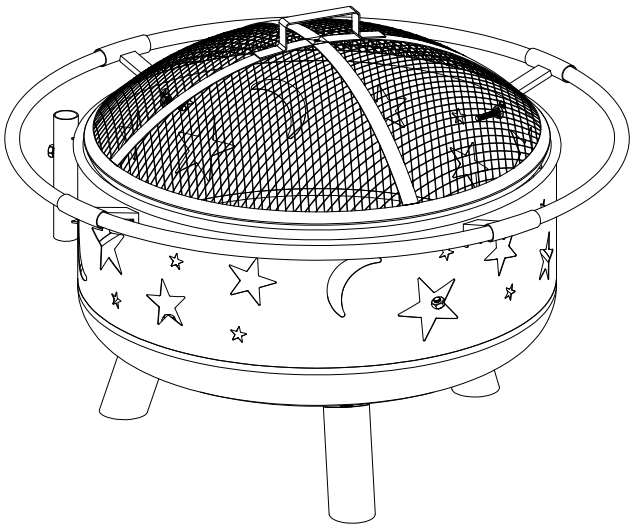

Questions, problems, missing parts? Before returning to the store,
please contact our Customer Service

service@alphamarts.com

THANK YOU

We appreciate the trust and confidence you have placed in PHI VILLA through the purchase of our product. We strive to continually create quality products designed to enhance your home. Visit us online to see our full line of products available for your home improvement needs. Thank you for choosing PHI VILLA!

Table of Contents

Warnings 2

Preparation 3

Assembly Instructions 4-6

Warranty 7

Warnings

WARNING!
CARBON MONOXIDE HAZARD! BURNING WOOD OR CHARCOAL PRODUCES CARBON MONOXIDE, WHICH HAS NO ODOR AND CAN CAUSE DEATH IF BURNED IN ENCLOSED AREAS. NEVER BURN WOOD OR CHARCOAL INSIDE HOMES, VEHICLES, TENTS OR ANY OTHER ENCLOSED AREAS.

- This fire bowl is intended for outdoor use only. Do not use on wooden decks.
- This fire bowl is intended to burn wood logs only. Do not burn coal, leaves, or other combustible materials in the fire bowl.
- Use only the fuel type(s) specified in the instructions. Using other fuel types is dangerous and could cause injury.
- Not for use by children. Keep children and pets away from the fire bowl.
- The fire bowl is hot. Use with caution. Do not touch the hot fire bowl with bare hands.
- Never leave the burning fire bowl unattended, and always extinguish the fire completely before leaving the fire bowl.
- Do not use near flammable or combustible objects or materials.
- When the fire bowl is in use, the handle on the mesh screen can reach extreme temperatures that can cause serious injury to an unprotected hand. Use a poker or an appropriate heat resistant glove or pad when handling.
- Check local fire regulations and municipal by-laws for safe use.
- Some parts may contain sharp edges—especially as noted in the manual. Wear protective gloves if necessary.
- The metal may become very hot during and after use. Do not touch the metal or try to move the unit while hot.
- Keep children away from the unit while in use until the fire is extinguished and the metal has cooled.
- Do not use on a wooden surface, or on grass, near walls or flammable articles, or under overhead coverings.
- Keep at least 3 feet away from all other articles during use.
- Do not overload the unit with fuel.
- Never use under low hanging tree branches,trellis,overhangs of any kind including covered porches.
- Never use gasoline,alcohol or volatile fluids to start or restart fires.

DANGER : Do not allow children to play with plastic wraps or small parts to prevent potential chocking hazard.

CAUTION: Read all the instructions before assembly. Failure to do so may result in faulty assembly and potential injury!

NOTE:
- KEEP THE FIRE PIT OUT OF THE WEATHER AND ELEMENTS.
- STORE THE FIRE PIT IN A DRY LOCATION OUT OF THE WEATHER.
- DO NOT LET THE FIREBOWL FILL WITH WATER.
- DO NOT DUMP ASHES WHERE A FIRE CAN BE STARTED.
- DISPOSE OF ASHES IN PROPER RECEPTACLE ONLY AFTER ASHES HAVE COOLED.
- USE ANY COVER ONLY AFTER THE FIRE PIT IS COMPLETELY COOL TO THE TOUCH.

Preparation

Before beginning assembly of product, make sure all parts are present. Compare parts with package contents list and hardware contents above. If any part is missing or damaged, do not attempt to assemble the product. Contact customer service for replacement parts.

Estimated Assembly Time: 10 minutes.

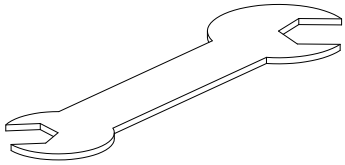



FIRE PIT PARTS LIST

No.	Parts	Qty
A	Bowl	1
B	Leg	3
C	Outer ring	4
D	Grate rod	1
E	Grill rack	1
F	Grill	1
G	Spark screen	1
H	Wood grate	1
J	Poker	1

HARDWARE LIST

No.	Hardware	Qty
S1	M8 Nut (pre-assembled)	6
S2	M6X35mm Bolts	4
S3	M6 Nut	4
S4	M6X10mm Nut	4
S5	Wing nut	2
S6	Flat pad (Pre- assembled)	6

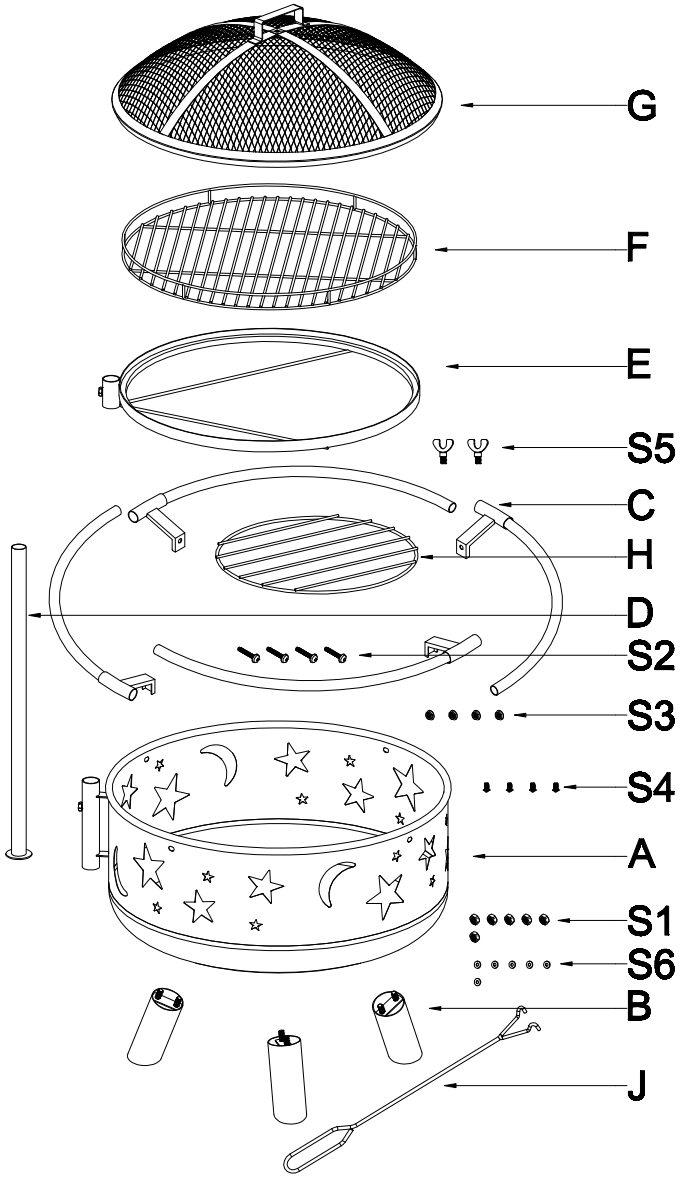

Assembly Instructions

Step 1: Assembling the legs
Assemble the three Legs (B) to the Fire bowl (A) using six pre-assembled M8 Nuts (S1) and six flat pad (S6), then tighten all Bolts securely.

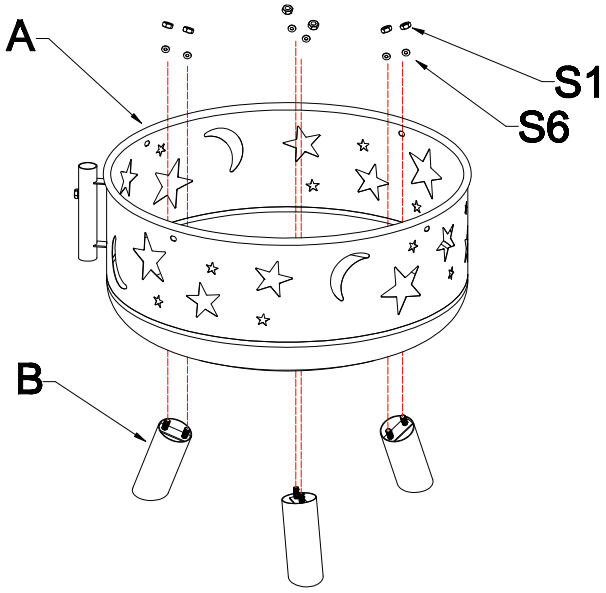

Step 2: Assembling the ring sections
Assemble each of the four ring sections (C) to the firebowl outside using four M6 x 35mm Bolts (S2) and four M6 Nuts (S3). Loosely tighten all bolts with Phillips Screwdriver and M6 wrench. Lastly assemble four M6 x 10mm bolts (S4) under the connector ,then tighten all bolts and nuts .

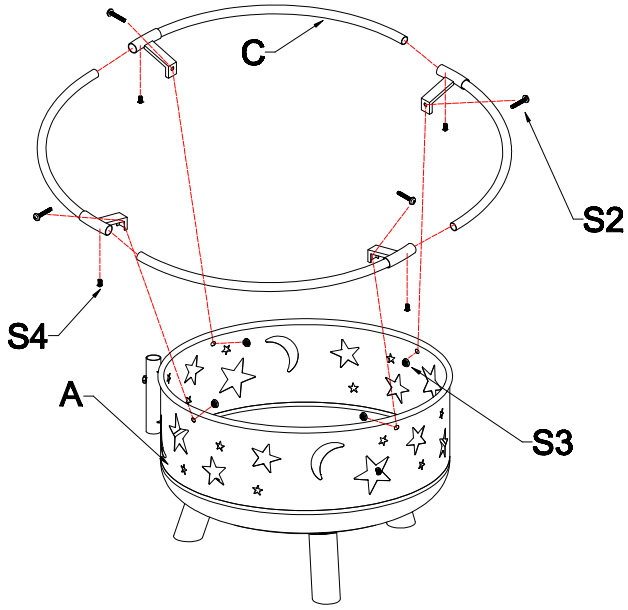

Assembly Instructions

Step 3: Place the wood grate and spark screen
Place the wood grate (H) onto the bottom of the firebowl (A). Always use the wood grate during use,then place the spark screen (G) onto the four pins.

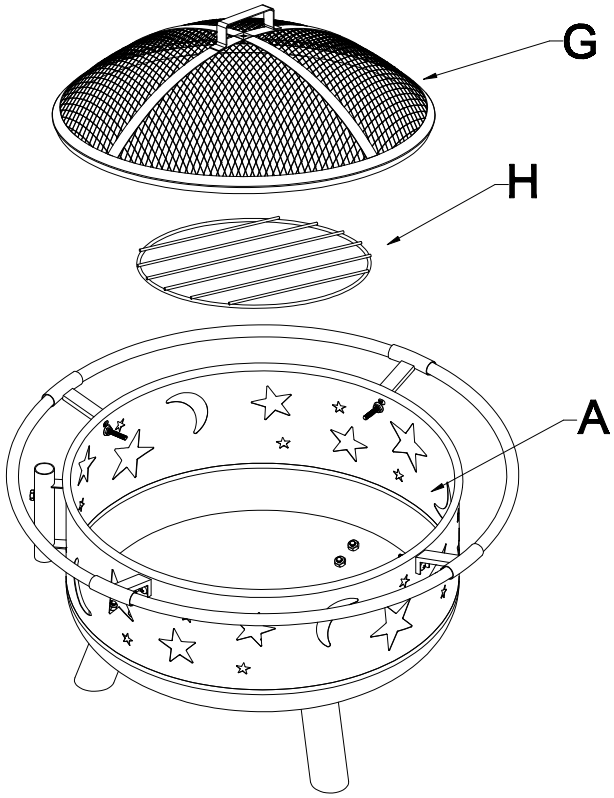

Step 4: For fire pit use, Place Poker (J) beside fire pit for use as needed.

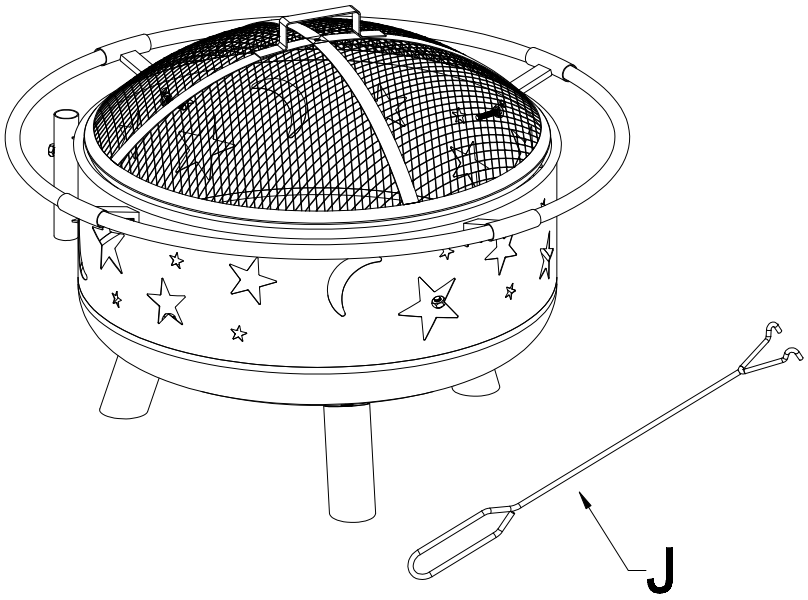

Assembly Instructions

How to use to cook food

Assembling the cooking grate

Remove the spark screen. Place the grate rod (D) into the holder of bowl, keep in place with the wing nut (S5) to fix the height, then insert the grill rack(E) into the grate rod on the suitable height using wing nut (S5) to fix. Finally, place the cooking grill (F) on the grill rack for cooking use at any time.

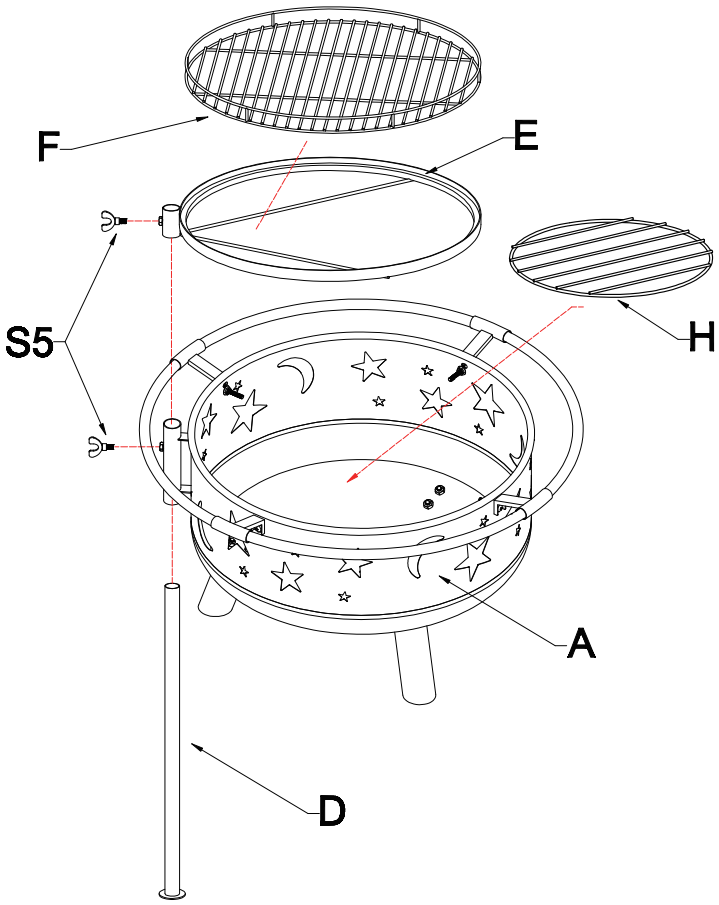

WARNING!
Never burn wood on the cooking grate.

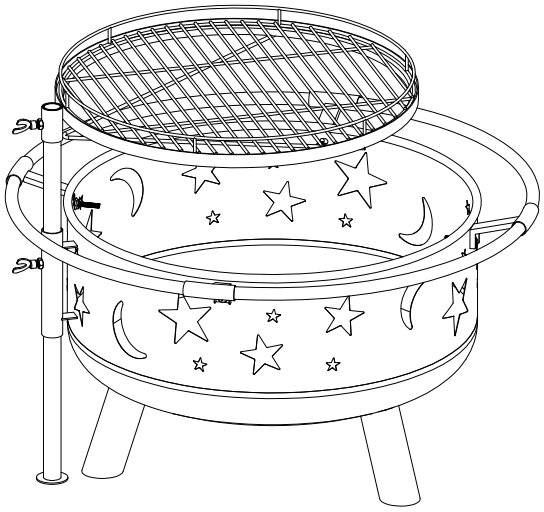

Warranty

LIMITED WARRANTY

This warranty is a limited warranty, and applies to the original purchase is required. This is a residential warranty and does not apply to commercial use. This collection carries a (1) year limited warranty and is valid from original date of purchase to the original owner (proof of purchase required).

WHAT IS COVERED

We warrant the frame to be free of Manufacturing defects to the original purchaser for one year.

WHAT IS NOT COVERED

This warranty does not cover commercial use, hardware, acts of nature, fire, freezing and abusive.
In addition, purchased parts are not covered under this warranty.
We reserve the right to make substitutions with similar merchandise, if the model in question is no longer in production.

For a copy of our full limited warranty, please contact our customer service team below.

Questions, problems, missing parts? Before returning to the store
please contact our Customer Service

service@alphamarts.com

1-877-606-2818