X 2

28" Gas Fire Pit Table
Model:FP13
NO.:YM20260725

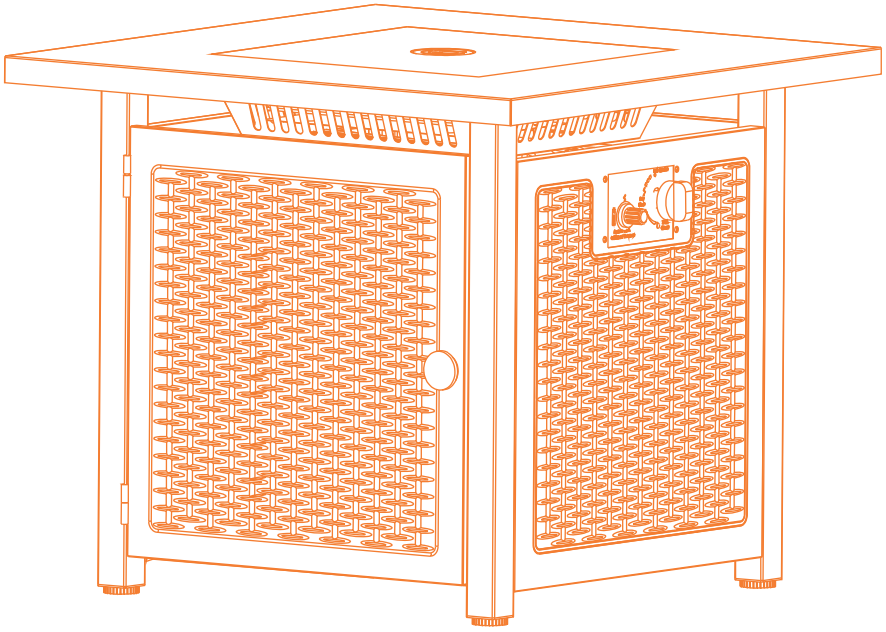

DESIGN CERTIFIED®

CERTIFIED®

C US
302042

HELP CENTER

Have questions about this product? Contact us, and we'll assist you!

- Customer Support Email: **support.us@soforoom.com**

* Upon receiving your email, we'll respond within **48** working hours.

SAFETY INFORMATION

SAFETY WARNING

Read the instruction before use. This appliance must be installed in accordance with such regulations as are enforced

DANGER

FIRE OR EXPLOSION HAZARD
If you smell gas:
- Shut off gas to the appliance.
- Extinguish any open flame.
- If odor continues,leave the area immediately
- After leaving the area, call your gas supplier or fire department.

Failure to follow these instructions could result in fire or explosion, which could cause property damage, personal injury, or death.

WARNING: For Outdoor Use Only!

Improper installation, adjustment, alteration, service or maintenance can cause property damage, personal injury or loss of life.
Read this installation, operating, and mainte nance instructions thoroughly before installing or servicing this equipment.

WARNING: For Outdoor Use Only!

Installation and service must be performed by a qualified installer, service agency,or gas supplier.

Danger CARBON MONOXIDE HAZARD

This appliance can produce carbon monoxide which has no odor.
Using it in an enclosed space can kill you.
Never use this appliance in an enclosed space such as camper, tent, car or home.

WARNING

FOR YOUR SAFETY:
If the information in this manual is not followed exactly, a fire or explosion may result causing property damage, personal injury or loss of life.
WHAT TO DOIF YOU SMELL GAS:
Do not try lighting any appliance, Do not touch any electric switch; do NOT use any phone in your building.
Immediately call your gas su-plier from a neighbor's phone. Follow the gas supplier's instruction.
If you cannot reach your gas supplier, Call the fire depart-ment.
Installation and service must be performed by a qualified installer, service agency or gas supplier. Save these instruc-tions for future reference. If you are assembling this unit for someone else, give this manual to him or her to read and save for future reference.

INSTALLER: leave this manual with the appliance.
CUSTOMER: Retain this manual for future reference.

WARNING

- Do not store or use gasoline, or other flammable vapors and liquids, in the vicinity of this or any other appliance.
- An LP-cylinder not connected for use shall not be stored in the vicinity of this or any other appliance.

Please keep this instruction manual for future reference

DANGER:FLAMMABLE GAS UNDER PRESSURE.

LAKING LP-GAS MAY CAUSE A FIRE OR EXPLOSION IF IGNITED CAUSING SERIOUS BODILY INJURY OR DEATH. CONTACT LP GAS SUPPLIER FOR REPAIRS,OR DISPOSAL OF THIS CYLINDER OR UNUSED LP-GAS.

WARNING:FOR OUTDOOR USE ONLY.*

DO NOT USE OR STORE CYLINDER IN A BUILDING,GARAGE, OR ENCLOSED AREA.

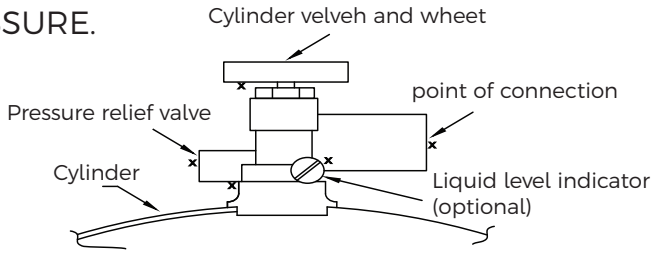

DO NOT REMOVE,DEFACE,OR OBLITERATE THIS LABEL
***EXCEPT AS AUTHORIZED BY ANSI/NFPA 58.**

DANGER. Do not store a spare LP cylinder under or near a barbecue grill,or other heat sources.NEVER fill an LP cylinder beyond 80%fult:a fire causing death or serious injury may occur.

WHEN CONNECTING FOR USE:

- Use only in compliance with applicable codes.
- Read and follow manufacturer's instructions.
- Consult the manufacturer's instructions concerning the cylinder connection provided with your appliance
- Be sure the regulator vent is not pointing up.
- Turn off all valves on the appliance.
- Light appliance(s) following manufacturer's instructions.
- Do not check for gas leaks with a match or open flame.Apply soapy water at areas marked "X".Open the cylinder valve.If a bubble appears,close the valve and have an LP-gas service person make needed repairs.Also,check appliance valves and connections to make sure they do not leak before lighting the appliance.
- When the appliance is not in use,keep the cylinder valve closed.

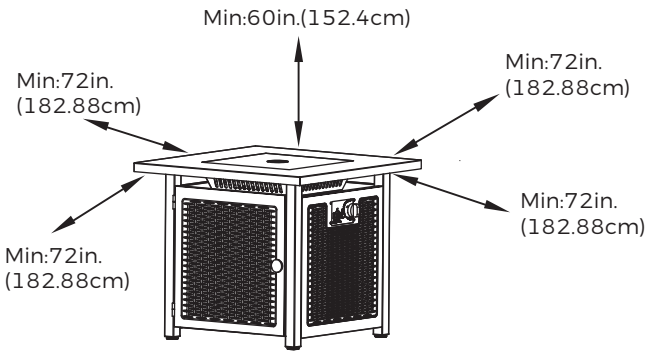

WARNING:

- Know the odor of LP-gas.If you hear, see or smell leaking LP-gas,immediately get everyone away from the cylinder and call the Fire Department.Do not attempt repairs.
- Caution your LP-gas supplier to:
  Be certain the cylinder is purged of trapped air prior to first filling.
  Be certain not to overfill the cylinder.
  Be certain the cylinder requalification date is checked.
- LP-gas is heavier than air and may settle in low places when dissipating.
- Do not allow children to tamper or play with the cylinder.
- Contact with the liquid contents of cylinder will cause freeze burns to the skin.
- When not connected for use,keep cylinder valve turned off.Self contained appliances shall be limited to a cylinder of 30 Ib capacity or less.
- Do not use,store or transport cylinder where it would be exposed to high temperatures.The relief valve may open allowing a large amount offlammable gas to escape.
- When transporting,keep the cylinder secured in an upright position which the cylinder valve turned off.

WARNING:

- READ THE INSTRUCTION MANUAL BEFORE ATTEMPTING TO ASSEMBLE OR OPERATE THIS THE PRODUCT.
- Keep the screws and parts out of reach of children.

⚠ WARNING

You must provide propane gas and a propane cylinder. Use a standard 20 lb. propane cylinder only.
Use this heater only with a propane vapor withdrawal supply system. See Chapter 5 of the Standard for Storage and Handling of Liquefied Petroleum Gas, ANS/NFPA 58. Your local library or fire department should have this book.
The pressure regulator and hose assembly supplied with the appliance must be used.
The installation must conform with local codes, or in absence of local codes, with National Fuel Gas Code. ANSIZ223.1
A dented, rusted, or damaged propane cylinder may be hazardous and should be checked by your cylinder supplier. Never use a propane cylinder with a damaged valve connection.
The Lp-gas supply cylinder must be constructed and marked in accordance with the U.S. Department of Transportation (D.O.T) Specifications for Lp-Gas Cylinders, or the standard for Cylinders, Spheres and Tubes for Transportation of Dangerous Good and Commission. CAN/CSA-B339, as applicable.
The Lp-gas supply cylinder must be provided with a cylinder connection device compatible with the connection for the appliance
The cylinder used must include a collar to protect the cylinder valve.
The Lp-gas supply cylinder must be provided with a listed overfill protection device (OPD).

Do not store a spare LP gas cylinder under or near this appliance
Never fill the cylinder beyond 80 percent full.
For appliances designed to use a CGA No. 791 IQCC connection.
Place the dust cap on the cylinder valve outlet whenever the cylinder is not in use.
Note: Gas supply pressure: 25 PSI to 250 PSI.

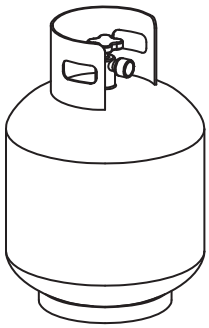

Standard 20 lb. tank

⚠ WARNING

FUELS USED IN LIQUFIED PROPANE GAS APPLIANCES, AND THE PRODUCTS OF COMBUSTION OF SUCH FUELS, CAN EXPOSE YOU TO CHEMICALS INCLUDING BENZENE, WHICH IS KNOWNTO THE STATE OF CALIFORNIA TO CAUSE CANCER AND CAUSE BIRTH DEFECTS OR OTHER REPRODUCTIVE HARM.
For more information go to: ***www.p65warnings.ca.gov.***

⚠ WARNING

Solid fuels shall not be burned in this appliance.
The installation must conform with local codes or, in the absence of local codes, ANSIZ223. 1/NFPA54, NFPA58 NaturaGas and Propane Installation Code, CSA B149.1, or Propane Storage and Handling Code, B149.2
This appliance must be isolated from the gas supply piping system by closing its individual manual shutoff valve during any pressure testing of the gas supply piping system at test pressures equal to or less than 1/2 psi (3.5 kpa)
Max. gas supply 6791.3 in wc (1725 kpa). Manifold pressure 11 in wc (2.74 kpa)
Prior to use, check for damaged parts such as hoses, regulators, pilots, or burners.
Inspect the fuel supply connection for signs of leakage (including the hose for the LP models) before each use of the appliance.
All leak tests should be done with a soapy solution. NEVER USE AN OPEN FLAME TO CHECK FOR LEAKS
Children and adults should be alerted to the hazards of high surface temperatures and should stay away from the appliance to avoid burns or clothing ignition. This appliance comes with a heat shield which is an important safety component preventing contact with the fire bowl when adjusting the propane valve.
Young children should be carefully supervised when they are in the area of the heater.
Clothing or other flammable materials should not be hung from the heater or placed on or near the heater.
Any guard or other protective device removed for servicing the heater, must be replaced prior to operating the heater installation and repair should be done by a qualified service person. The heater should be inspected before use and at least annually by a qualified service person.
More frequent cleaning may be required as necessary. It is imperative that the control compartment, burners, and circulating air passageways of the heater be kept clean.
Keep the appliance area clear and free from combustible materials, gasoline, and other flammable vapors and liquids.
DO NOT OBSTRUCT the combustion process or air ventilation flow.
Keep the ventilation opening(s) of the cylinder enclosure free and clear from debris.
The appliance should be used in a well-ventilated space and not in a building, garage or any other enclosed area.
An appliance may be installed within a shelter if the shelter meets one of the following conditions:
The shelter has walls on all sides, but with no overhead cover.
shelter is within a partial enclosure which includes side walls. These side walls may be parallel, as in a breezeway, or at right angles to each other

Warranty

1 YEAR LIMITED WARRANTY

- We warrant the metal frame and burner to be free of manufacturing defects to the original purchaser for one year.
- Proof of purchase(dated register receipt)is required for warranty claims.

WHAT IS NOT COVER

It remains the customer's responsibility for freight and packaging charges to and from our service center.This warranty does not cover commercial use,acts of nature,fire,freezing and abusive use.In addition,purchased parts are not covered under this warranty.We reserve the right to make substitutions with similar merchandise,if the model in question is no longer in production.

Pre-Assemlbly

PLANNING ASSEMBLY

Carefully remove all pieces from the carton and make sure that you have all parts (refer to the hardware and package contents list).If you are missing parts,please contact after-services for further assistance.

YOUR OWNER'S MANUAL

Keep and store this Owner's Manual for future reference.It contains important instructions and procedures for safety and maintenance.

NOTE: Please read and understand the entire manual before you assemble,operate,or install the fire pit.

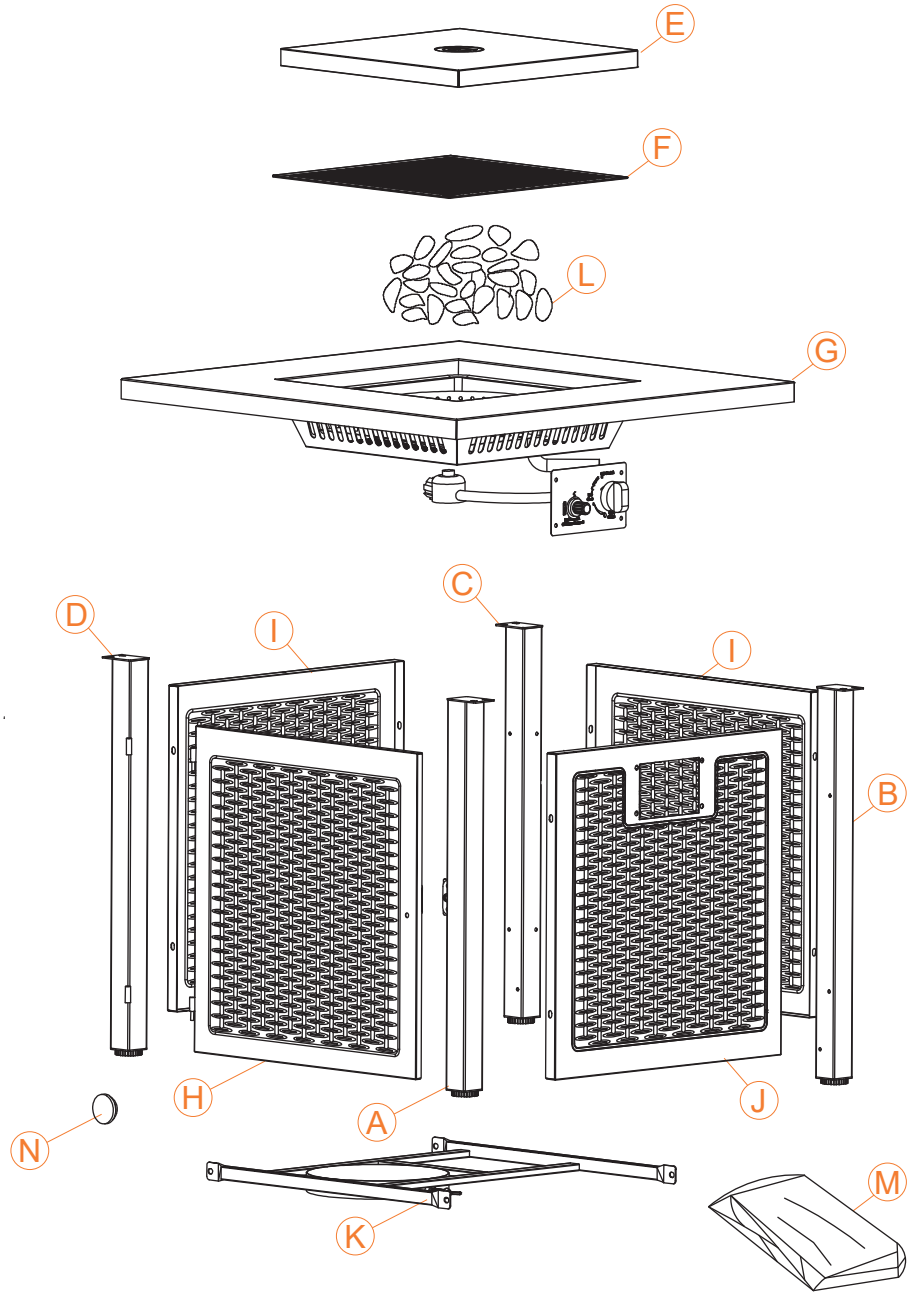
E
F
L
G
C
D
I
I
B
H
A
J
N
K
M

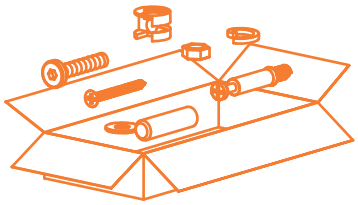

AA × 25

M6×10mm

BB × 4

M5×10mm

CC × 4

M5mm

DD × 1

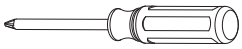

Phillips Screwdriver

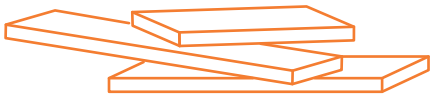

A ×1

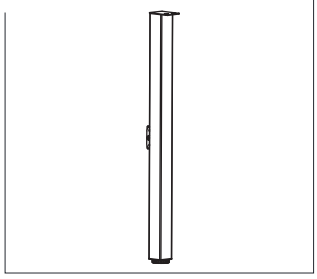

B ×1

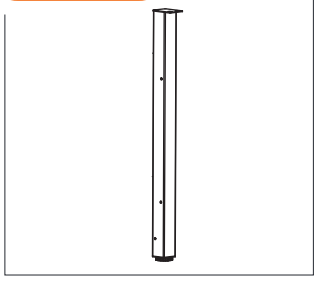

C ×1

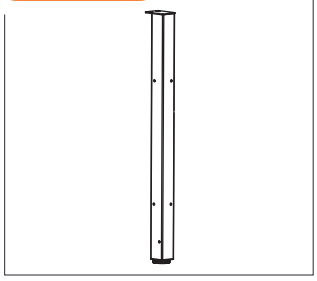

D ×1

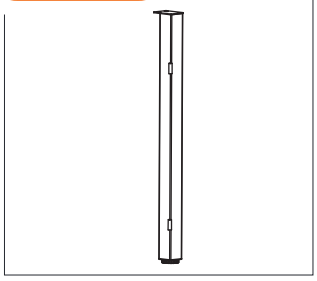

E ×1

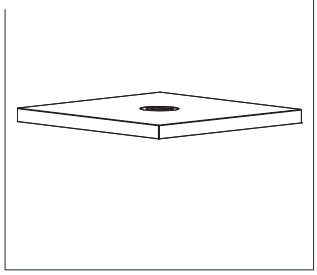

F ×1

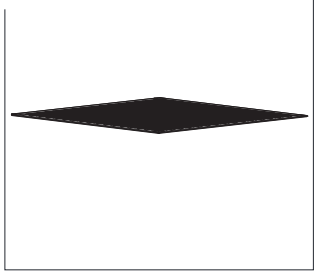

G ×1

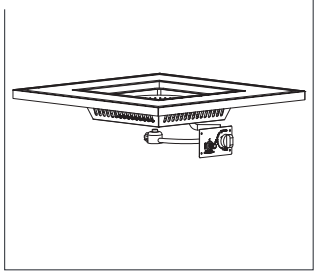

H ×1

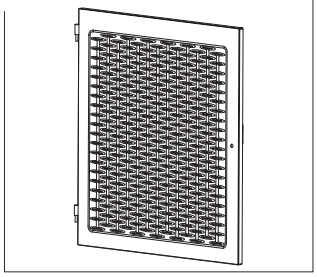

I ×2

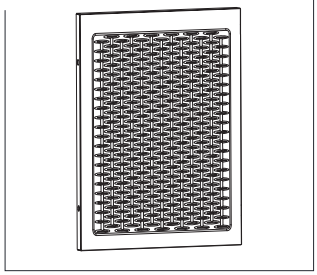

J ×1

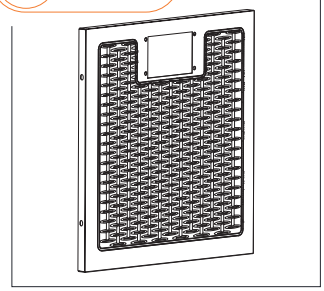

K ×1

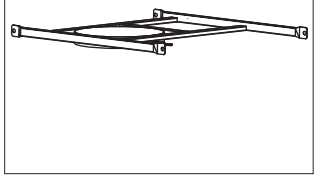

L ×1

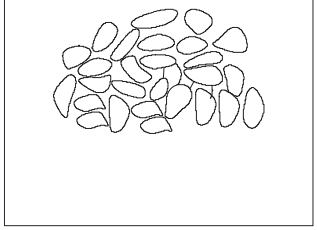

M ×1

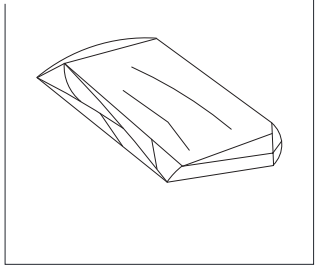

N ×1

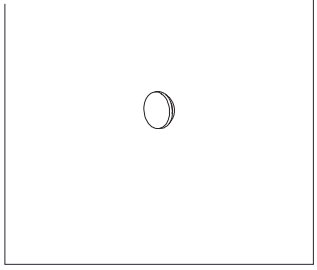

1

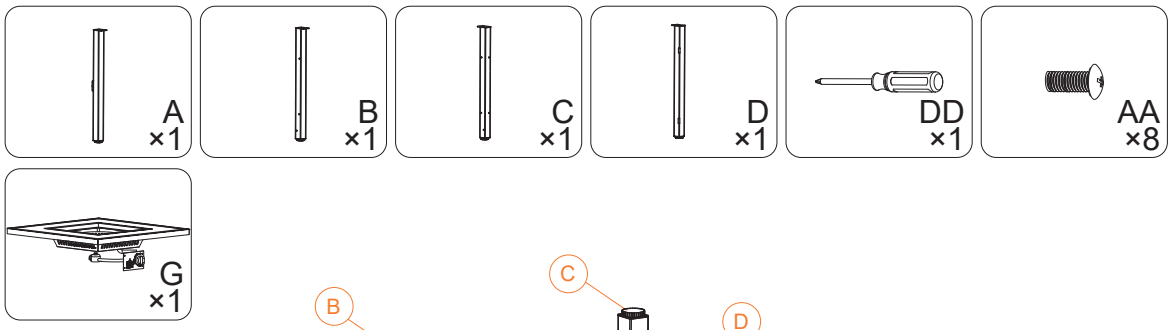

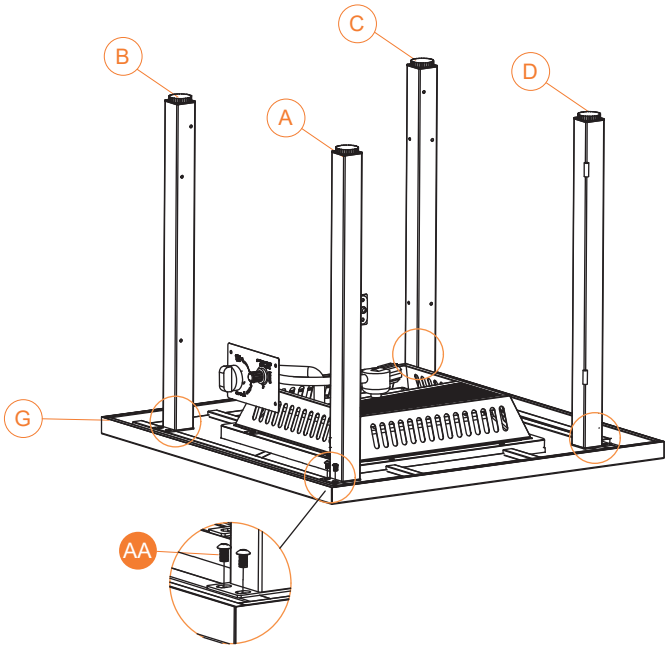

2

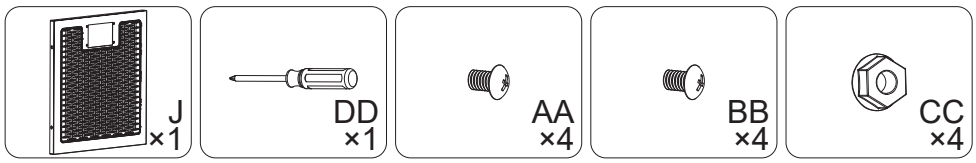

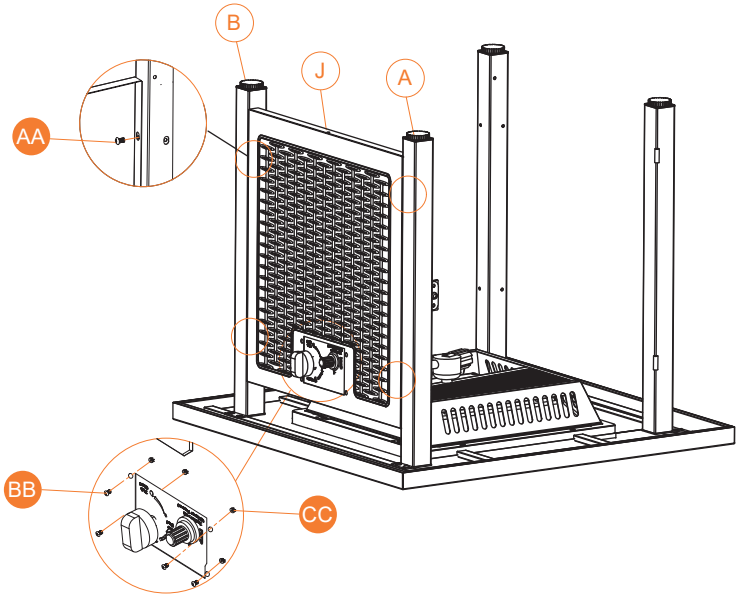

3

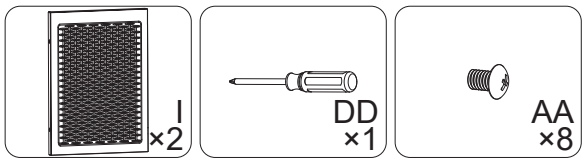

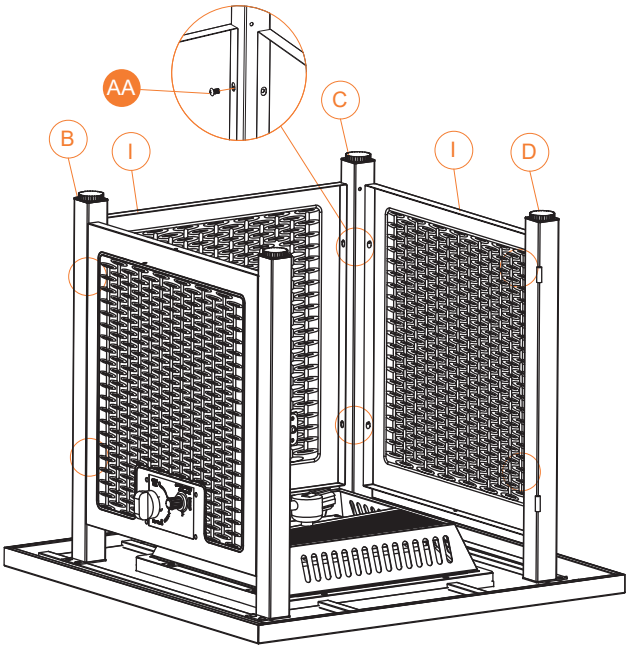

4

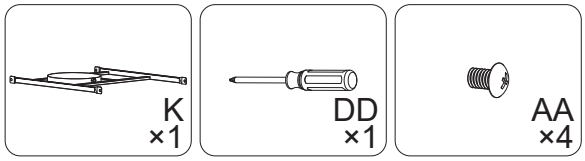

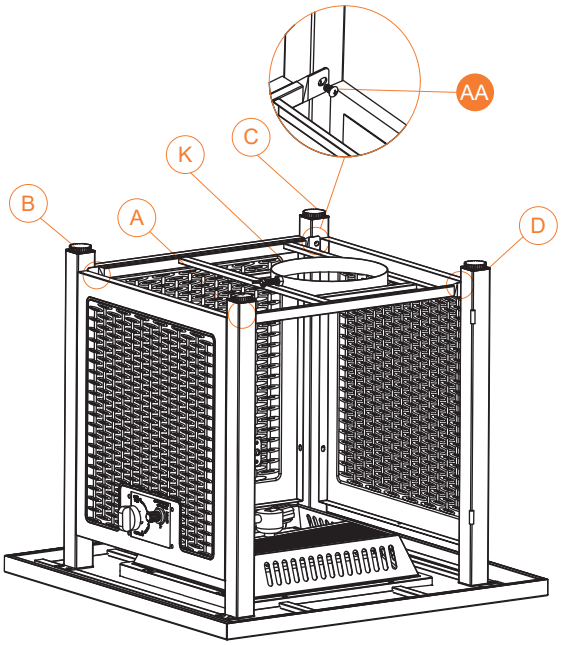

5

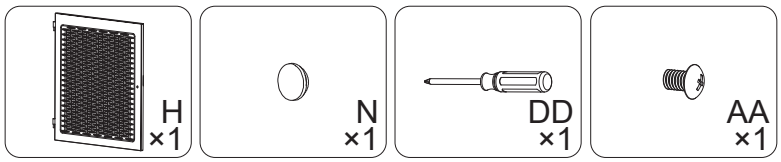

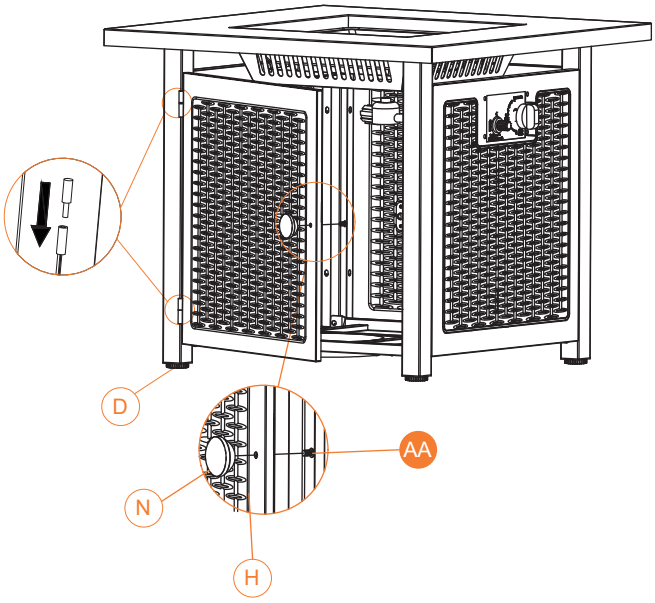

6

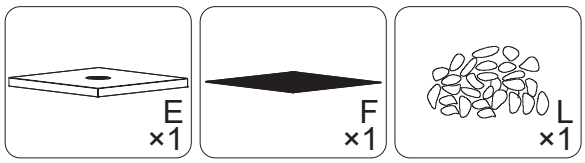

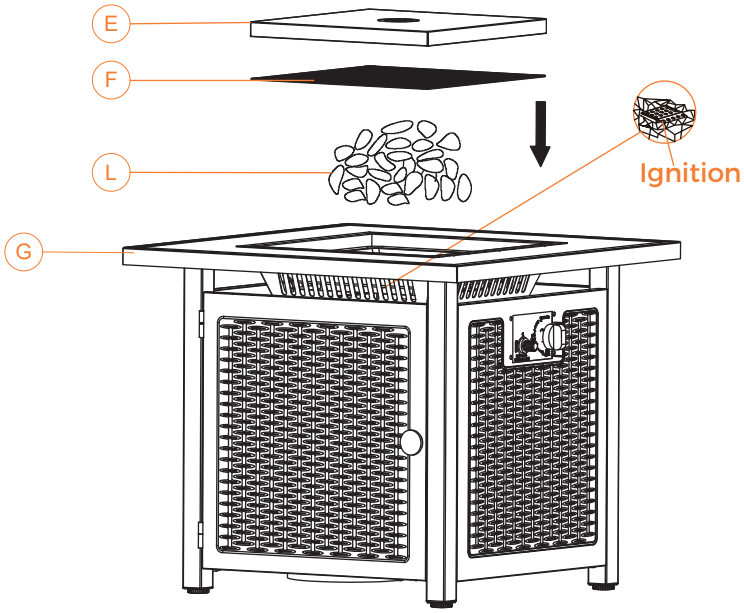

7

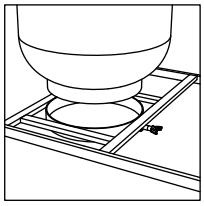

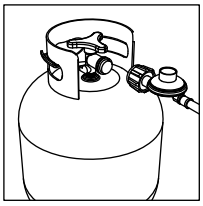

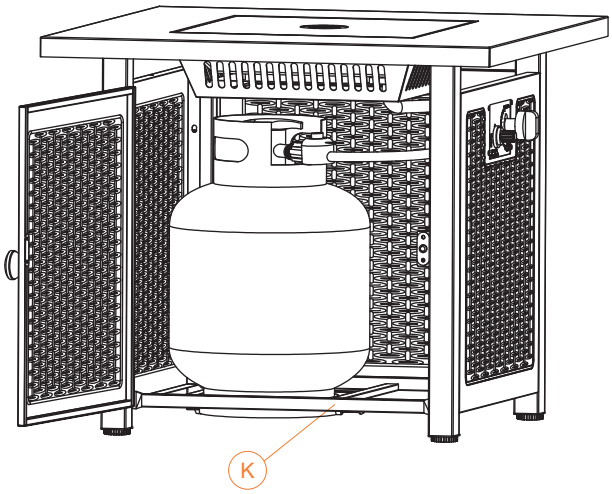

8

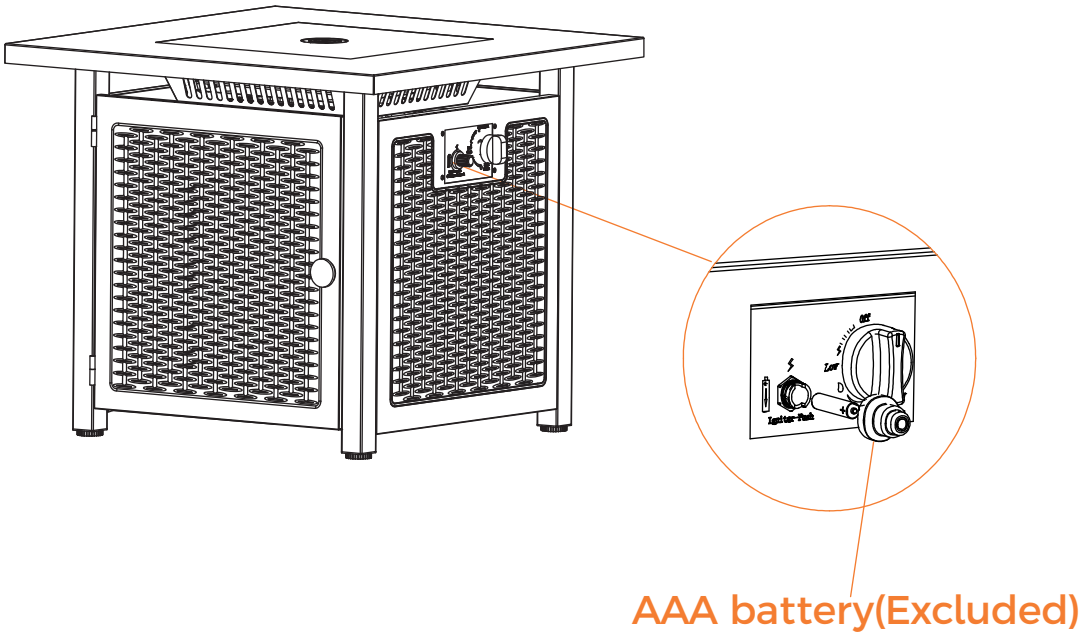

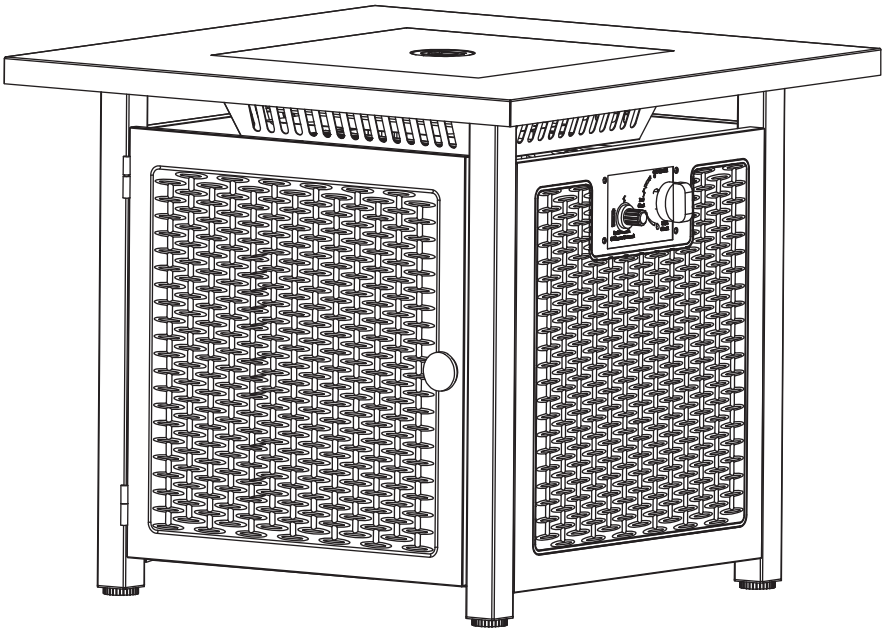

OPERATING

WARNING Never use this appliance for other than the intended use. **DO NOT** use this appliance to prepare food.

Initial Lighting: When lit for the first time,the appliance emits a slight odor.This is a normal temporary condition caused by the"bum-in "of internal paints and lubricants used in the manufacturing process and does not occur again.Simply run the main burner on high for approximately one-half hour.

WARNING

Children and adults should be alerted to the hazards of high surface temperatures and should stay away from the appliance to avoid burns or clothing ignition.The appliance comes with a heat shield which is an important safety component preventing contact with the fire bowl when adjusting the propane valve. Children should be carefully supervised when they are in the area of the appliance. Clothing or other flammable materials should not be hung from the appliance,or placed on or near the appliance.The area above the fire pit may be extremely hot.Direct contact with these surfaces should be avoided in order to prevent burns or clothing ignition.

Any guard or protective device removed for servicing the appliance must be replaced prior to operating the appliance.Installation and repair should be done by a qualified service person.

The appliance should be inspected before each use and at least annually by a qualified service person.More frequent cleaning may be required necessary.It is imperative that the control compartment,burners and circulating air passageways of the appliance be kept clean.

WARNING

Never use the appliance while it is raining.Always turn the appliance off when raining. Never use the appliance if the burner is damaged.Inspect the burner before each use.Ensure that no debris such as leaves,grass or other objects have entered or are on the appliance.If the burner is damaged it must be replaced prior to using this appliance with a replacement burner specified by your dealer. Inspect the hose assembly before each use.If there is evidence of excessive abrasion or wear,or if the hose is damaged it must be replaced prior to using the appliance with a replacement hose assembly specified by your dealer.

WARNING

Any modification to the appliance may compromise the safety of this appliance.Special concern is as follows:

Do not bypass the thermocouple safety.

Do not operate the appliance if any parts have been under water.Immediately call a qualified service technician to inspect the appliance and replace any part of the control system,and any gas control,which has been under water.

LEAK TESTING OPERATION

WARNING A leak test must be performed annually or if a part of the gas system is replaced.

WARNING Never use an open flame to check for gas leaks.Be certain no sparks or open flames are in the area while you check for leaks.Sparks or open flames will result in a fire or explosion,damage to property,serious bodily injury, or death.

LEAK TESTING:

1.Make 2-3 oz.of leak detection solution by mixing one part liquid dishwashing soap with three parts water.
2.Make sure all fire pit and light valves are OFF.
3.Apply several drops of solution where the hose attaches to the regulator.
4.Apply several drops of solution where the regulator connects to the cylinder.
5.Turn cylinder valve ON.

If bubbles appear at any connection, there is a leak:

1.Turn cylinder valve OFF.
2.If the leak is at hose/regulator connection:tighten the connection and perform another leak test. If bubbles continue appearing, pls contact after-services for assistance.
3.If the leak is at regulator/cylinder valve connection: disconnect, reconnect, and perform another leak test.If you continue to see bubbles after several attempts, the cylinder valve is defective,and contact after services for assistance.

If NO bubbles appear at any connection, the connections are secure.

NOTE: Whenever gas connections are loosened or removed,you must perform a complete leak test.

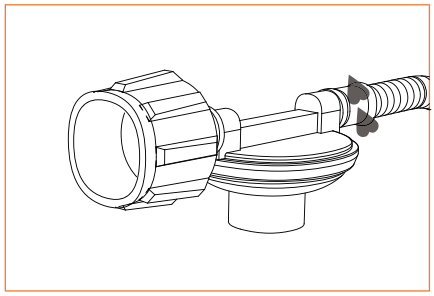

Hose/Regulator Connection

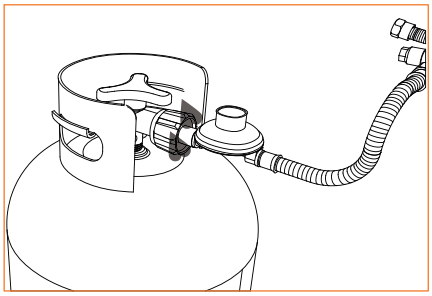

Regulator/Cylinder Connection

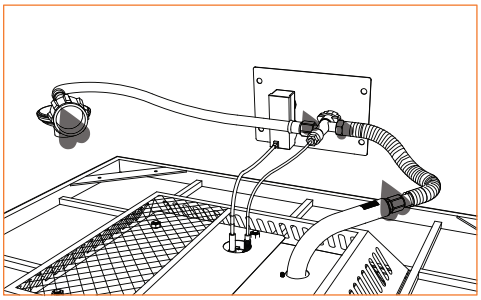

LIGHTING

⚠ CAUTION

Keep the outdoor gas appliance area clear and free from combustible materi-als,gasoline and other flammable vapors and liquids.
Do NOT obstruct the flow of combustion and ventilation air.
Check and clean burner/venturi tubes for insects and insect nests.A clogged tube can lead to a fire.

1.Make sure all labels,packaging and protective films have been removed from the outdoor fire pit.
2.Control knob must be in the“OFF”position (Figure 1).
3.Full open LP cylinder valve.
4.Press the control knob, turn counterclockwise to the "High" position, Continue to hold. press the control knob for 30 seconds. When the burner lights, release the control knob (Figure 2).
5.Adjust the flame to the desired height with the gas control knob.Visually check the burner flames as picture below (Figure 3).
6.If the burner will not light with the electronic igniter,hold a lit long match or lit long butane lighter to the ignition area of the burner and continue with step 5.

⚠ WARNING

If the burner does not light within 10 seconds,turn the valve off and wait 5 minutes for gas to dissipate before repeating the procedure.

⚠ WARNING

The surface of the fire pit can remain extremely hot for a period after use.Allow 45 minutes to cool to dissipate before repeating the procedure.

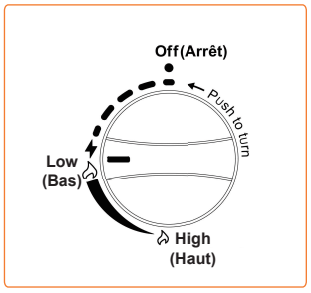

Figure 1

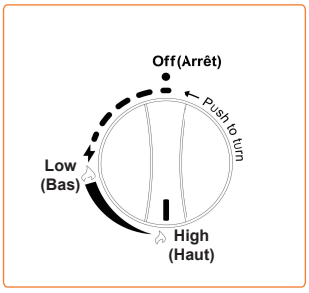

Figure 2

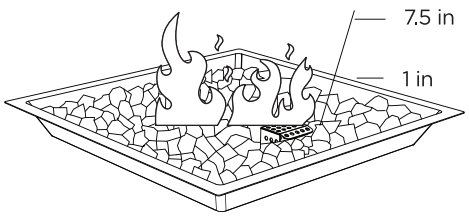

Figure 3

Shut Down:

1.To extinguish burner depress the control knob and continue to turn it clock-wise to“OFF”.
2.Turn cylinder valve clockwise to“OFF”and disconnect regulator when the fire pit is not in use.

MAINTENANCE

Storage between uses:

1. Turn the control knob to the "OFF"position.
2. Disconnect LP source.
3. Store the fire pit table upright in an area sheltered from direct contact with inclement weather(such as rain,sleet,hail,snow,dust and debris).
4. If desired,cover the fire pit table to protect exterior surfaces and to help prevent build up in air passages.

NOTE: Wait until heater is cool before covering.

Storage during periods of extended inactivity or when transporting:

1. Turn the control knob to "OFF"position.
2. Disconnect the LP source and move to a secure,well ventilated location outdoors. **DO NOT** store in a location that will exceed 125 T.
3. Store the fire pit table upright in an area sheltered from direct contact with inclement weather (such as rain,sleet,hail,snow,dust and debris).
4. If desired,cover the fire pit table to protect exterior surfaces and to help prevent build-up in air passages.

NOTE: Wait until the fire pit table is cool before covering.

CARE AND CLEANING

To enjoy years of outstanding performance from your fire pit table,make sure you perform the following maintenance activities on a regular basis:

1. Whenever the conducting hose/regulator inspection,pull out the door using the handle on the door panel to gain access.
2. Keep exterior surface clean.
3. Use warm soapy water for cleaning.Never use flammable or corrosive cleaning agents.
4. While washing your unit,be sure to keep the area around the burner dry at all times. If the gas control is exposed to water, do NOT try to use it. It must be replaced.
5. Keep the appliance area free and clean from combustible materials,gasoline or other flammable vapors and liquids.
6. At least once a year,the unit should be inspected for the presence of spiders, spider webs or other insects.
7. Air flow must be unobstructed.Keep controls,burner,and circulating air passageways clean.Signs of possible blockage include:
   Gas odor with extreme yellow tipping of flame.
   The fire pit table does NOT reach the desired temperature.
   Heat glow is excessively uneven.
   Heat makes popping noises.

CARE AND CLEANING (CONTINUED)

8. Spiders and insects can nest in burners or orifices.This dangerous condition can damage the fire pit table and render it unsafe for use.Clean burner holes by using a heavy-duty pipe cleaner.Compressed air may help clear away smaller particles.
9. Carbon deposits may create a fire hazard.Clean reflector, thermocouple, and emitter screen with a dry cloth if any carbon deposits develop.
10. The burner is made from stainless steel,but extreme heat and a corrosive environment can cause surface corrosion to occur.This can be removed with a brass wire brush.Inspect the burner at least annually for cracks,insect nests, excessive corrosion or any other damage.If the burner is damaged,it must be replaced with a burner specified by the manufacturer before the appliance is put into operation.

TROUBLESHOOTING

PROBLEM	PROBLEM CAUSE	SOLUTION
The flame and heat are low when the valve is turned to high.	The propane lighting procedure was not followed correctly.	Ensure lighting procedure is followed carefully.The valve must be in the off position when the tank valve is turned on. Turn the tank on slowly to allow pressure to equalize.See Lighting Instructions in the Operating Section.
The burner will not light with the igniter, but will light with a match.	The battery is either dead or installed incorrectly.	Check the installation or replace with a new battery.
	There is a loose electrode wire or switch terminal wires.	Check that the electrode wire is firmly pushed onto the terminal on the back of the igniter. Check that the lead wires from the module to the ignition switch(if equipped)are firmly pushed onto their respective terminals.
The regulator is humming.	This is a normal occurrence on hot days.	This is not a defect.It is caused oy internal vibrations in the regulator and does not affect the performance or safety of the gas heater. Humming regulator will not be replaced.

TROUBLESHOOTING(CONTINUED)

PROBLEM	PROBLEM CAUSE	SOLUTION
Burners burn with a yellow flame,accom-panied by the smell of gas.	There is possibly a spider web or other debris.	Thoroughly clean the burner venturi.See the Maintenance section.
The burner will not stay lit when the control knob is released.	The knob is not being held in long enough.	The thermocouple must have time to heat up.Hold the knob in for 30 seconds after the burner lights, then release.
	lt is too windy outside.	The unit will shut down if winds are greater than 10 mph (16 km/h).Either locate the fire pit to a different area or use when it is less windy.
	Lava rock or debris are in the ignition area of the burner preventing the thermocouple from being fully engulfed in flame.	Ensure there is no lava rock or other debris in the ignition area, and that the small hole below the thermocouple is unobstructed.
	Either the thermocouple or thermocouple connection is dirty.	Clean the thermocouple and clean the connection between the valve and thermocouple. Ensure the connection is properly tightened.
	Either the thermocouple or valve is faulty.	Replace thermocouple and/or valve.
The valve is set to high but there is low heat output.There is also a rumbling noise and a fluttering blue flame at the burner surface.	There is not enough gas.	Check the gas level in the pro-pane cylinder.
	The supply hose is pinched.	Reposition the supply hose as necessary.
	The burner orifice is either dirty or clogged.	Clean the burner orifice.
	There are spider webs or other matter in venturi tube.	Clean out the venturi tube.
	The propane regulator is in a “low flow” state.	Ensure the lighting procedure is followed carefully.All valves must be in the off position when the tank valve is turned on.Turn tank on slowly to allow pressure to equalize.See the Lighting Instructions in the Operating section.