9	Z X 4	M6x15mm 6 X 8	M8x15mm 4 X 4	M8 5 X 4	10 X 1	11 X 1

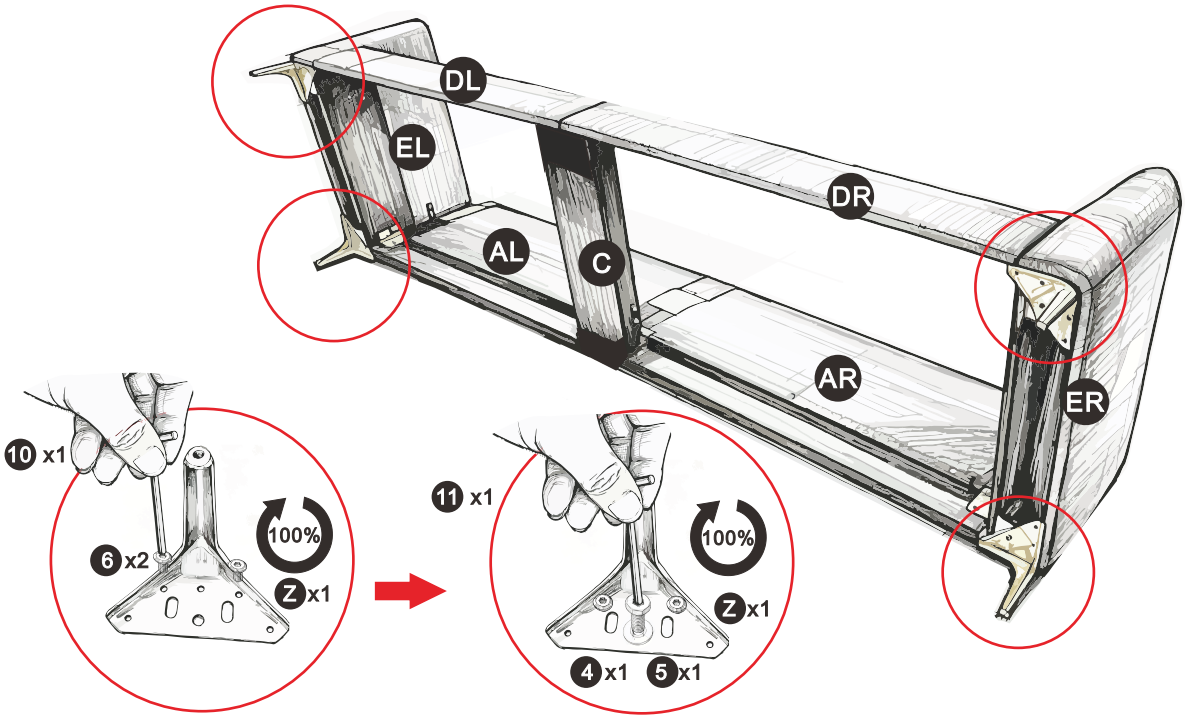

10	Z X 2	M6x15mm 6 X 7	10 X 1

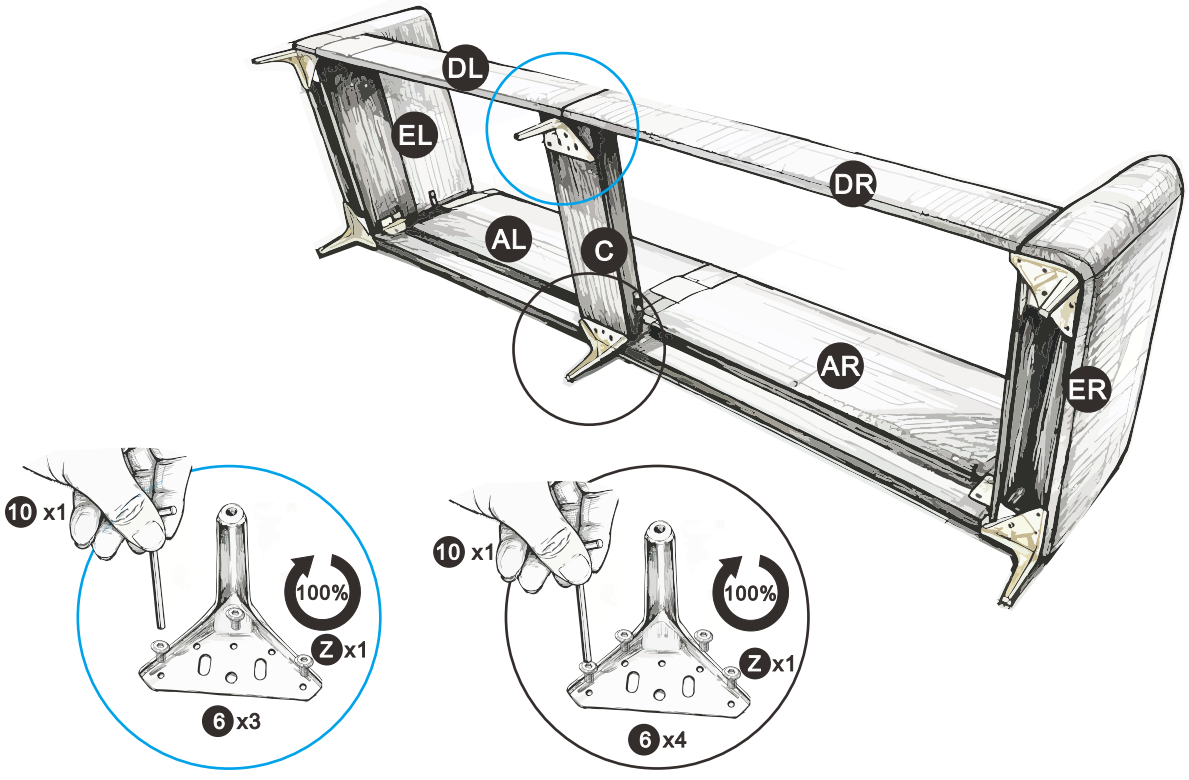

11	M6x40mm  8 X 12	 10 X 1

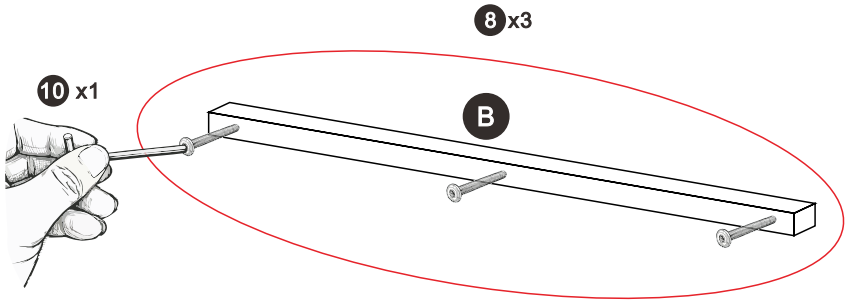

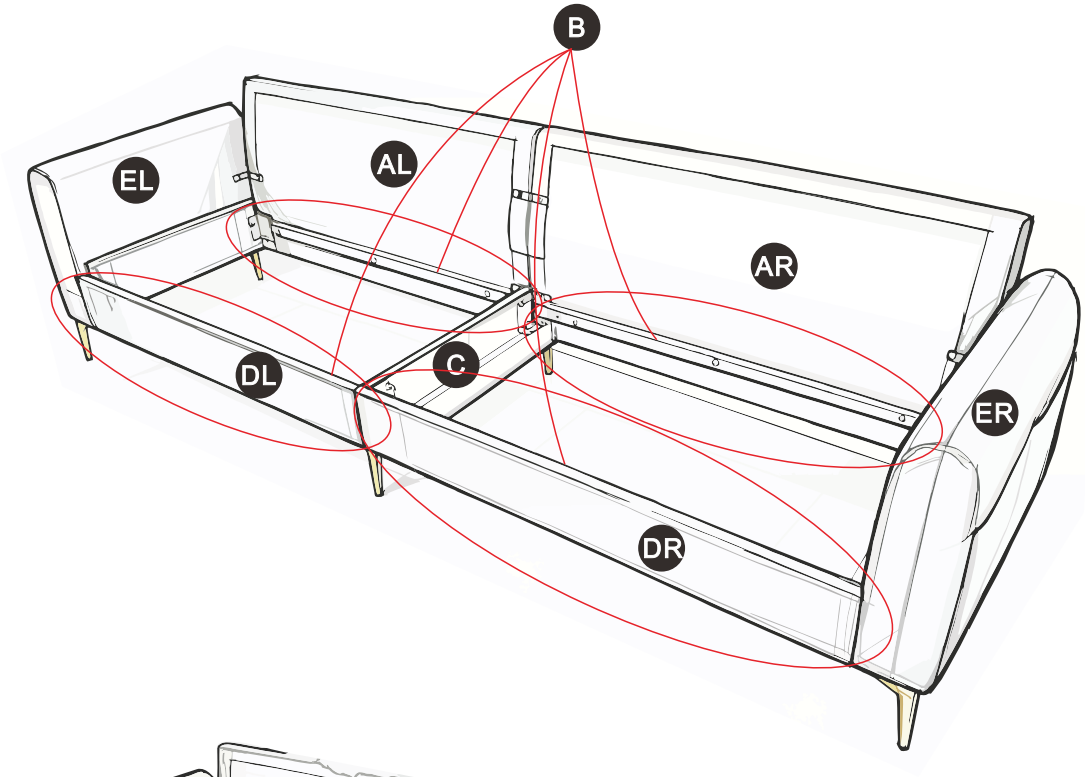

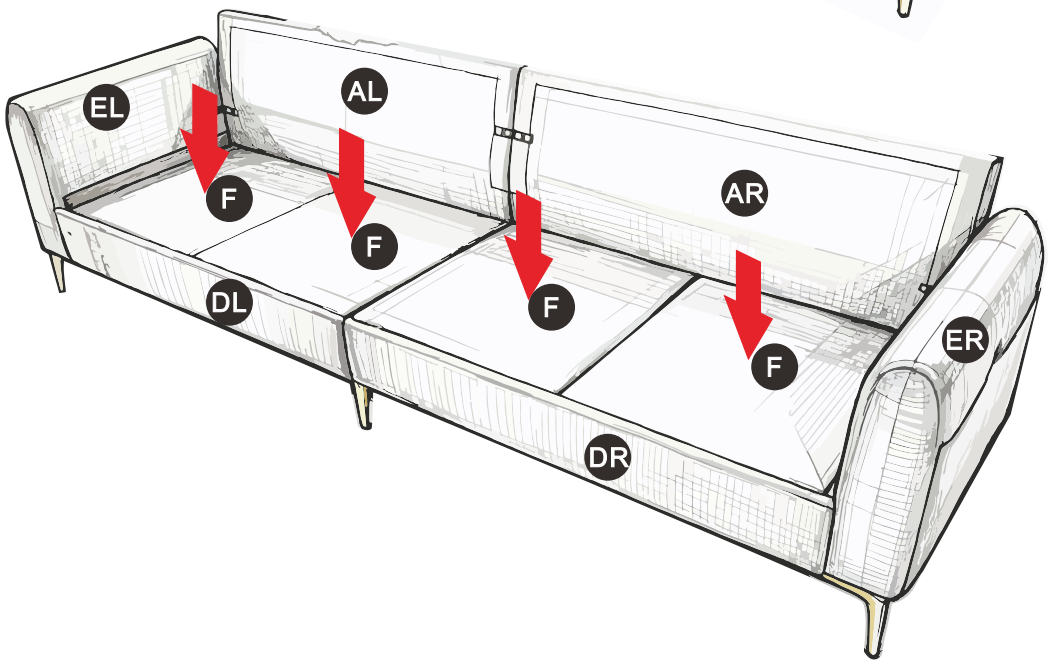

12

Z X 8	M6x15mm 6 X 16	M8x15mm 4 X 8	M8 5 X 8	10 X 1	11 X 1

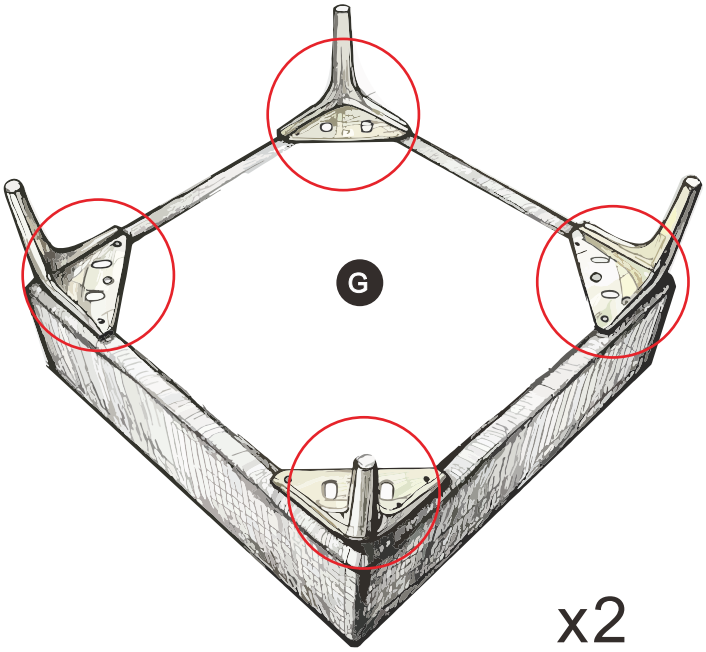

x2

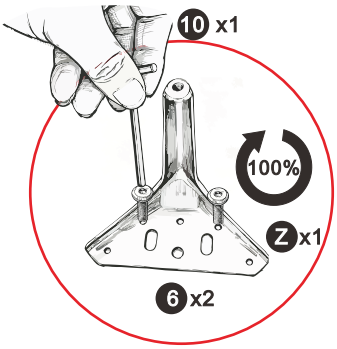

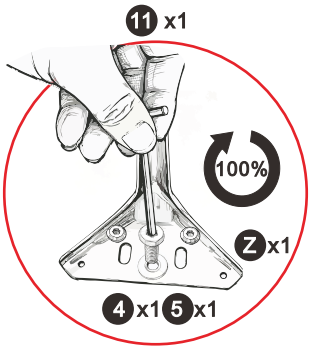

13

M6x40mm 8 X 8	10 X 1

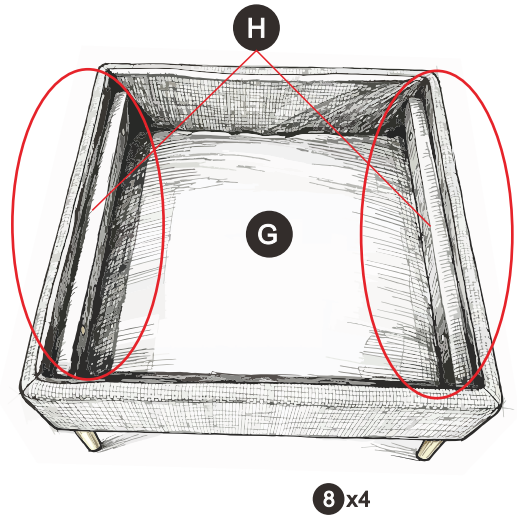

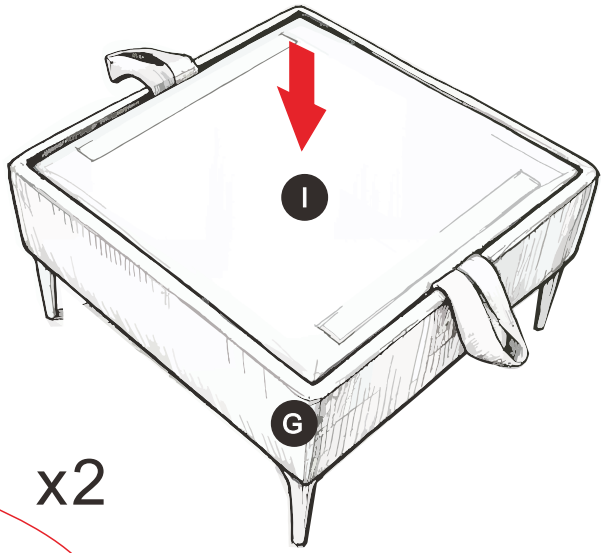

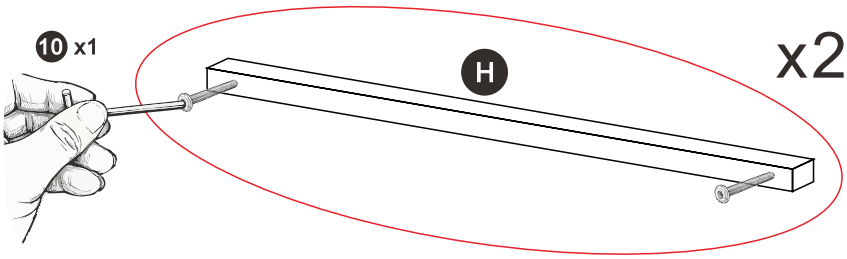

x2

14

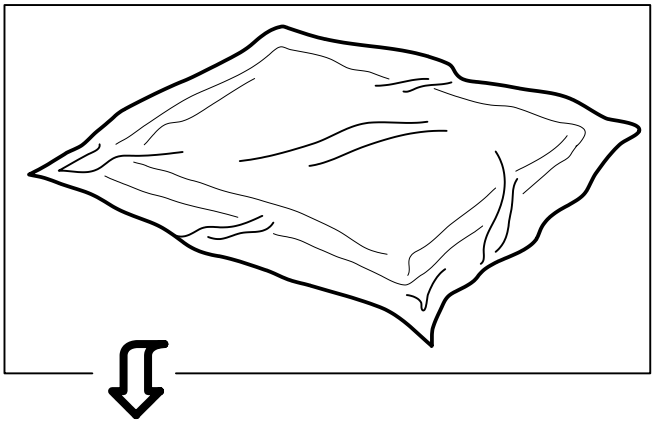

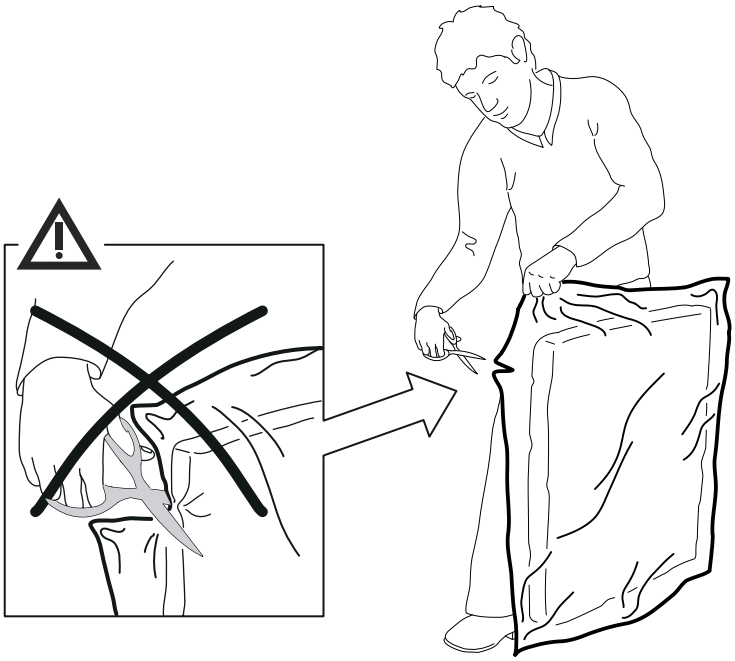

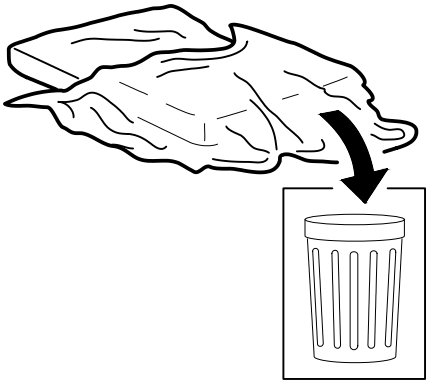

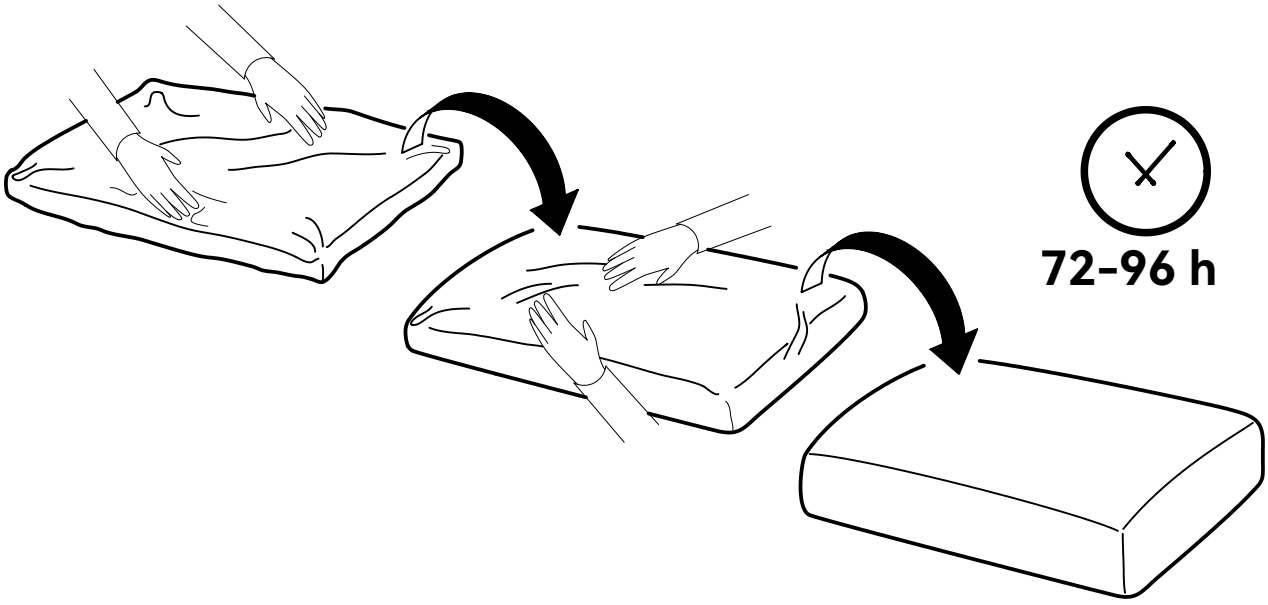

15

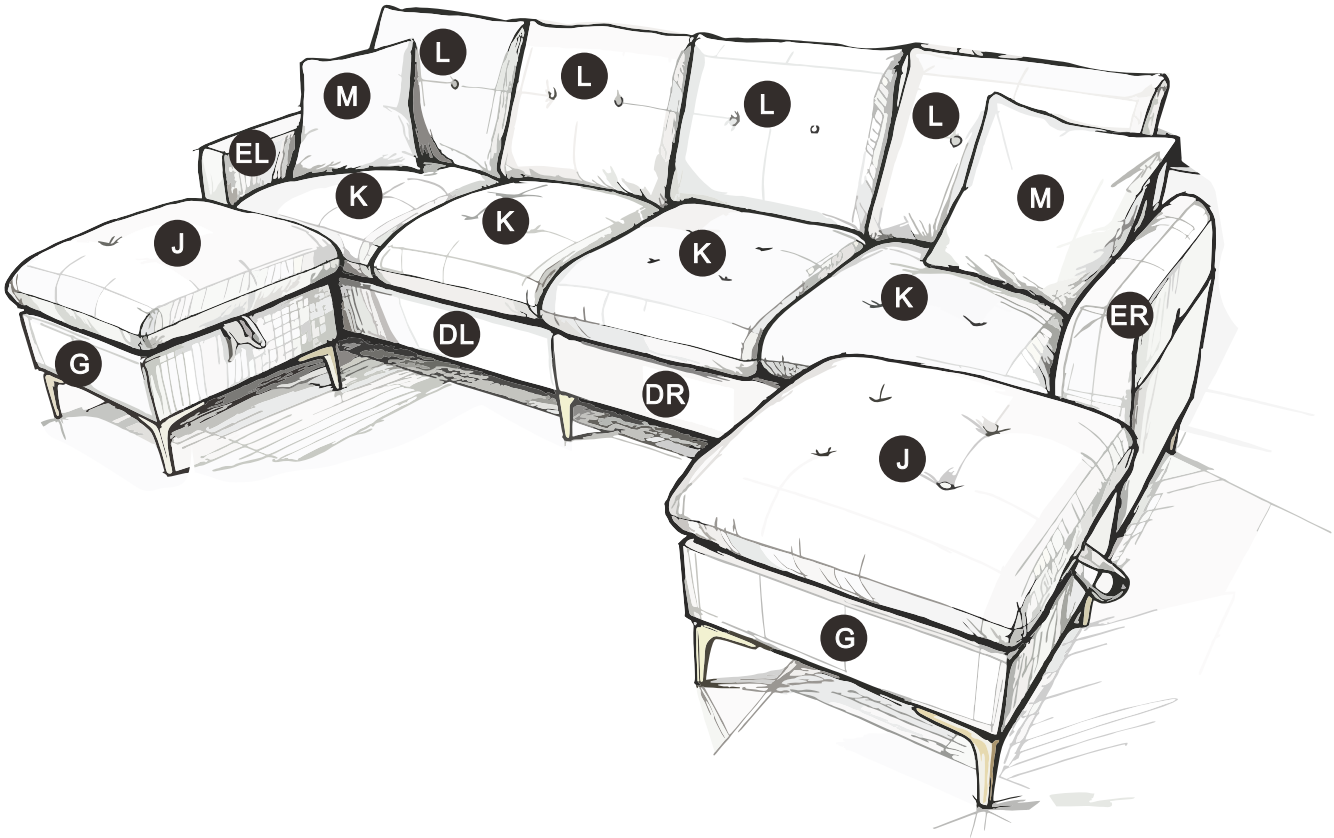

16

