Installation & Assembly

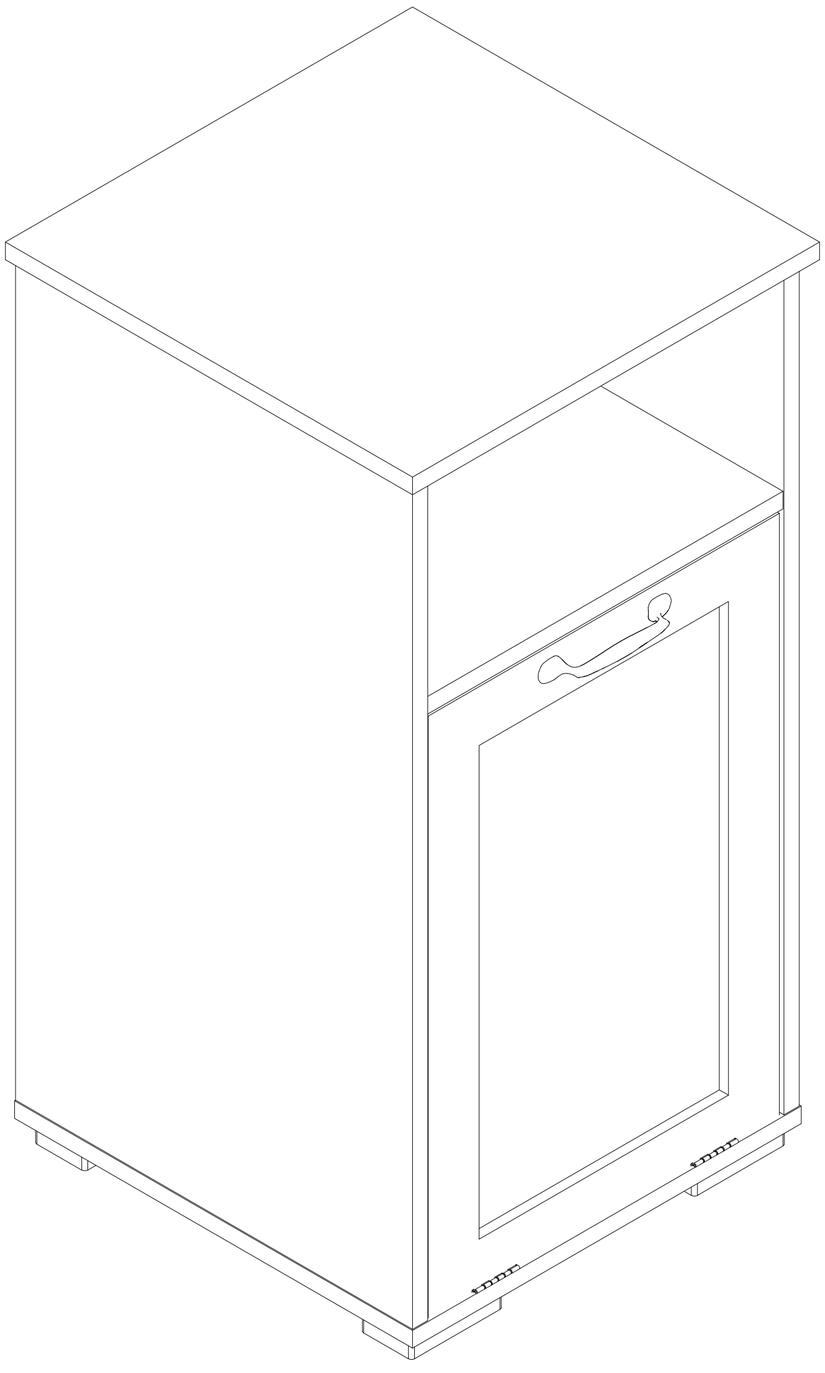

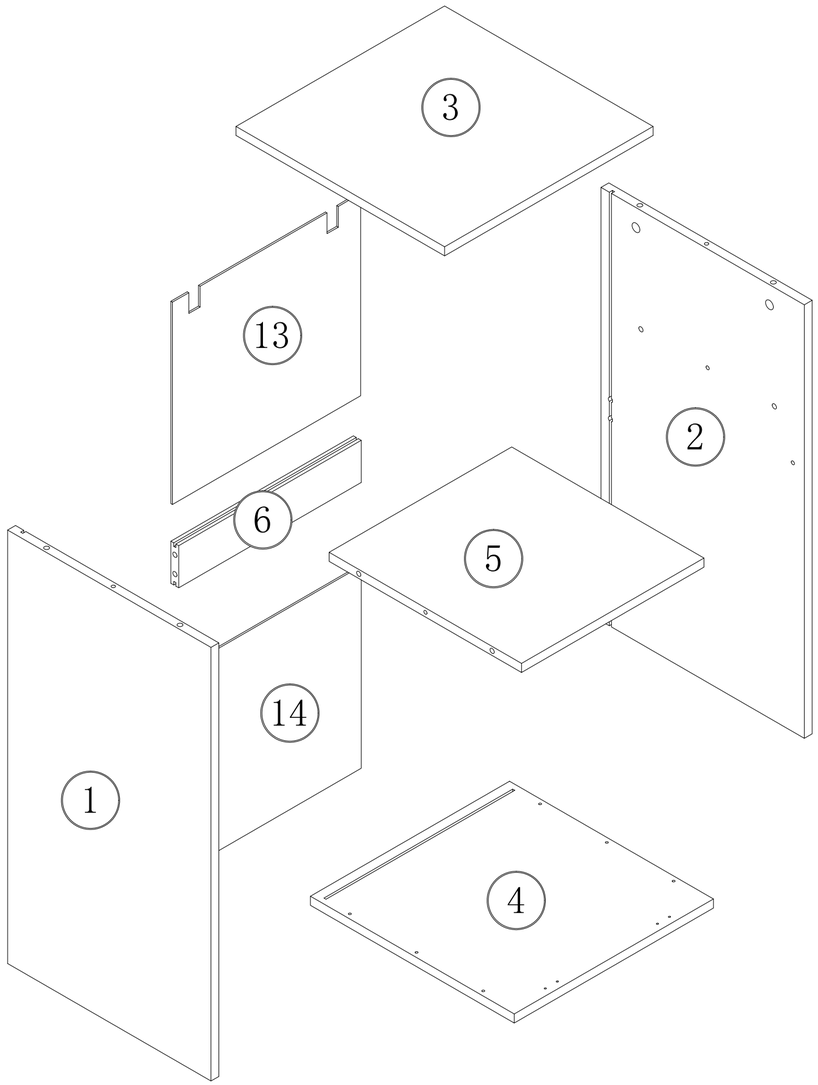

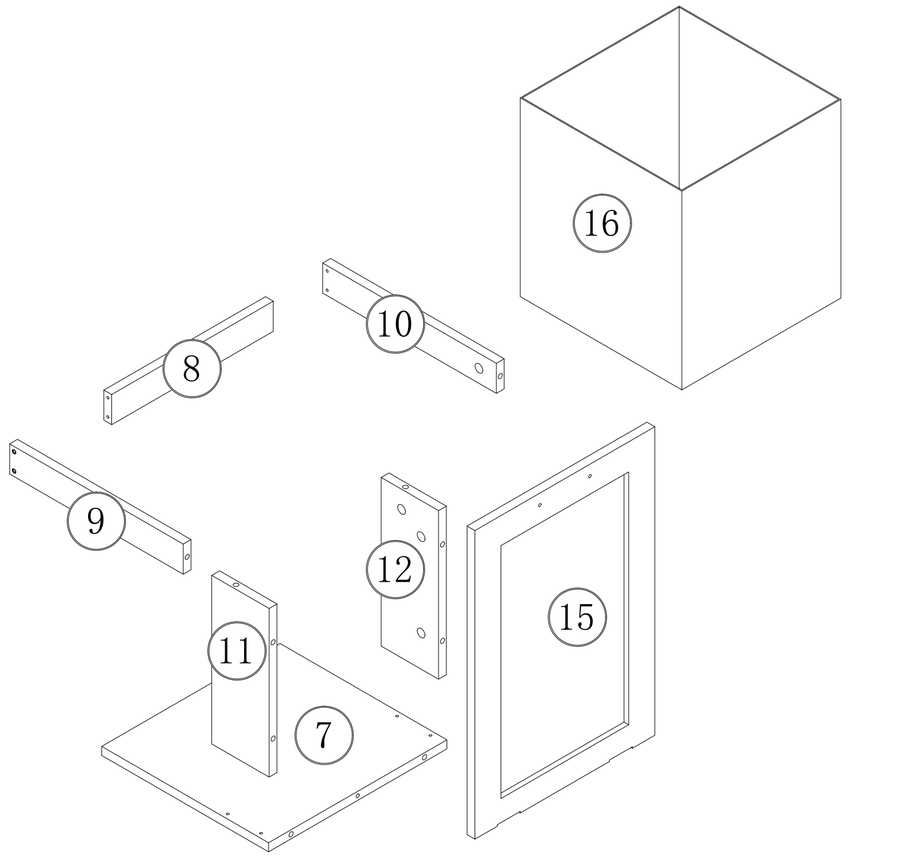

K	L	M 3.5*25	N	O	P 8*40	Q 4*50	R	
2PCS	4PCS	8PCS	2PCS	2PCS	2PCS	2PCS	8PCS	
A	B	C 8*40	D 7*50	E	F 3*12	G 3.5*14	H 3.5*35	I 96mm	J 4*18
22PCS	22PCS	5PCS	10PCS	6PCS	6PCS	+2PCS 10PCS	4PCS	1PCS	2PCS

1 720*390(mm) 28.35*15.35(inch) 1PC 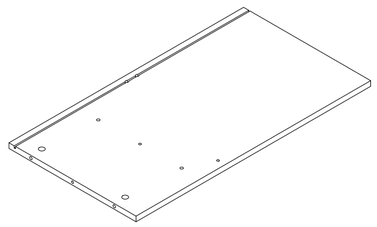	2 720*390(mm) 28.35*15.35(inch) 1PC 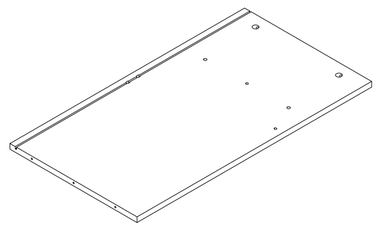	3 400*400(mm) 15.75*15.75(inch) 1PC 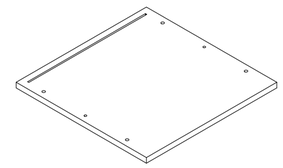	4 382*391(mm) 15.04*15.39(inch) 1PC 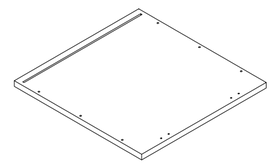	5 350*369(mm) 13.78*14.53(inch) 1PC 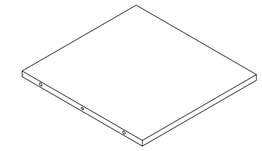
6 350*70(mm) 13.78*2.76(inch) 1PC 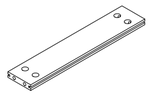	7 320*342(mm) 12.6*13.46(inch) 1PC 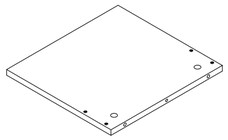	8 310*50(mm) 12.2*1.97(inch) 1PC 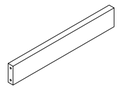	9 333*50(mm) 13.11*1.97(inch) 1PC 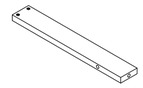	10 333*50(mm) 13.11*1.97(inch) 1PC 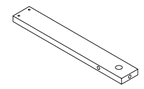
11 280*110(mm) 11.02*4.33(inch) 1PC 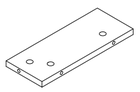	12 280*110(mm) 11.02*4.33(inch) 1PC 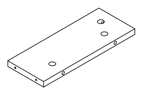	13 336*361(mm) 13.23*14.21(inch) 1PCS 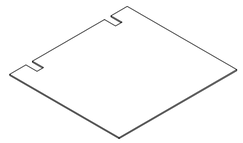	14 336*361(mm) 13.23*14.21(inch) 1PCS 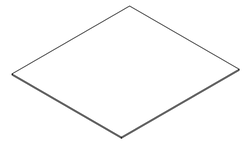	15 510*345(mm) 20.08*13.58(inch) 1PC 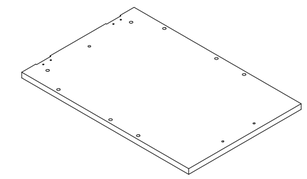
16 305*310*330(mm) 12*12.2*13(inch) 1PC 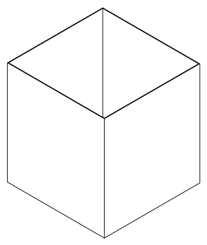				

Hardware installation demonstration

NOTE:Please make sure "A"hardware tightened and can't be pulled out!

I

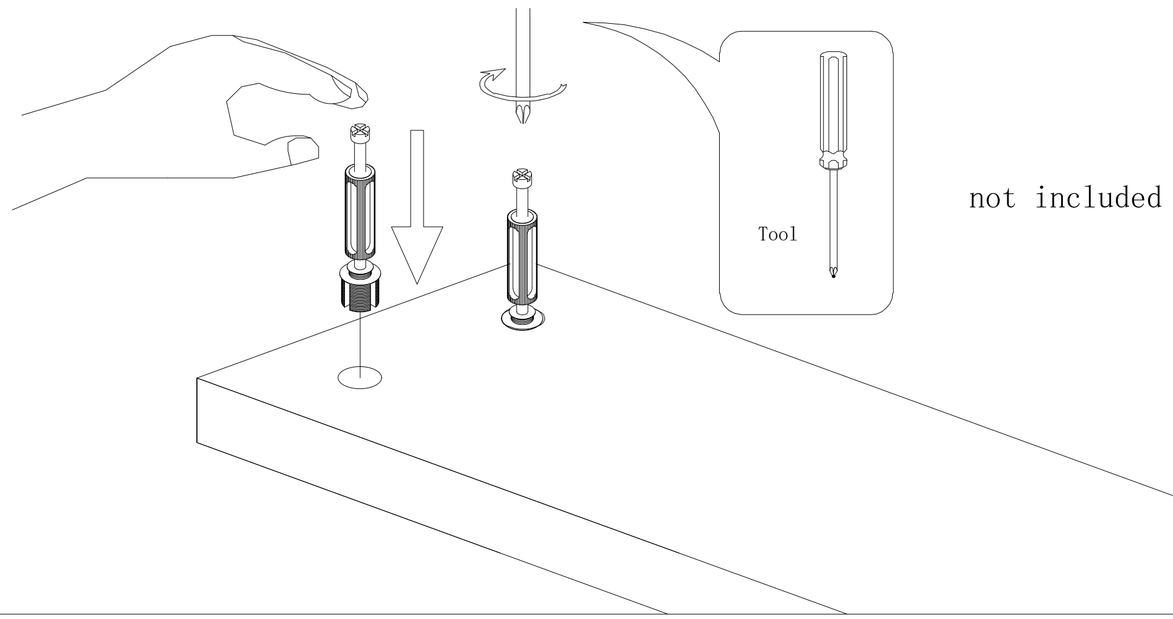

not included

II

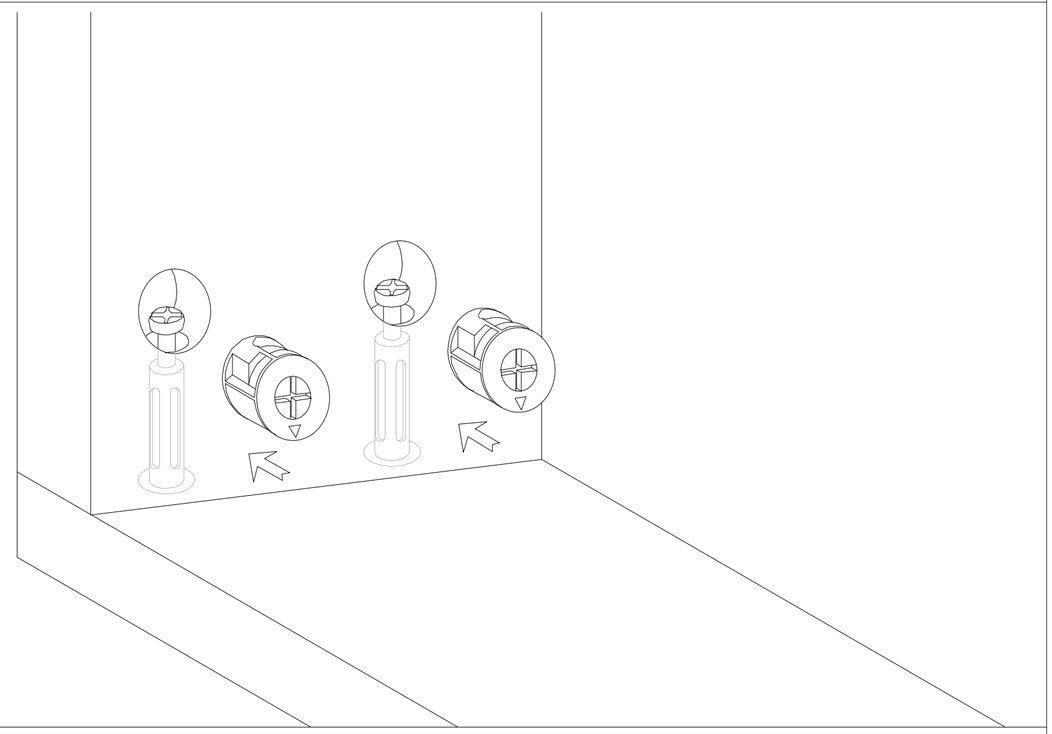

III

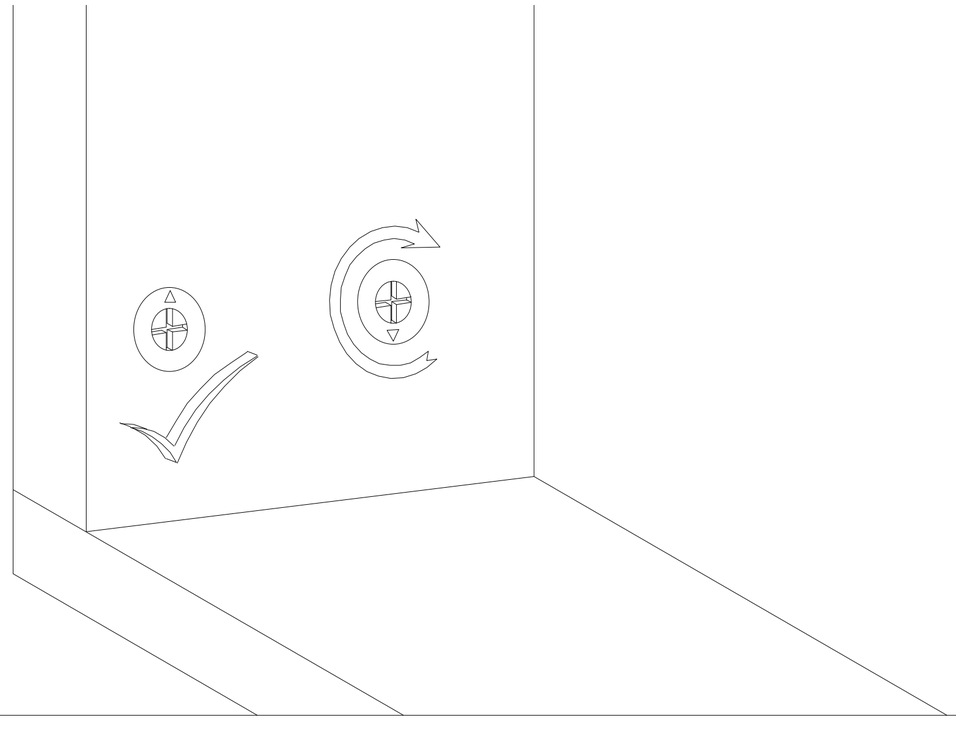

1

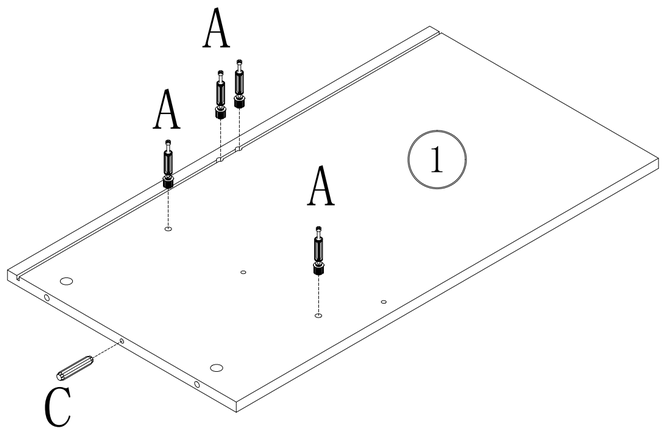

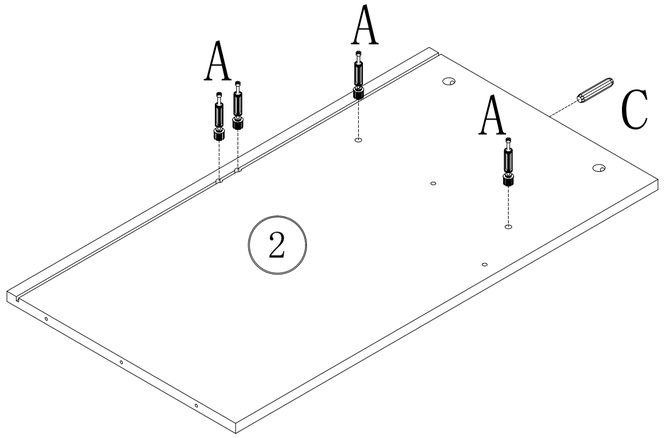

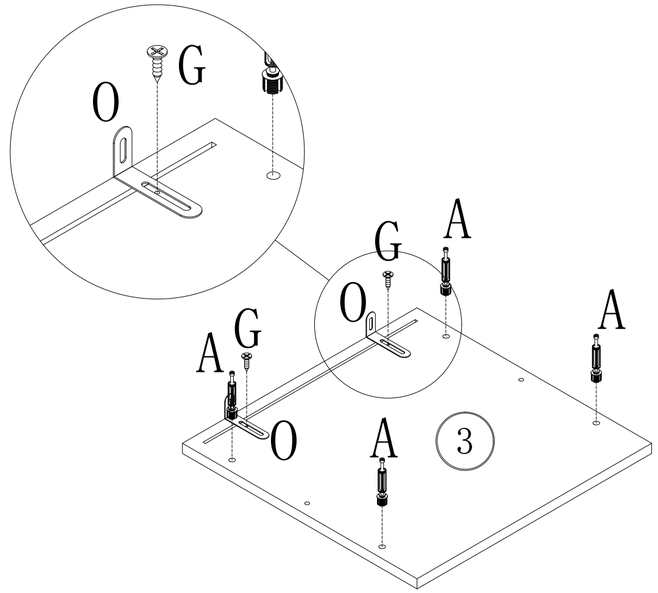

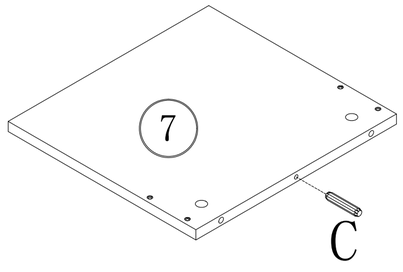

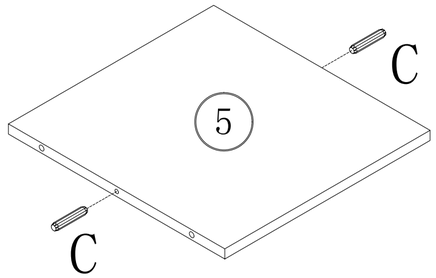

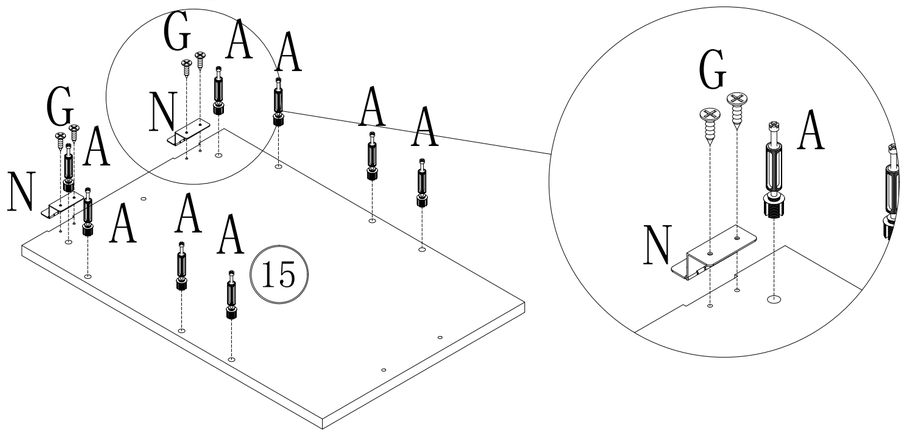

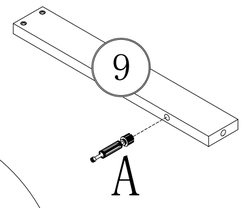

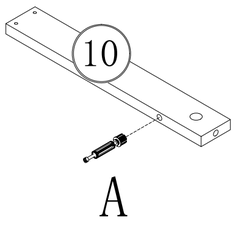

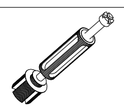	A*22		
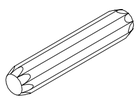	C*5	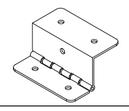	N*2
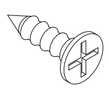	G*6		O*2

put A on board ① ② ③ ⑨ ⑩ ⑮

put C on board ① ② ⑤ ⑦

2

Make sure the arrow on the screw align to the hole on the side.

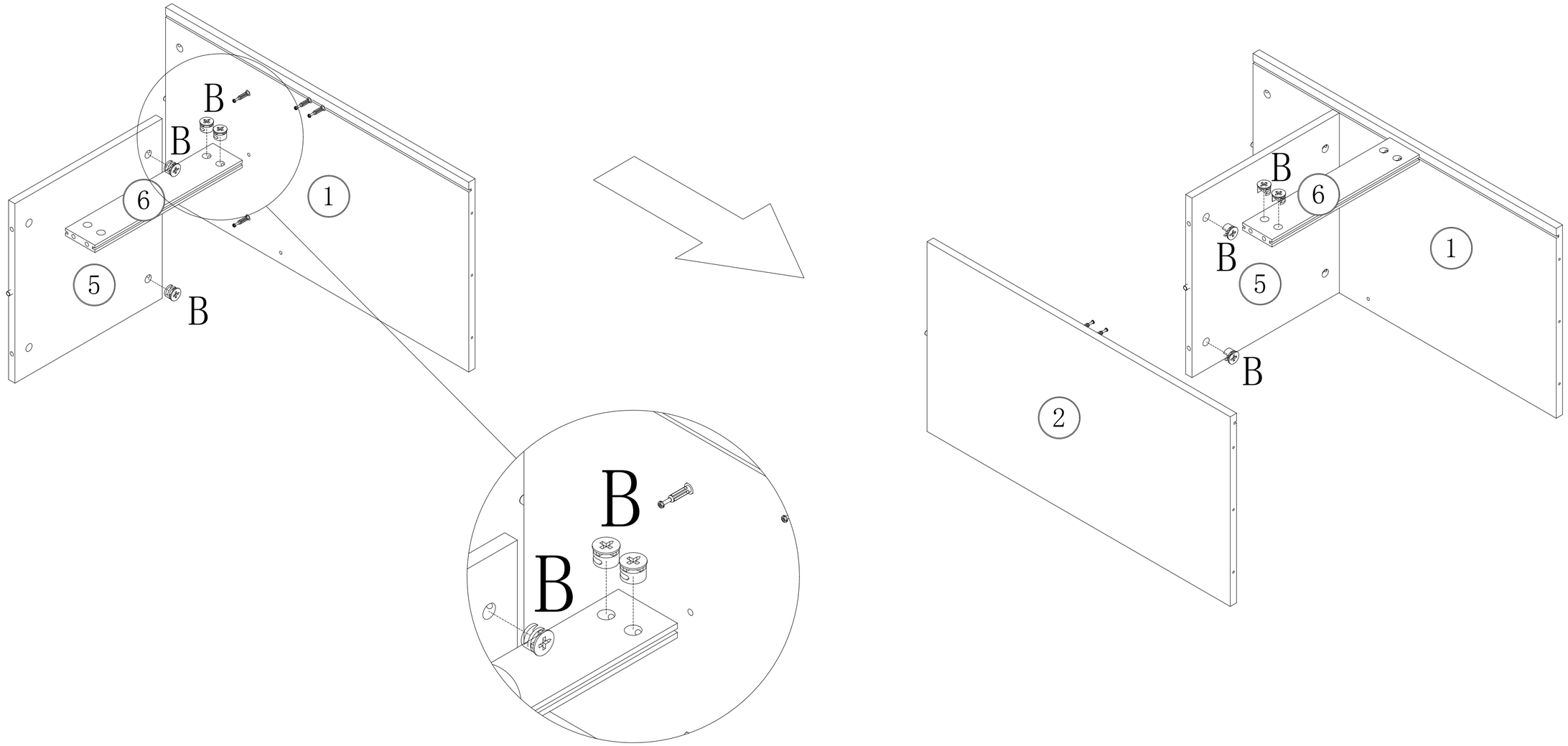

	B*8

put B on board 5 6

3

Make sure the arrow on the screw align to the hole on the side.

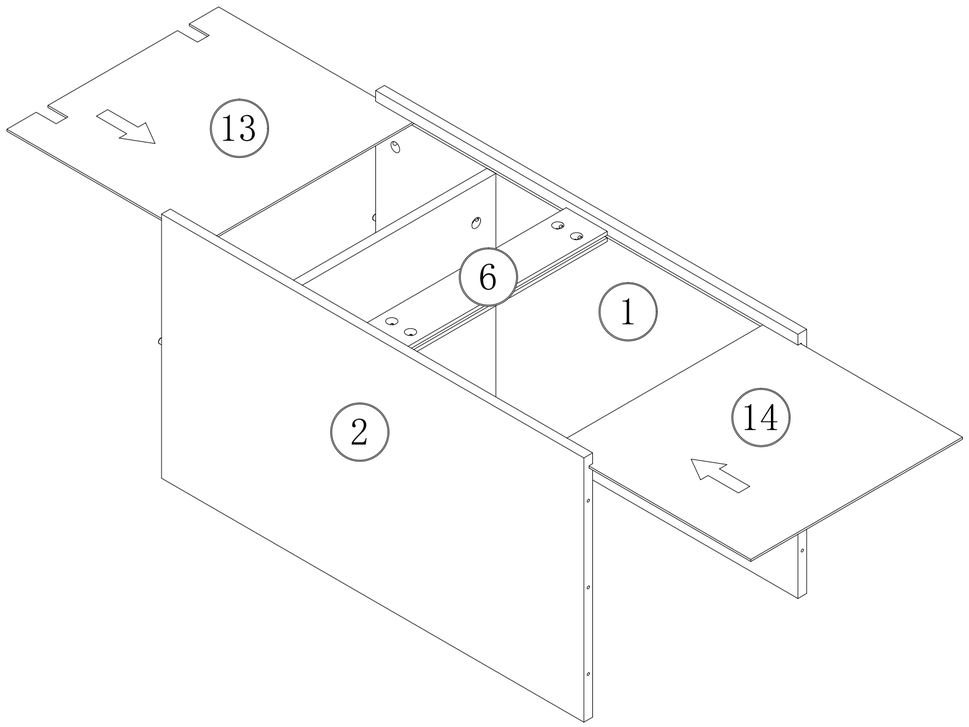

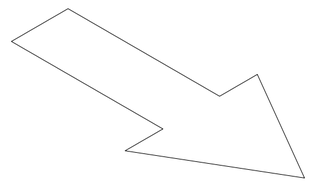

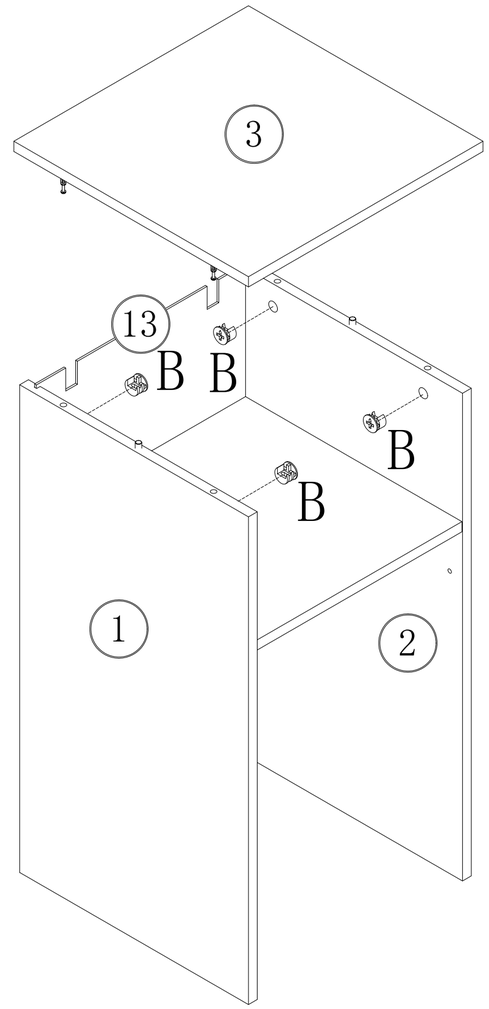

	B*4

put B on board 1 2

4

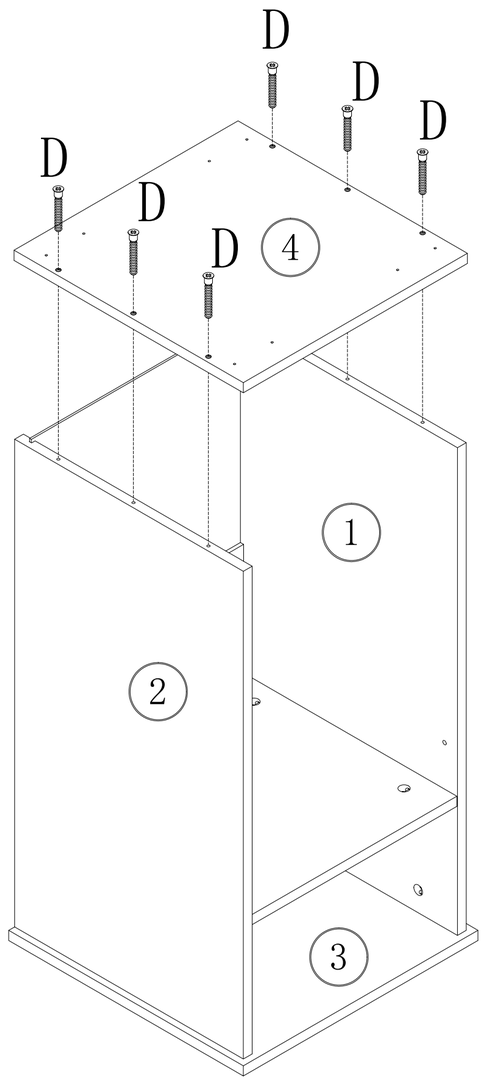

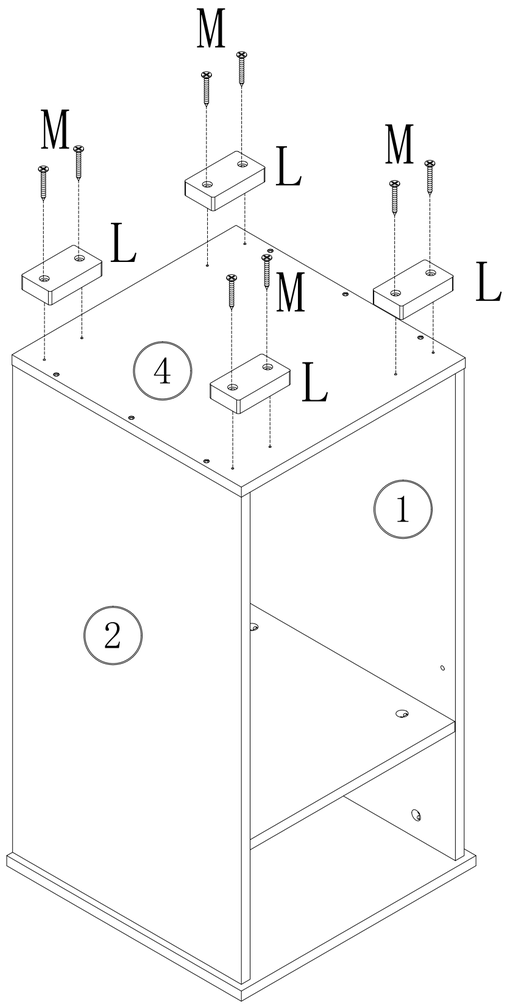

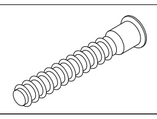	D*6		
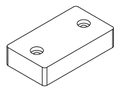	L*4		M*8

5

Make sure the arrow on the screw align to the hole on the side.

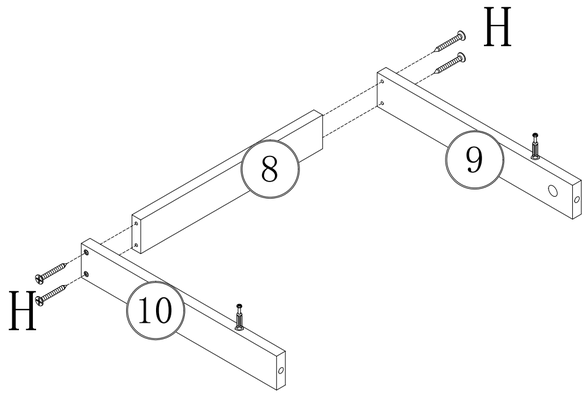

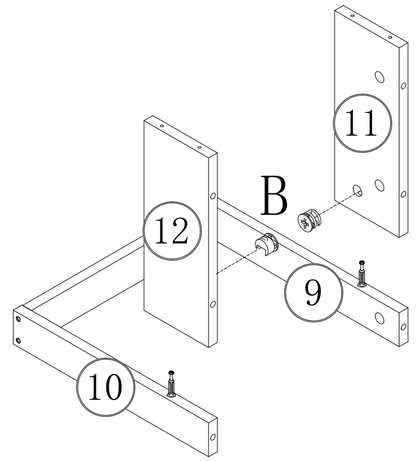

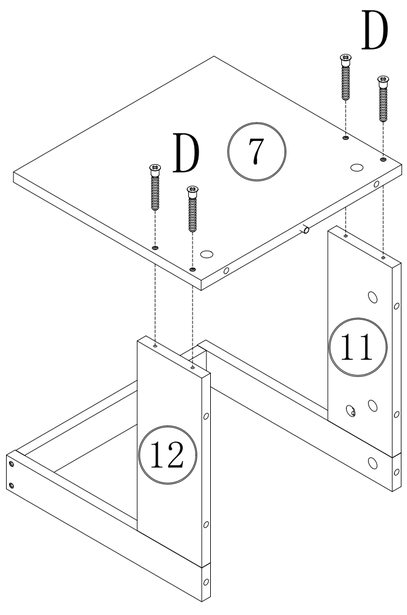

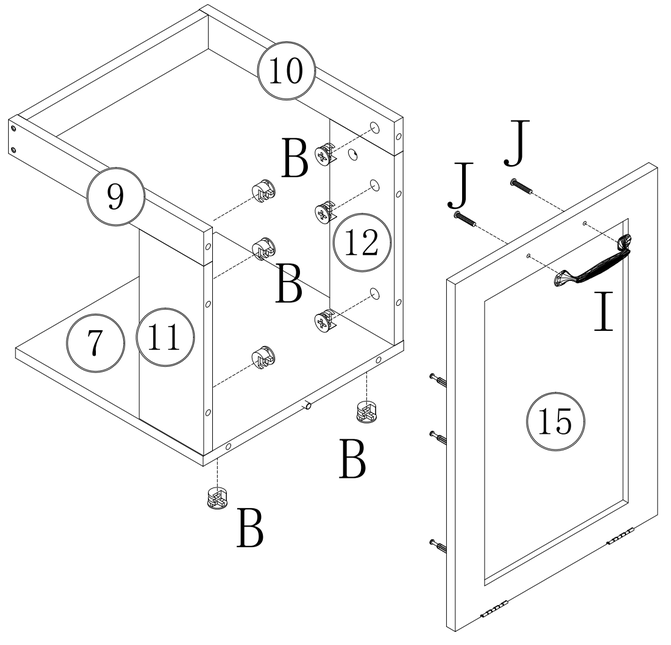

	B*10		
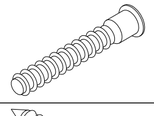	D*4	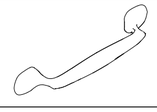	I*1
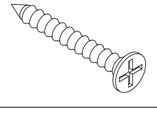	H*4	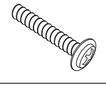	J*2

6

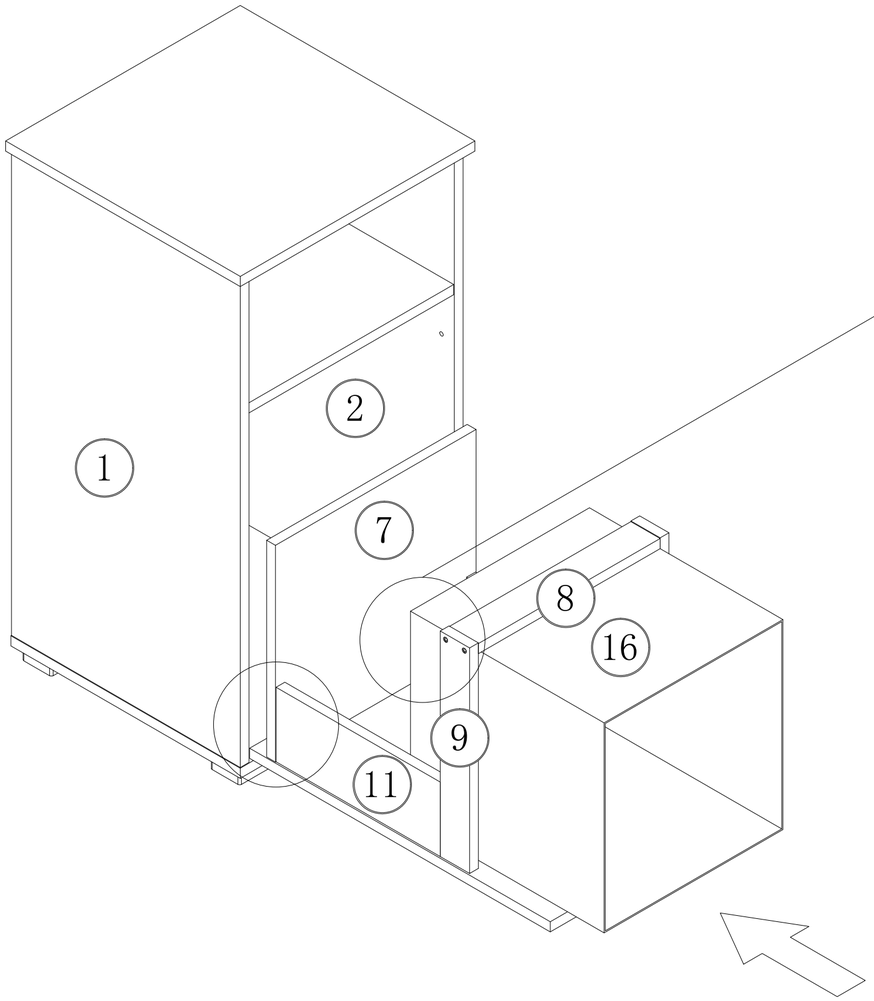

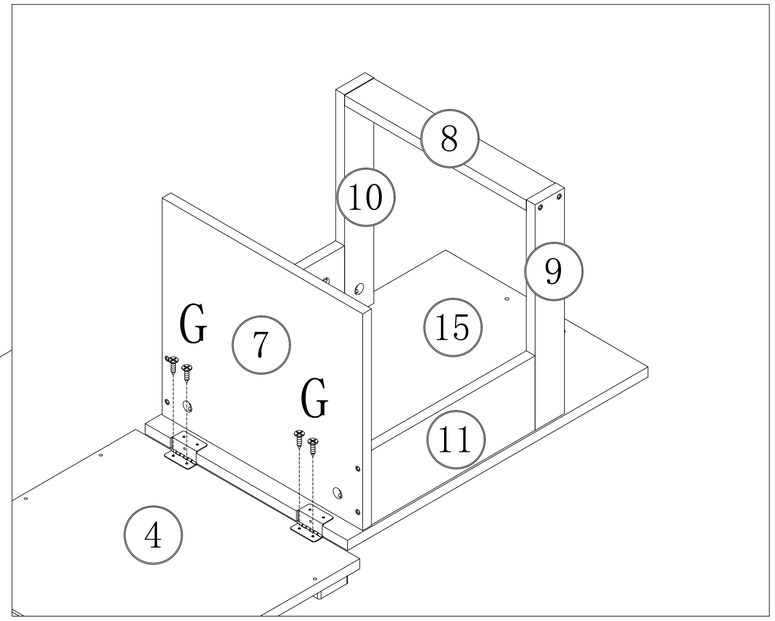

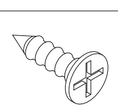	G*4

7

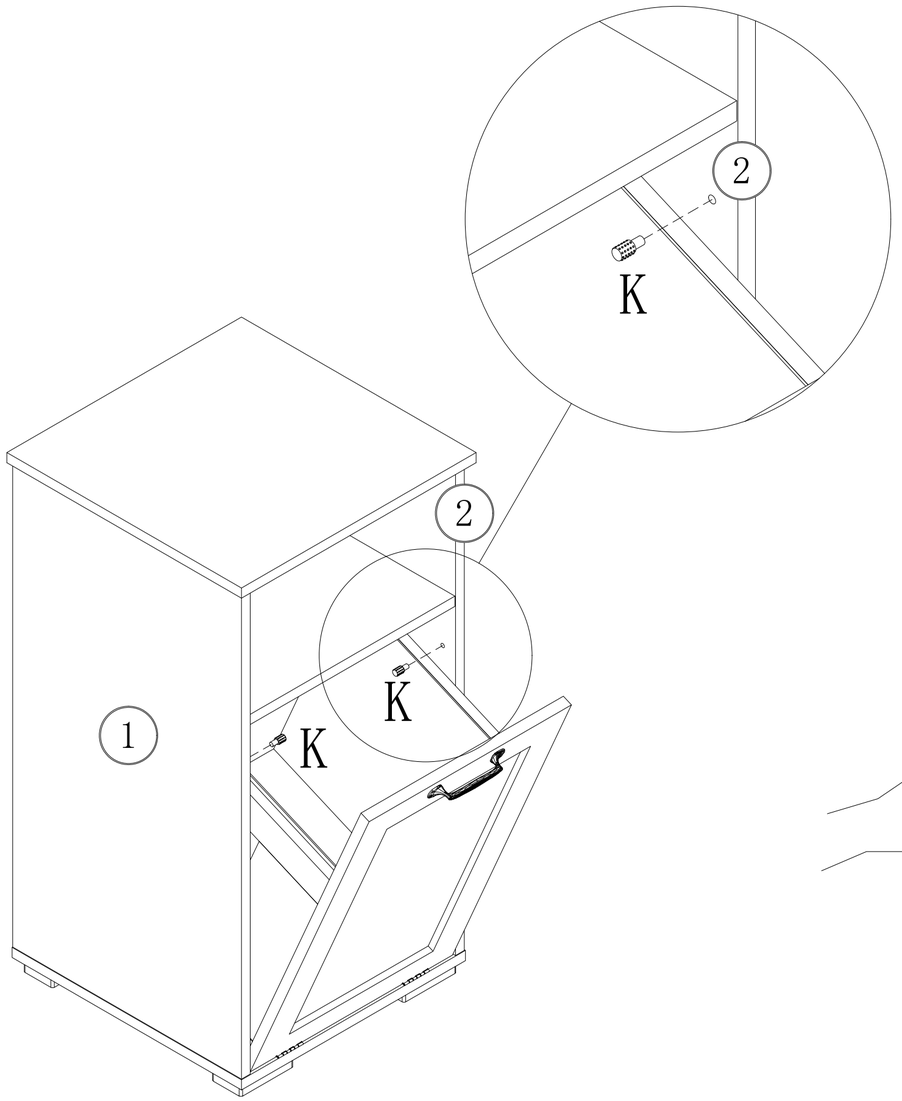

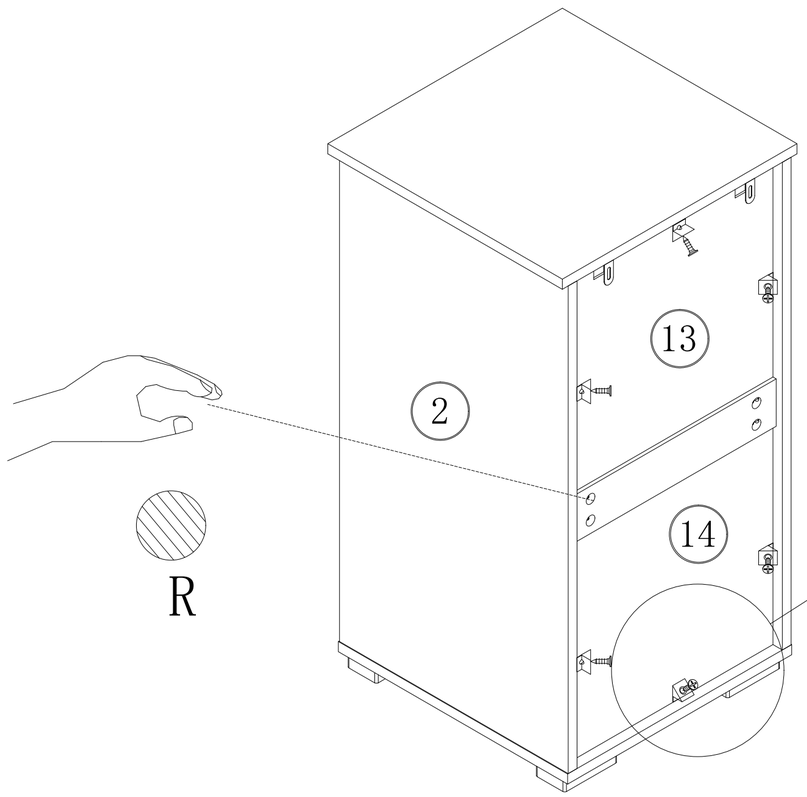

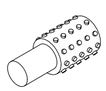	K*2		E*6
	R*8	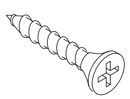	F*6

8

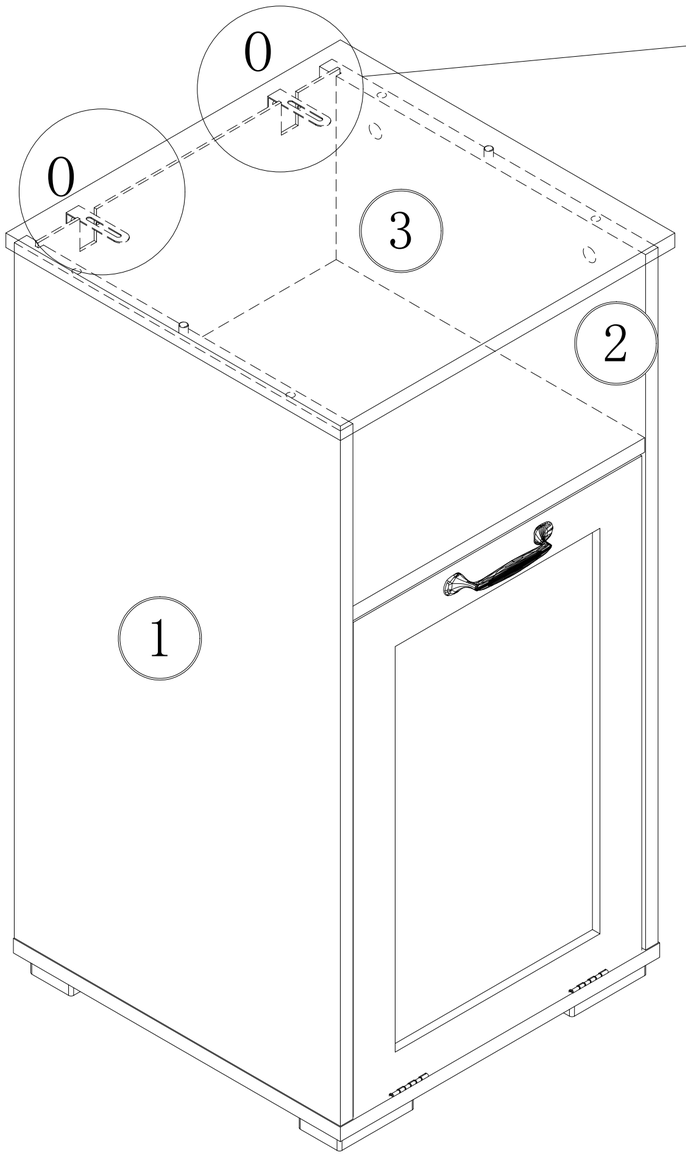

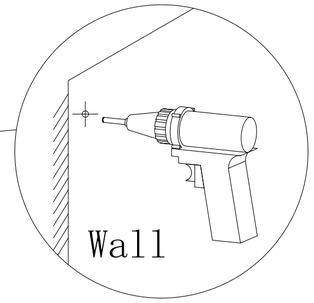

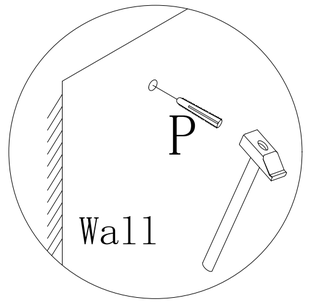

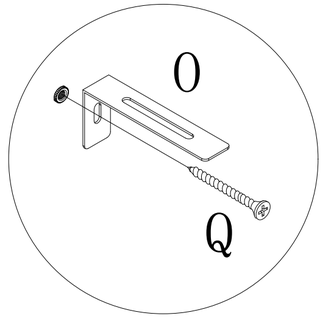

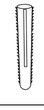	P*2
	Q*2

9

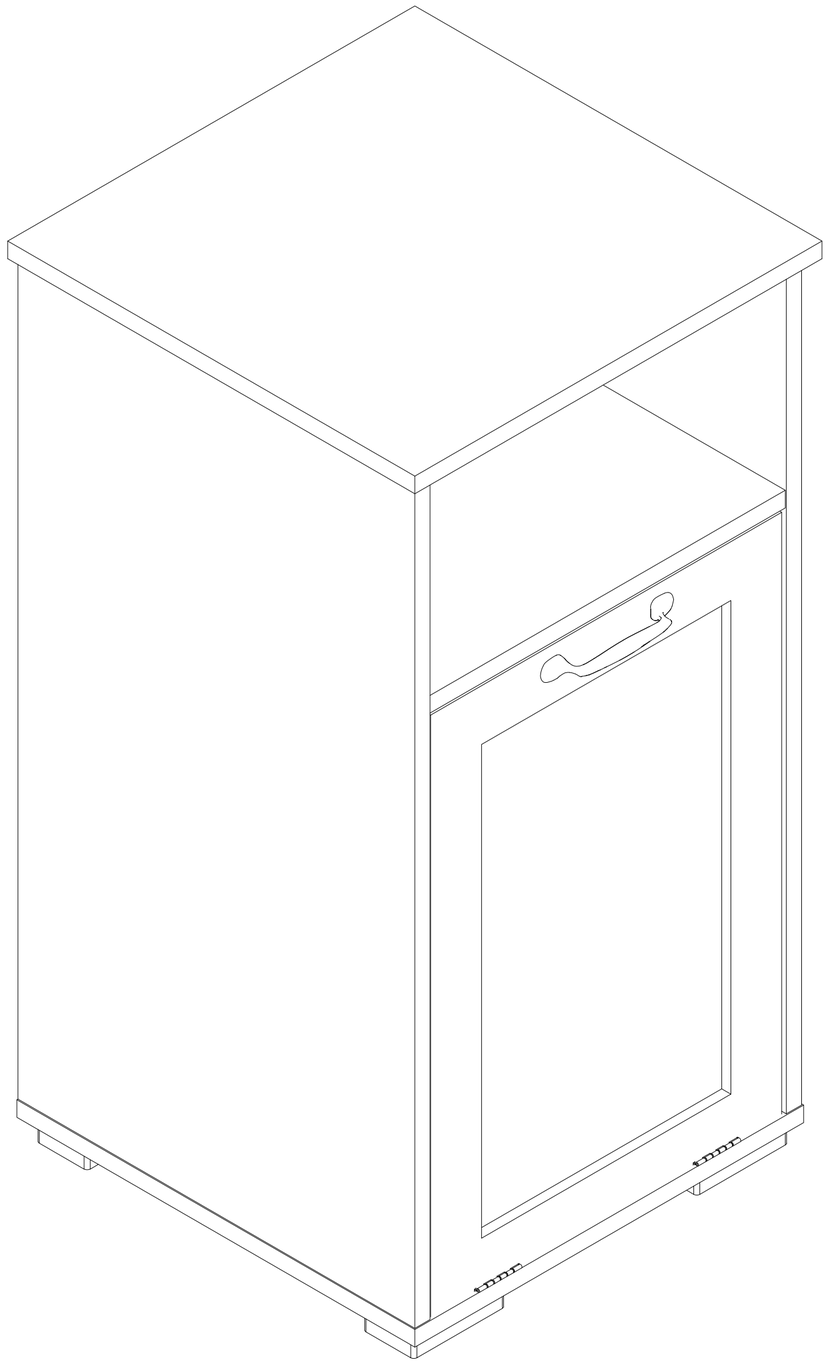

END