AXOR

AXOR Montreux
Toilet brush holder wall-mounted
Surfaces: **Brushed Nickel** Article Number: **42035820**

product features

- wall-mounted
- material: metal
- material recess: matt glass
- with removable insert
- with mounting material
- concealed fastening
- drilling distance 35 mm
- diameter drill hole: 6 mm

Product image

Scale drawing

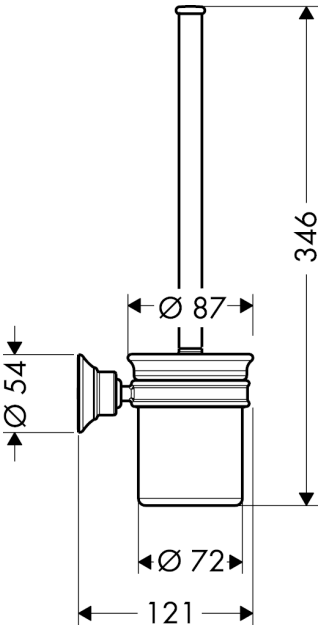

AXOR

AXOR Montreux
Toilet brush holder wall-mounted
Surfaces: **Brushed Nickel** Article Number: **42035820**

Exploded Drawing

Year of production: **>05/06**

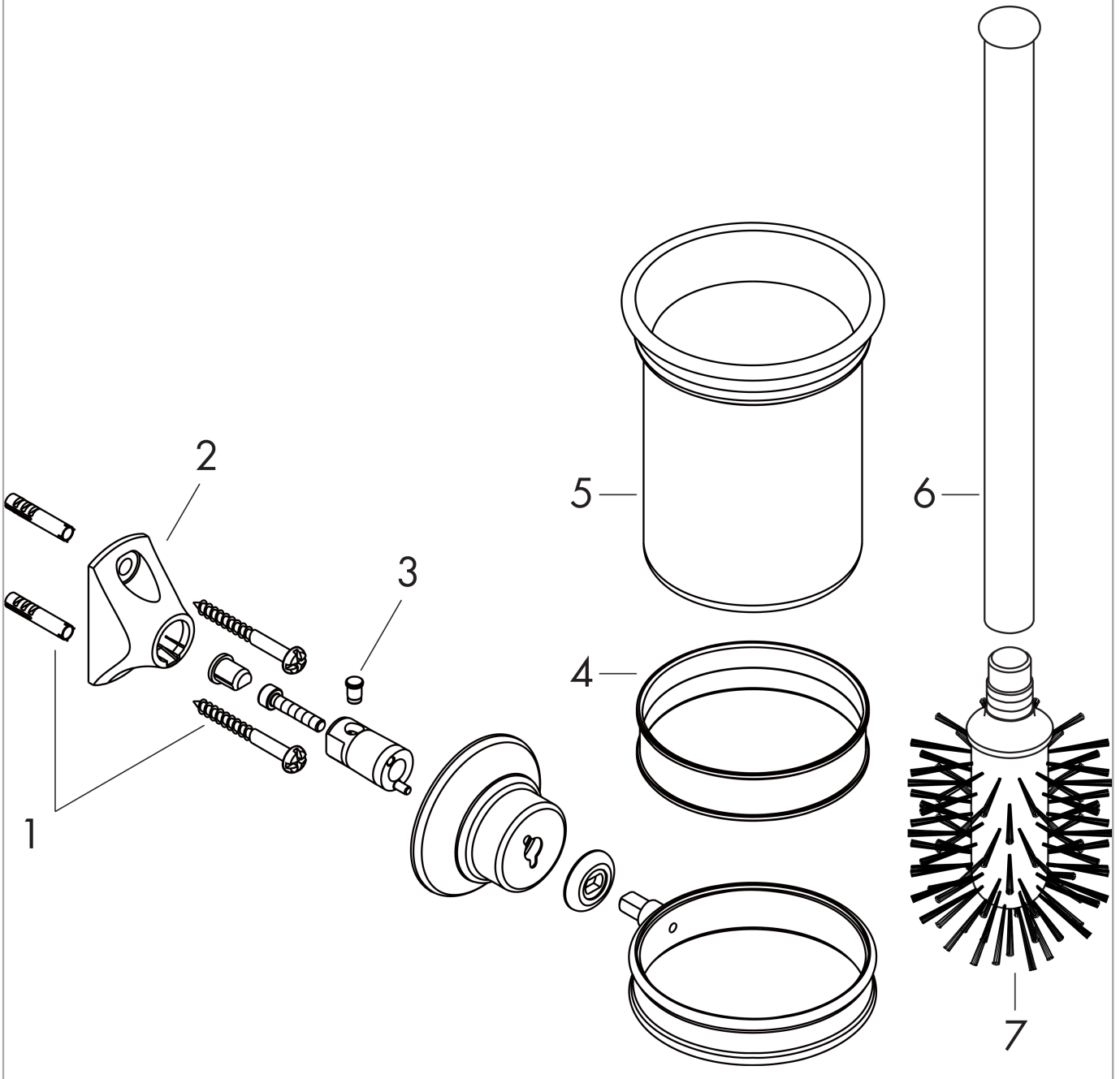

AXOR

AXOR Montreux
Toilet brush holder wall-mounted
Surfaces: **Brushed Nickel** Article Number: **42035820**

Spare part list

Year of production: **>05/06**

Pos.		Article Number	Price	PU
1	mounting set	40915000	-	1
2	support element	96341000	-	1
3	pin	97546000	-	1
4	plastic ring	98726000	-	1
5	cup	42094000	-	1
6	stick with brush	40089820	-	1
7	WC-brush white	40088000	-	1