Installation & Assembly

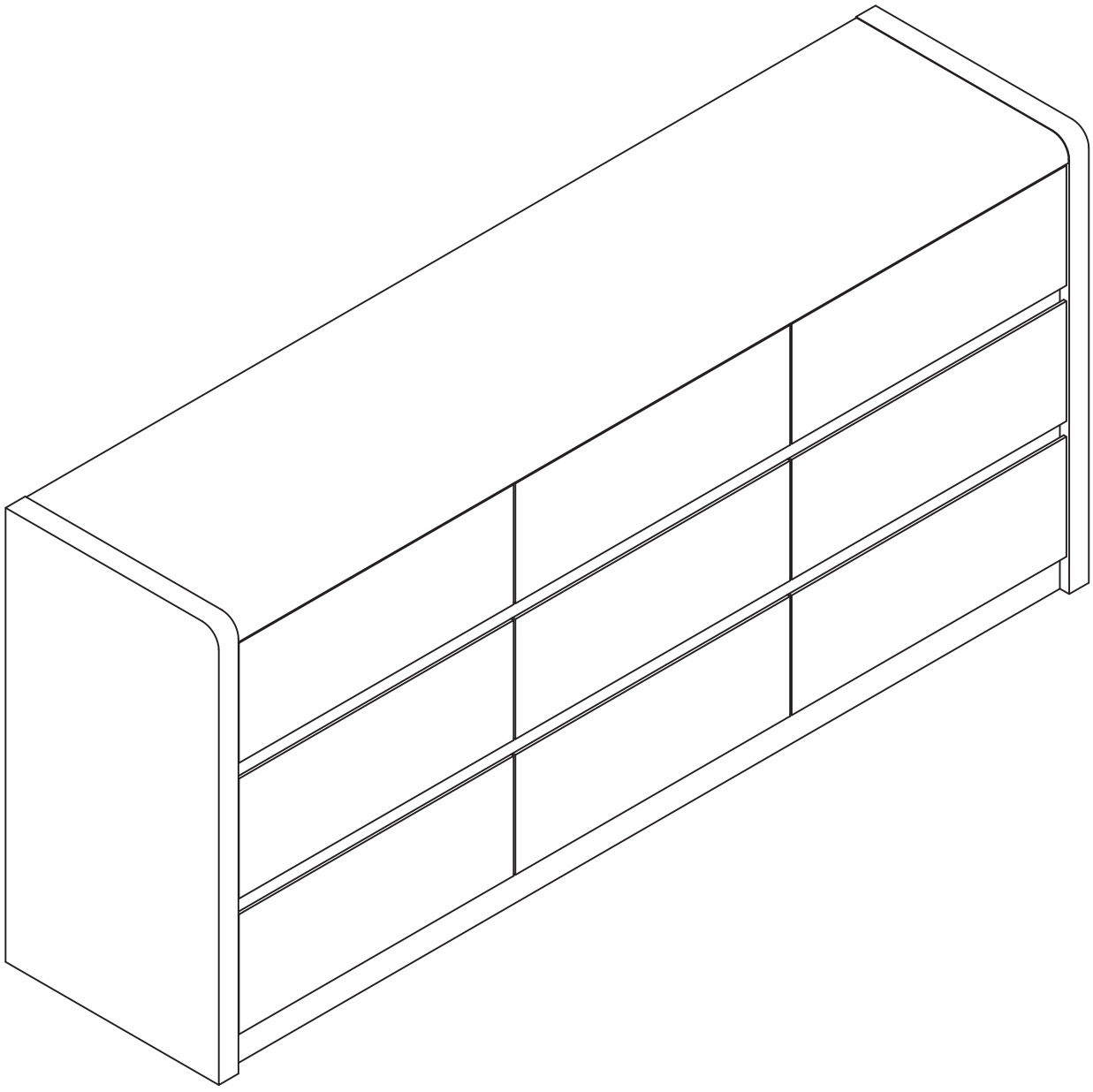

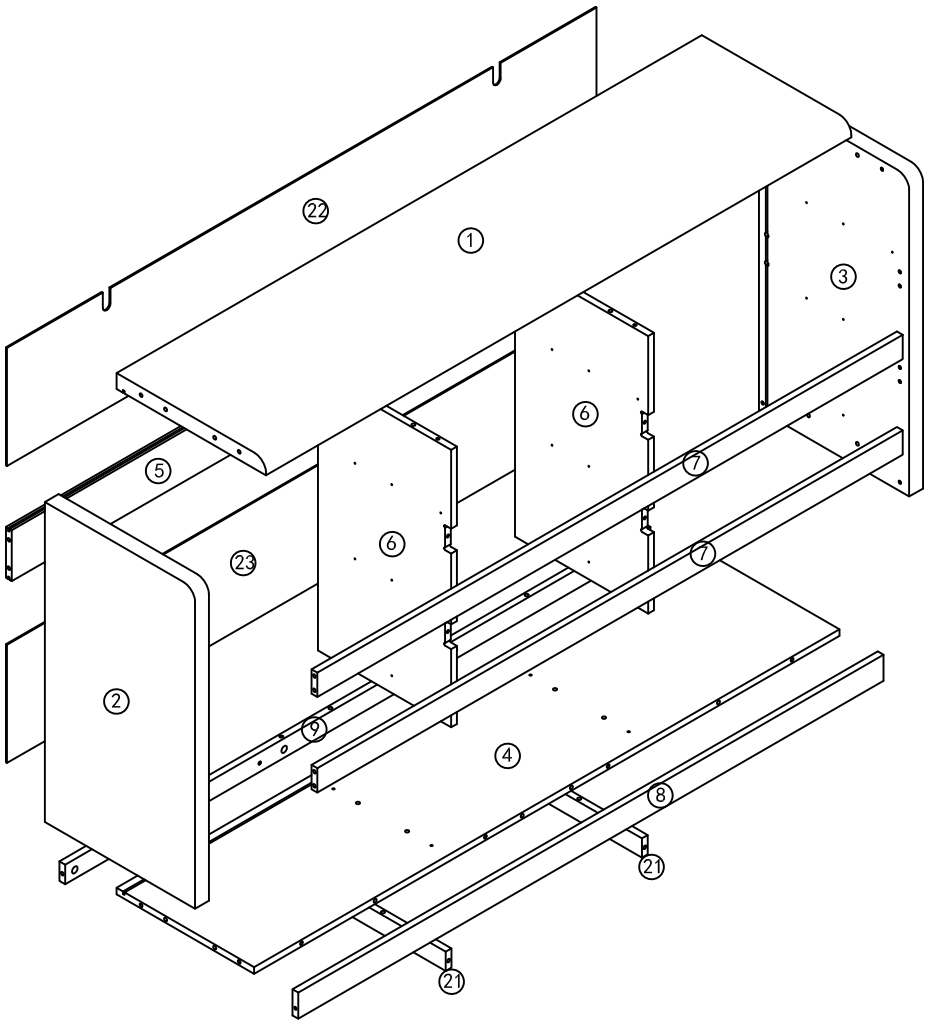
22
1
3
6
5
7
6
23
7
2
9
4
8
21
21

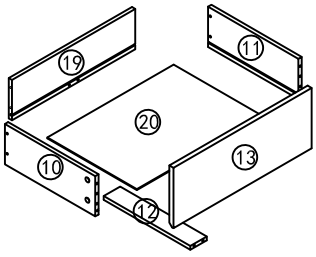
19
11
20
10
13
12

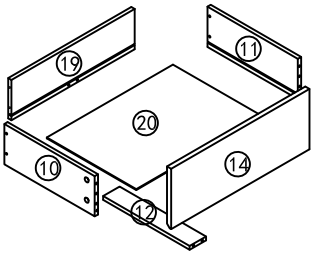
19
11
20
10
14
12

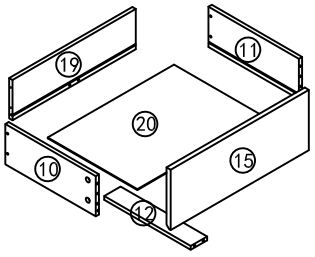
19
11
20
10
15
12

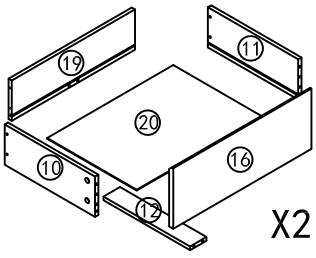
19
11
20
10
16
12

X2

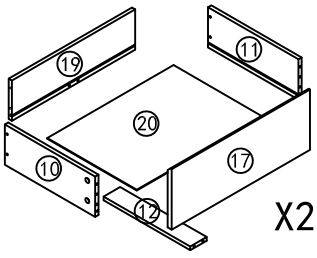
19
11
20
10
17
12

X2

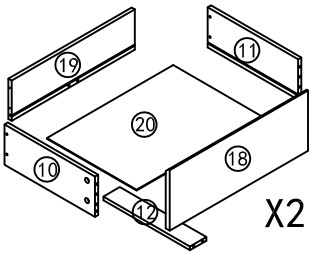
19
11
20
10
18
12

X2

A 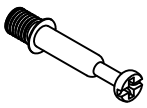 89+2PCS	B  89+2PCS	C 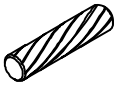 Ø8*30MM 28+2PCS	D 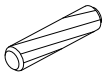 Ø6*30MM 36+2PCS
E  M4*30MM 53+2PCS	F 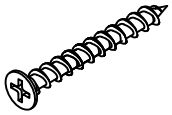 M4.2*50MM 4+1PCS	G  M3.5*12MM 72+2PCS	H  M4*40MM 2PCS
I  20+2PCS	J  M3*16MM 20+2PCS	K  8+1PCS	L 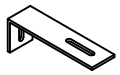 2PCS
M 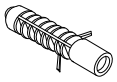 2PCS	N  Ø4*15MM 2PCS	O 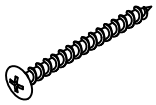 Ø4*35MM 2PCS	P 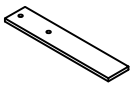 2PCS
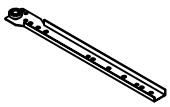 CL*9	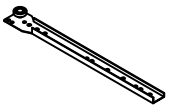 CR *9	 DL*9	 DR *9

STEP 1

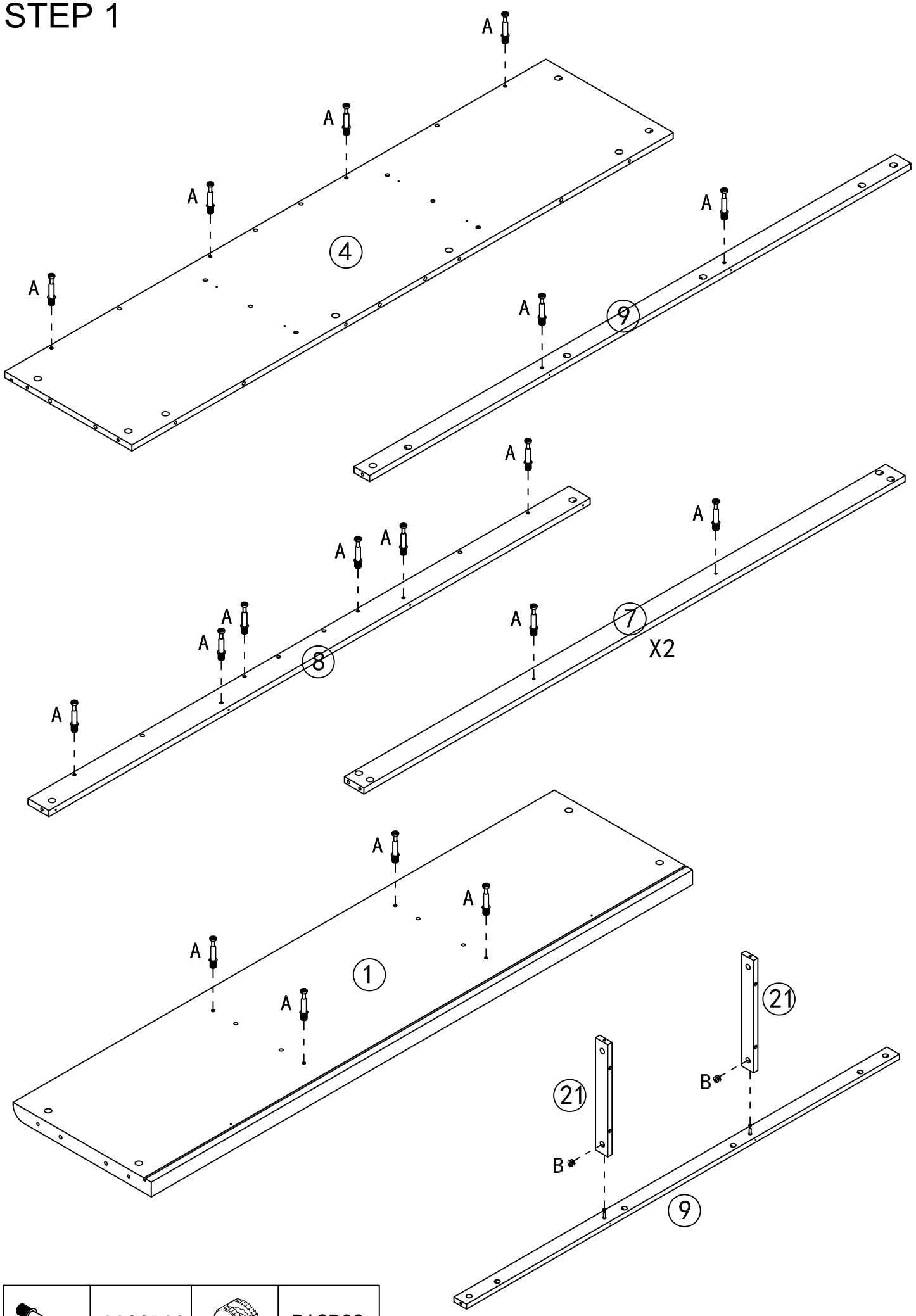

	A*20PCS		B*2PCS

STEP 2

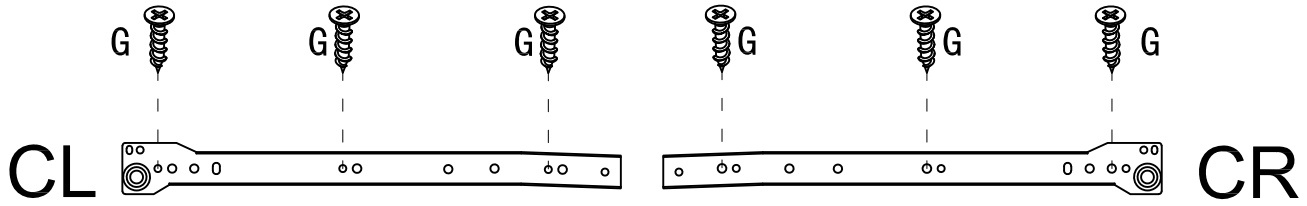

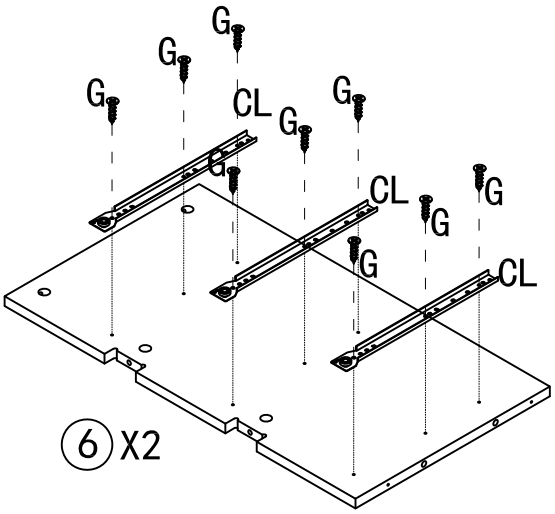

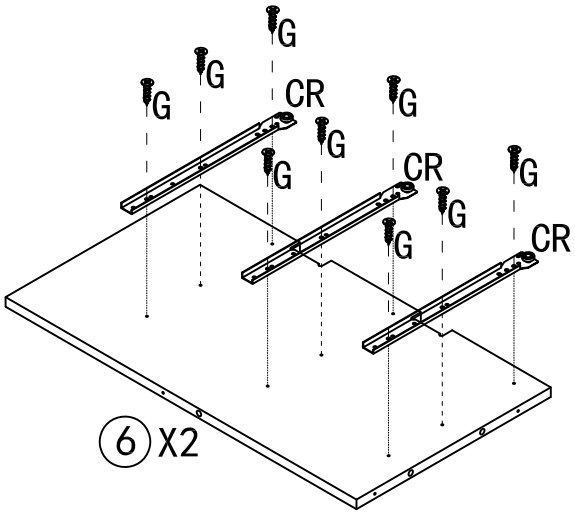

	G*36PCS		CL*6		CR *6

STEP 3

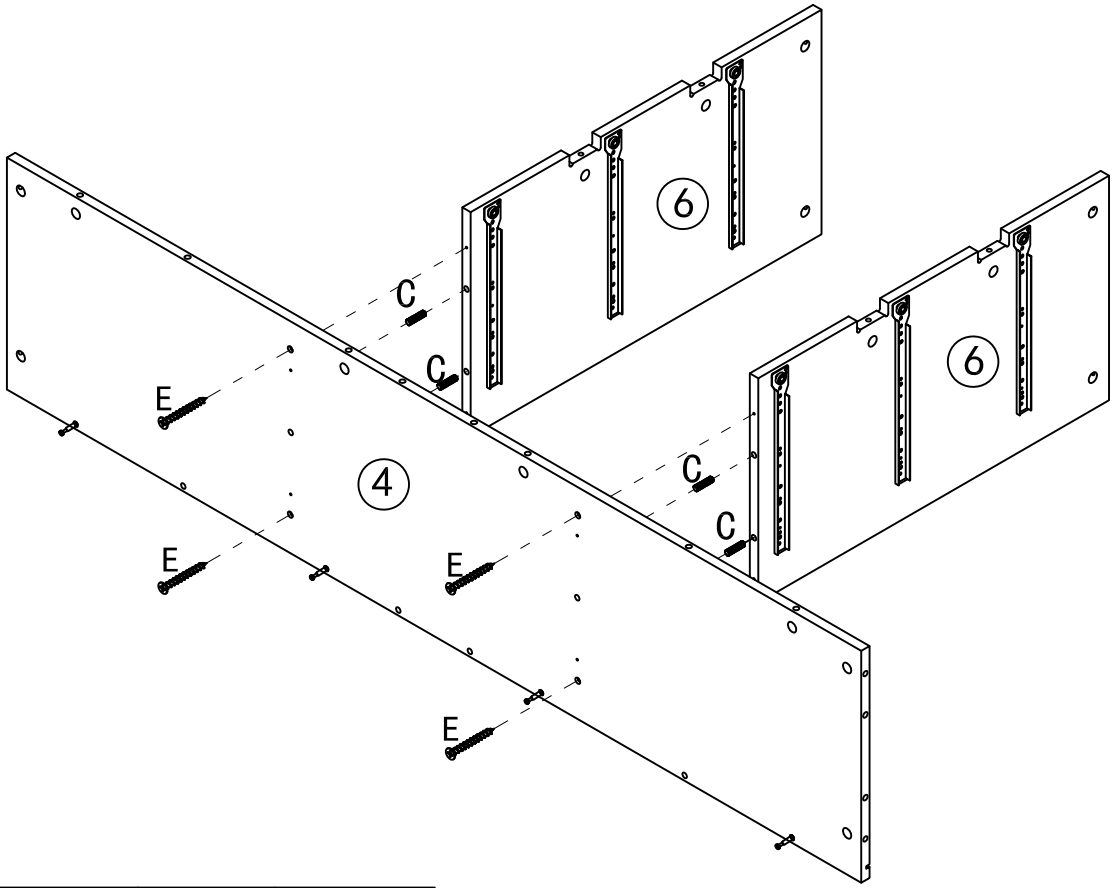

	E*4PCS	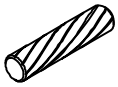	C*4PCS

STEP 4

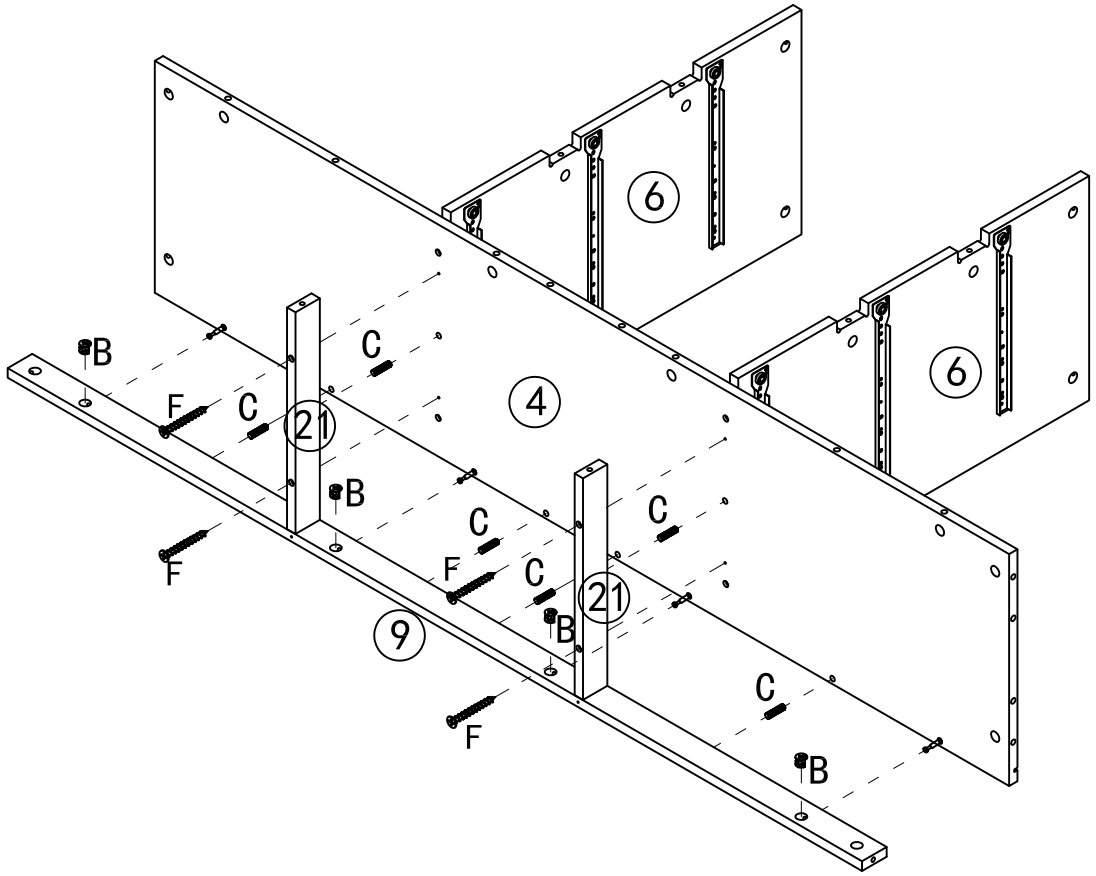

	B*4PCS	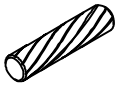	C*6PCS		F*4PCS

STEP 5

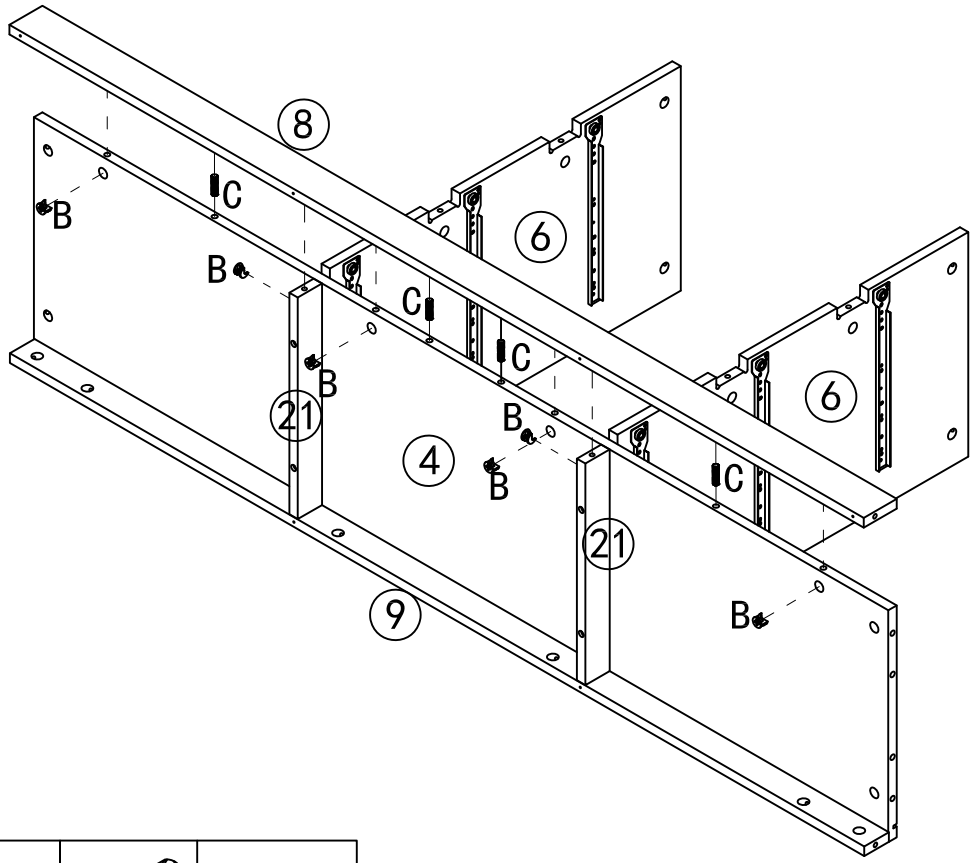

	B*6PCS	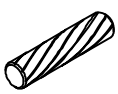	C*4PCS

STEP 6

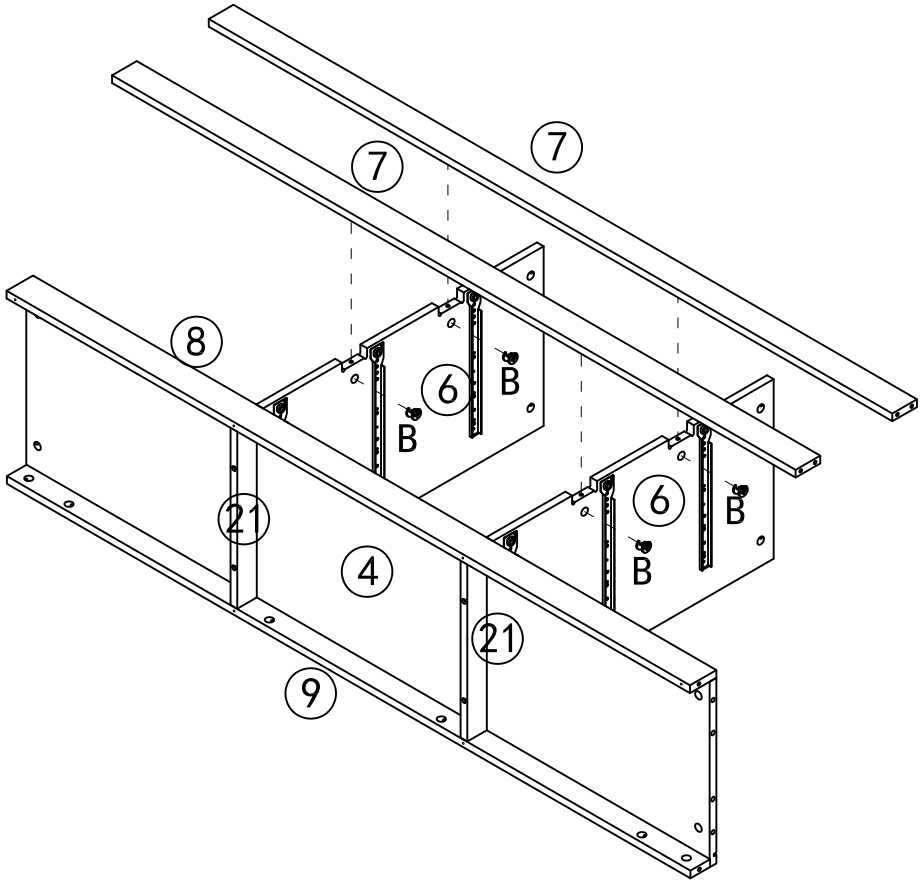

	B*4PCS

STEP 7

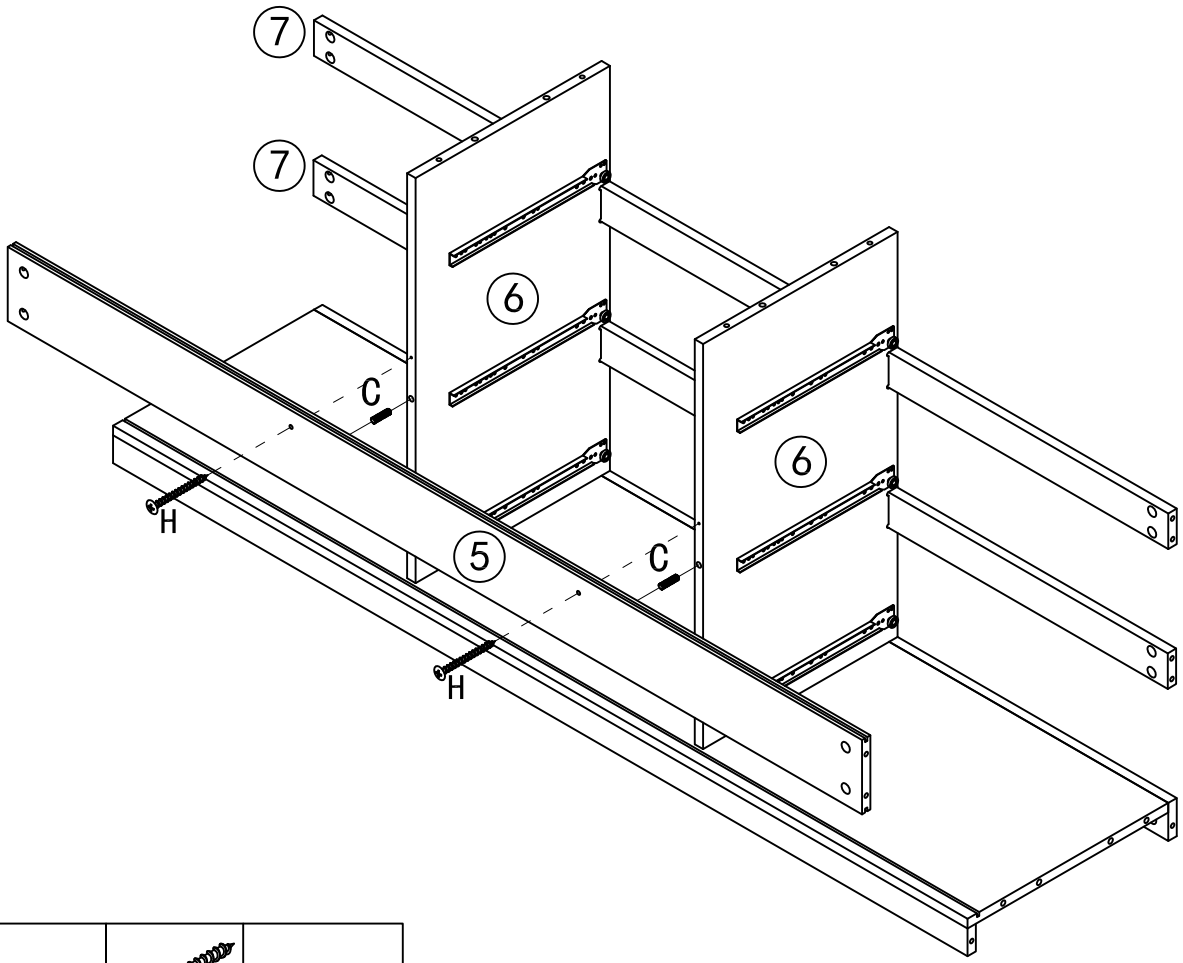

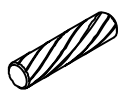	C*2PCS	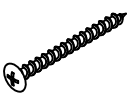	H*2PCS

STEP 8

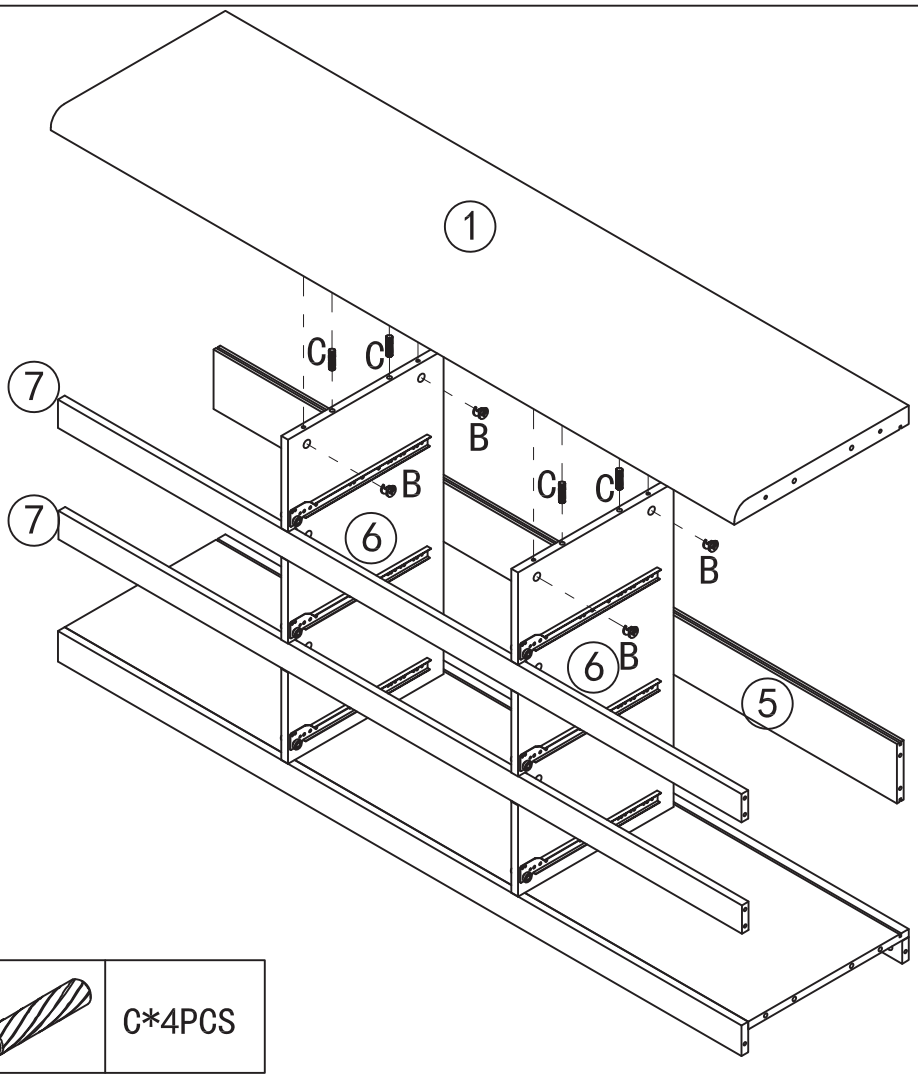

	B*4PCS		C*4PCS

STEP 9

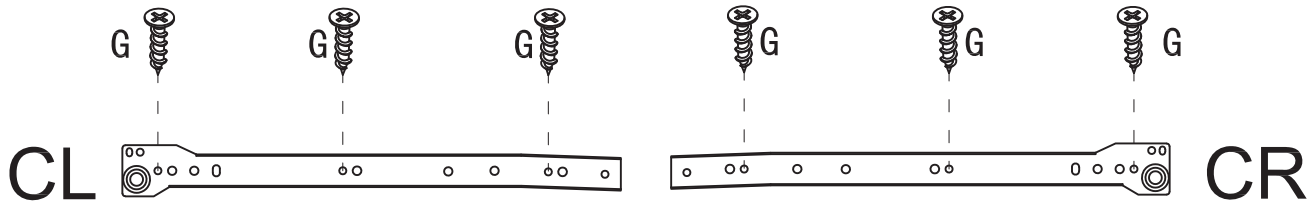

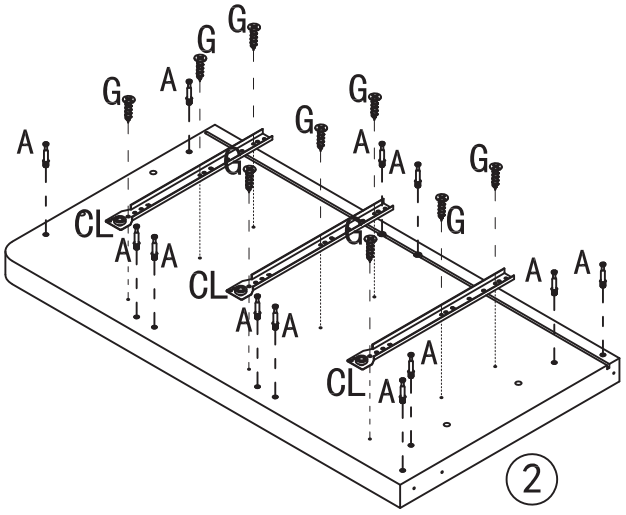

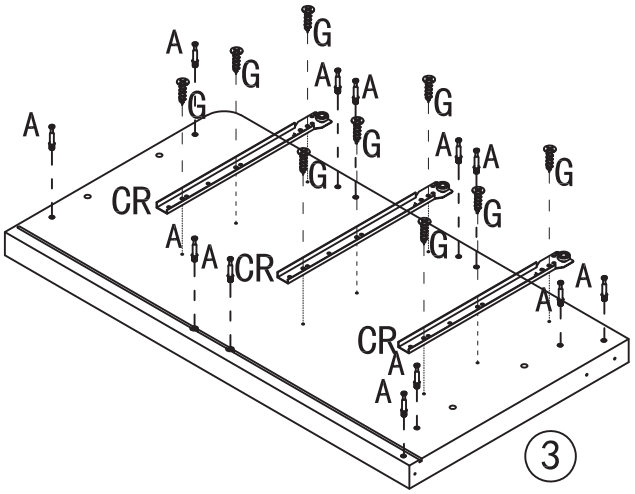

	A*24PCS		G*18PCS		CL*3		CR *3

STEP 10

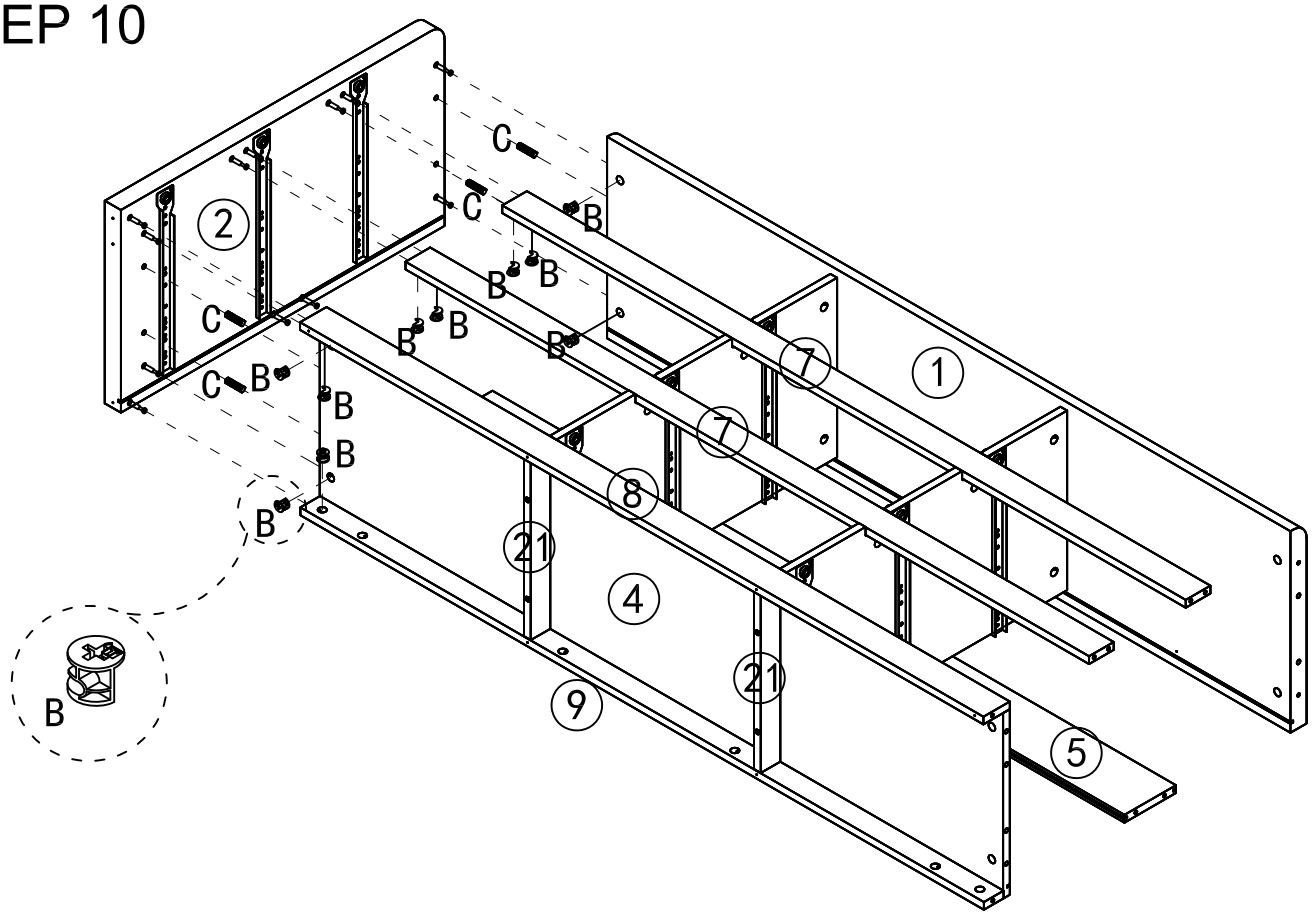

	B*10PCS	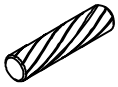	C*4PCS

STEP 11

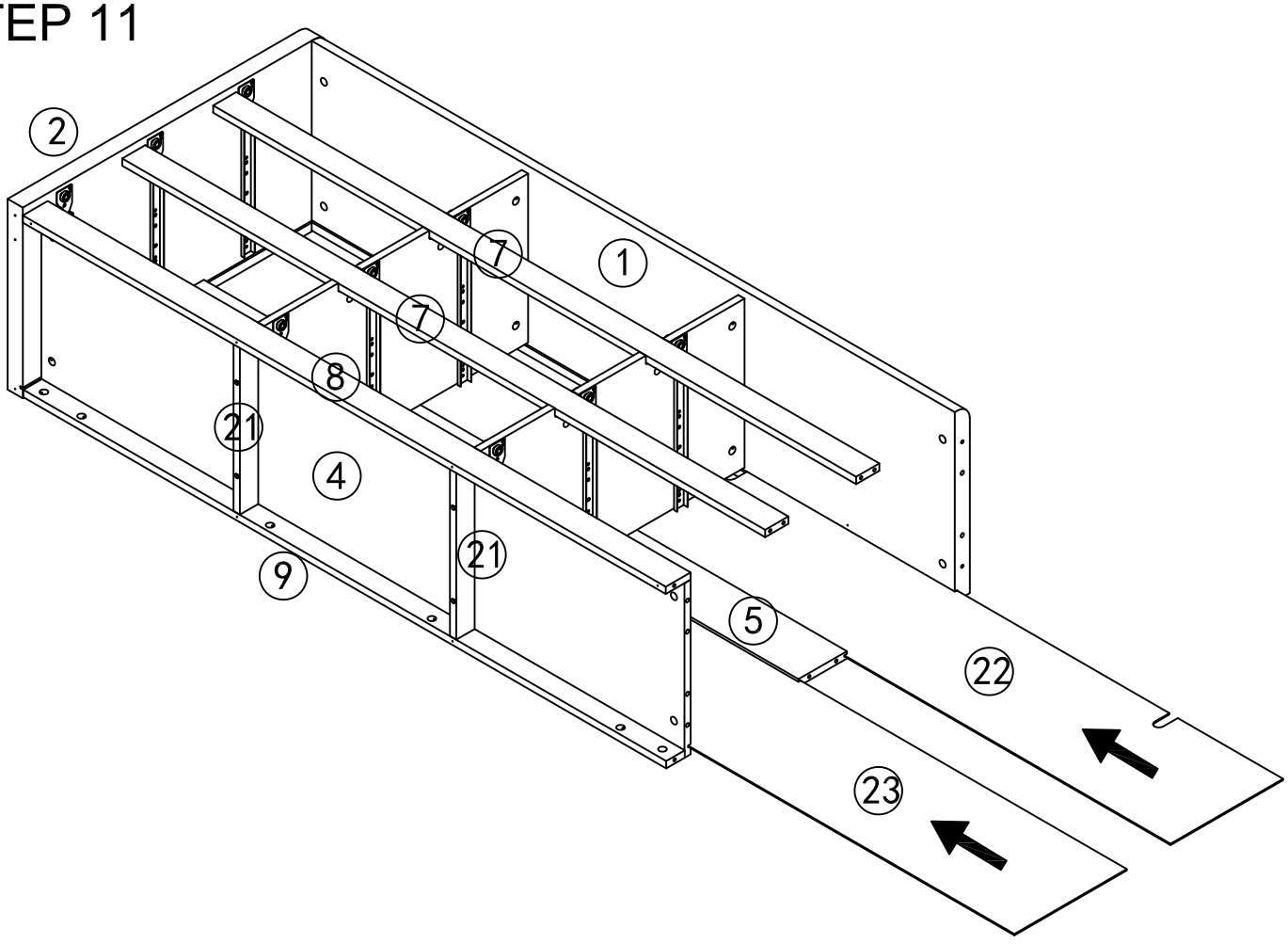

STEP 12

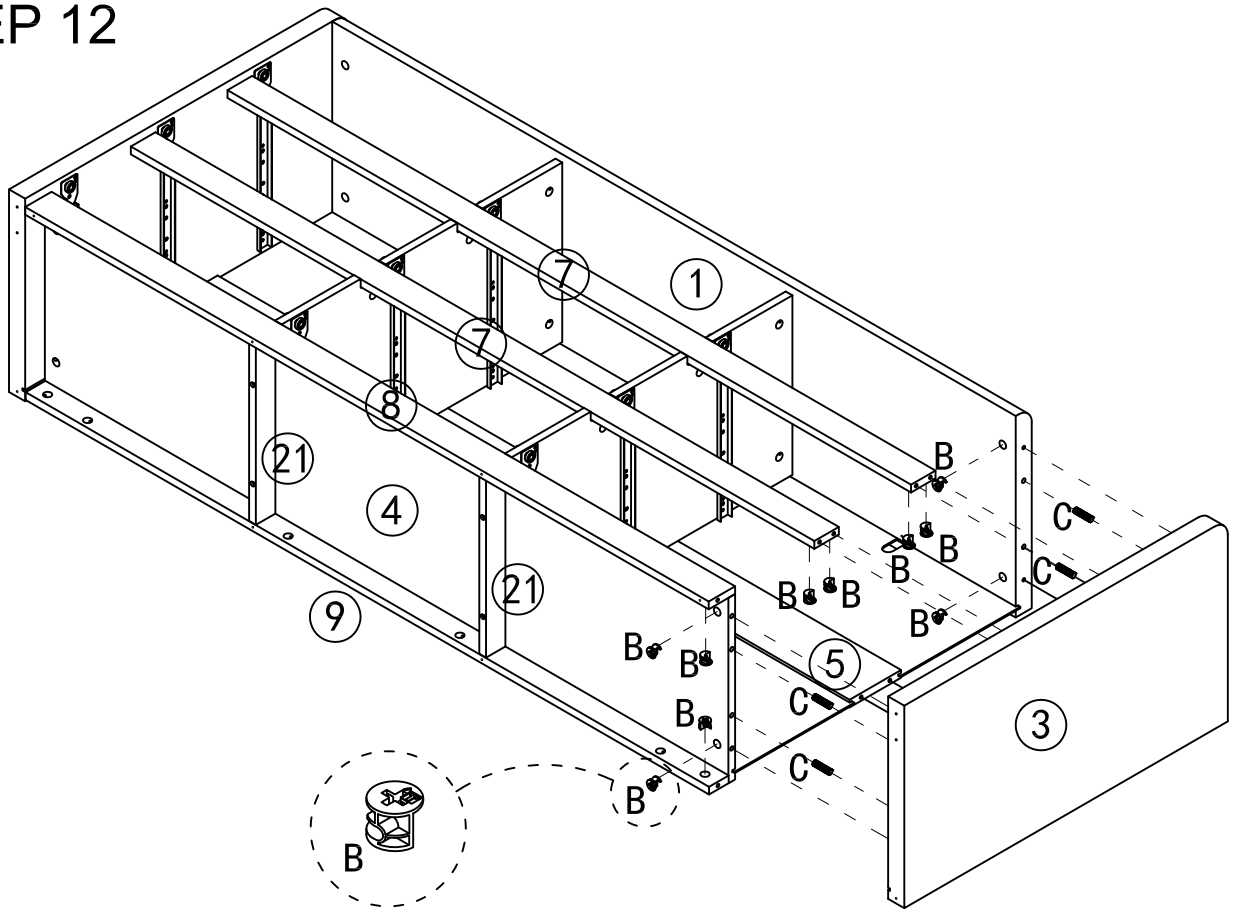

	B*10PCS	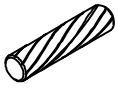	C*4PCS

STEP 13

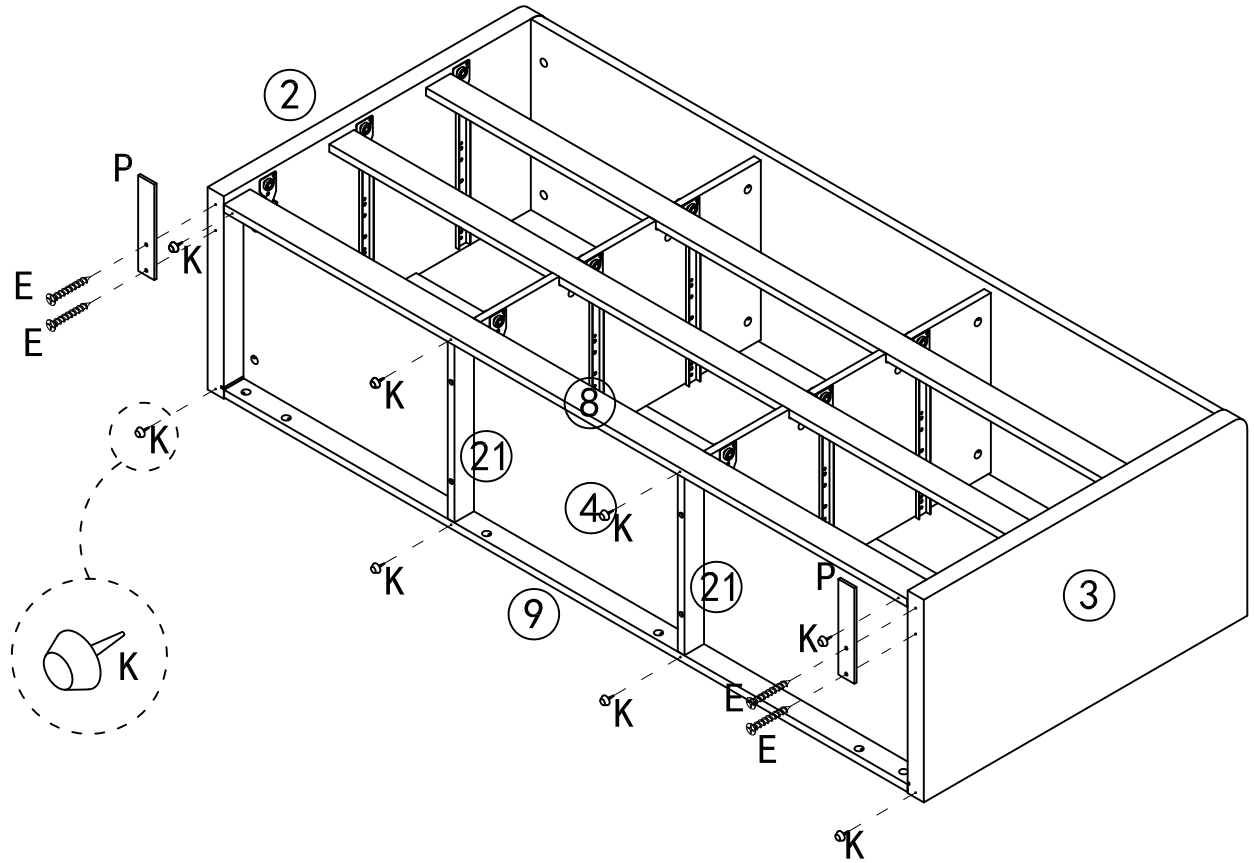

	E*4PCS	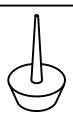	K*8PCS	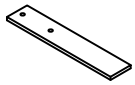	P*2PCS

STEP 14

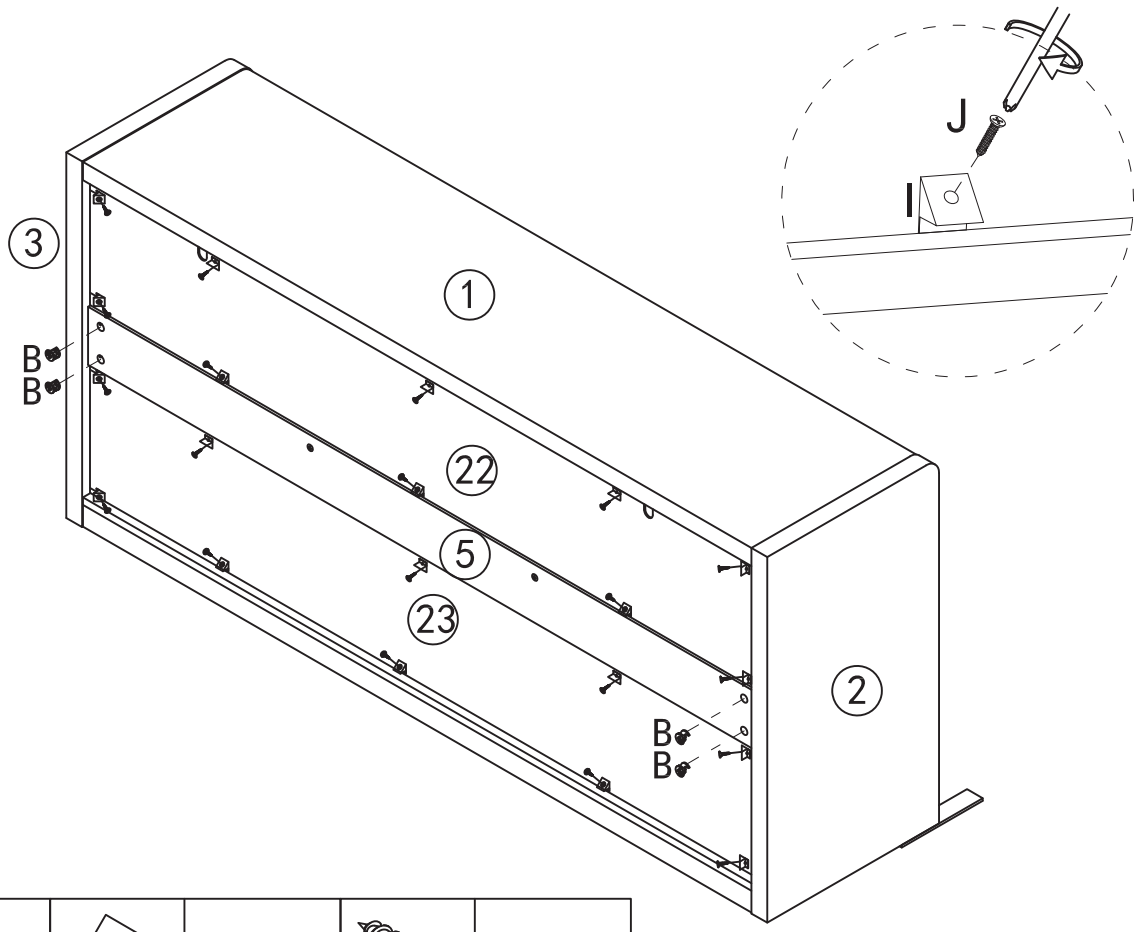

	B*4PCS		I*20PCS		J*20PCS

STEP 15

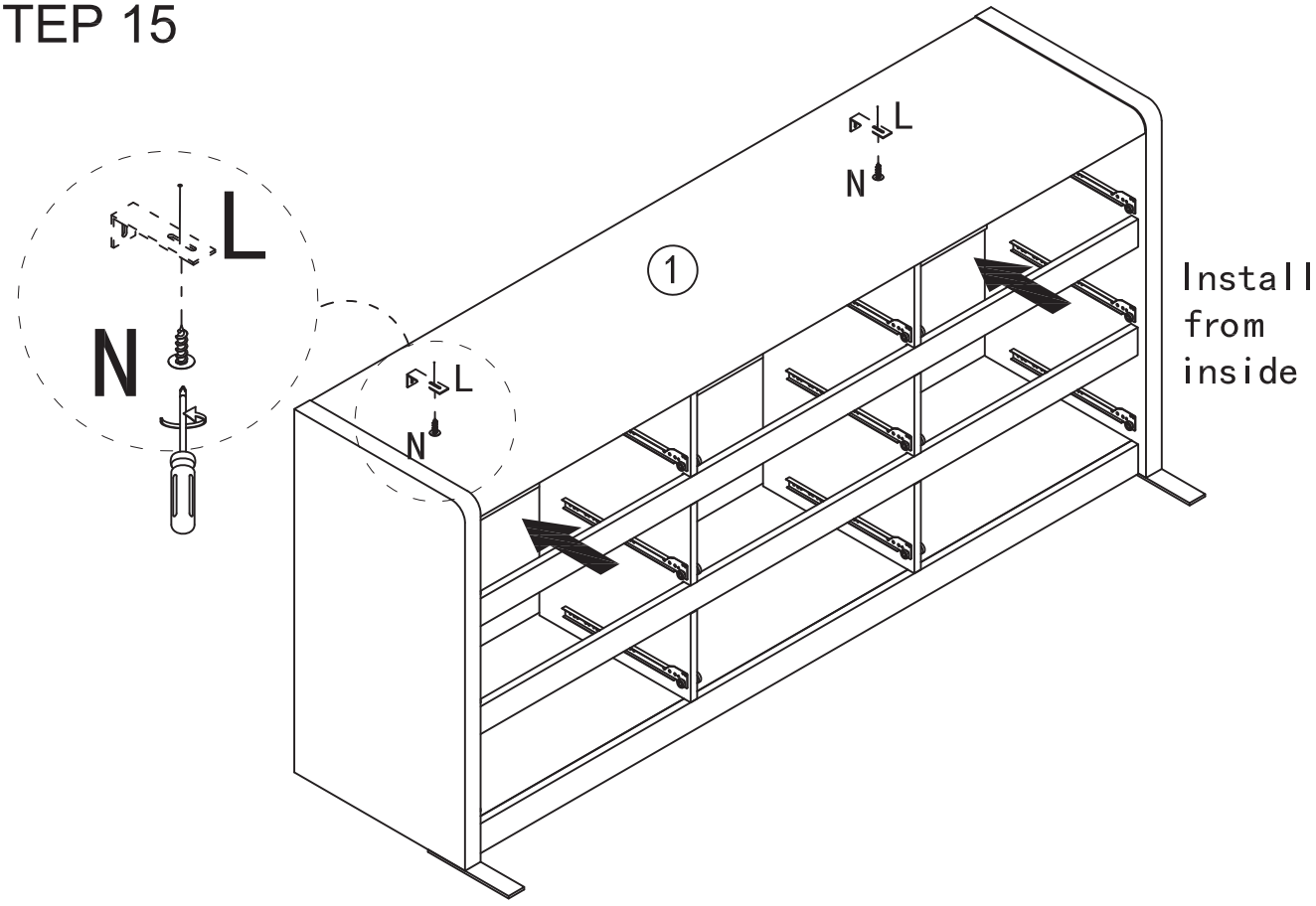

	L*2PCS		N*2PCS

STEP 16

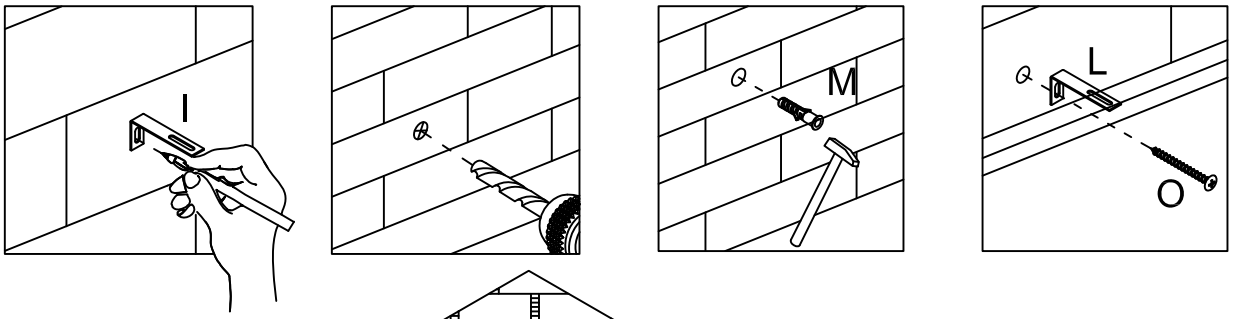

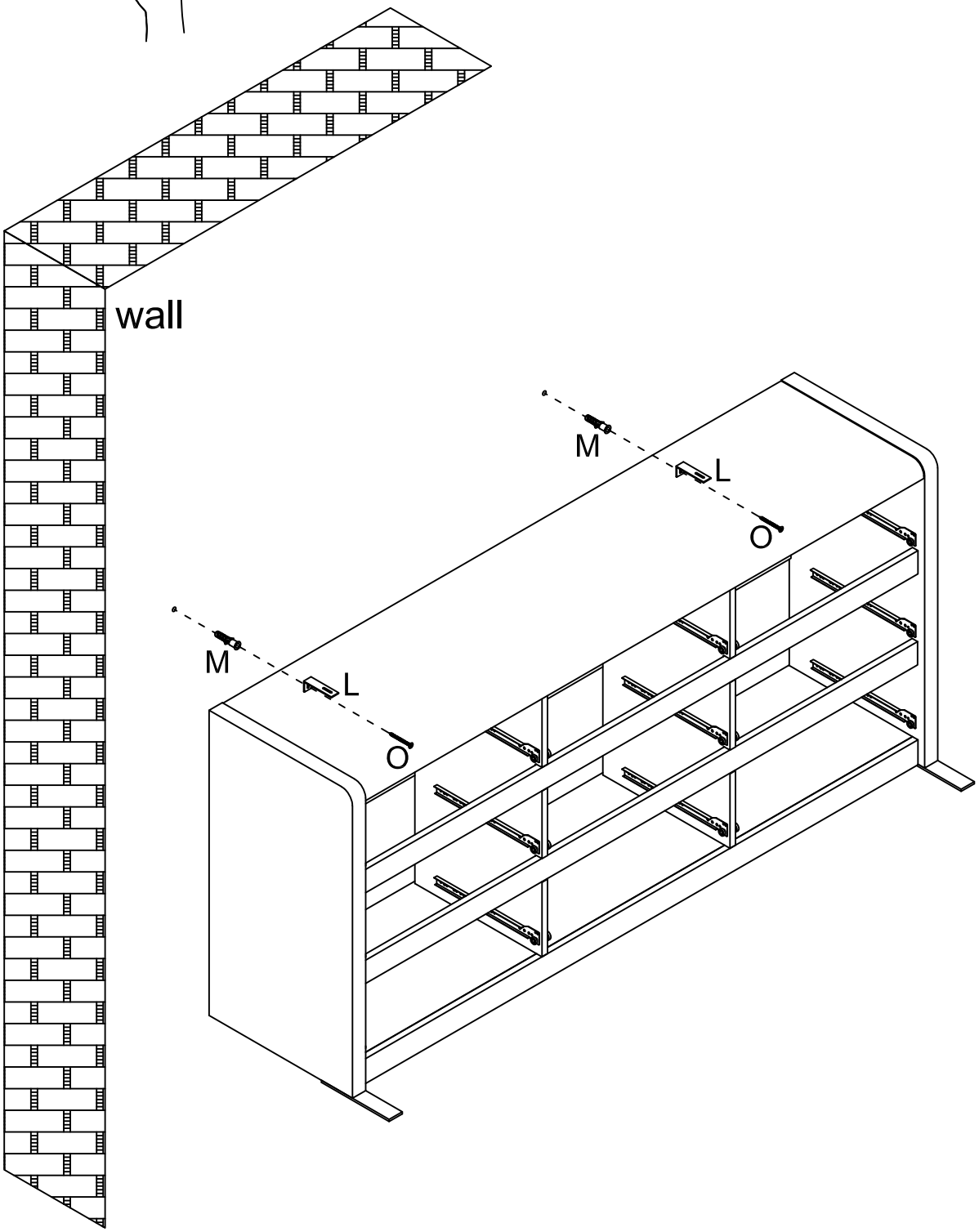

	O*2PCS		M*2PCS

STEP 17

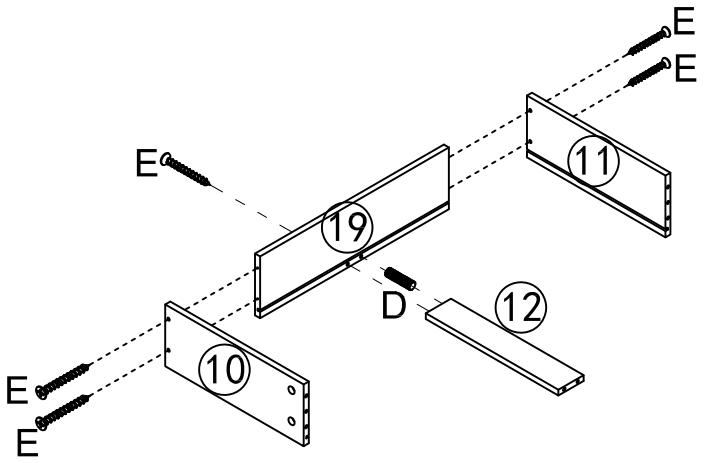

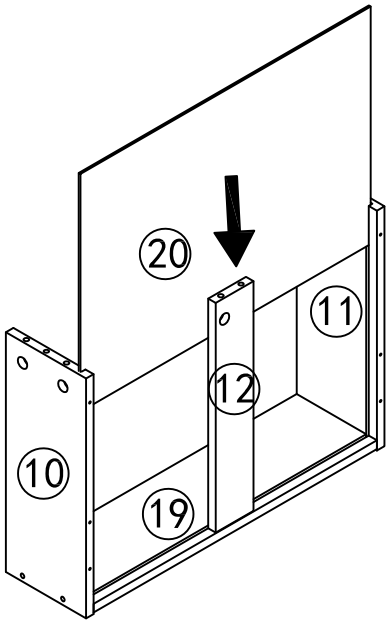

	E*45PCS	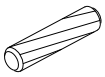	D*9PCS

X9

STEP 18

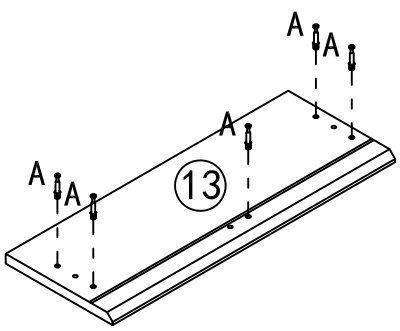

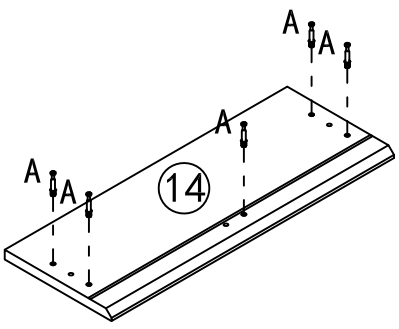

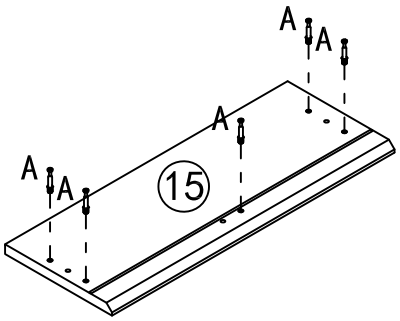

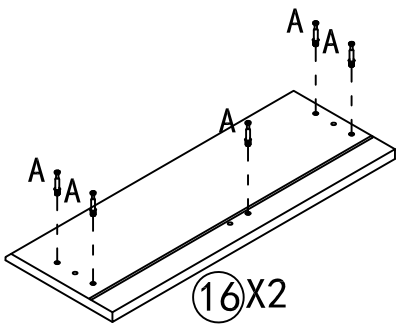

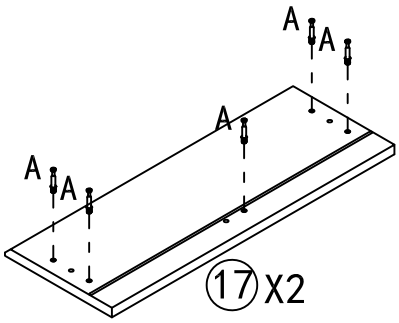

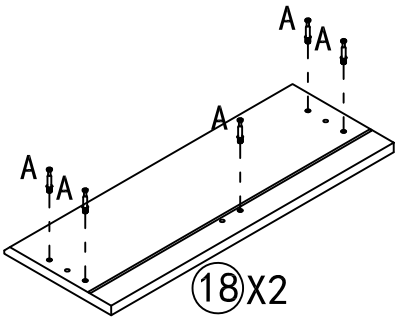

	A*45PCS

STEP 19

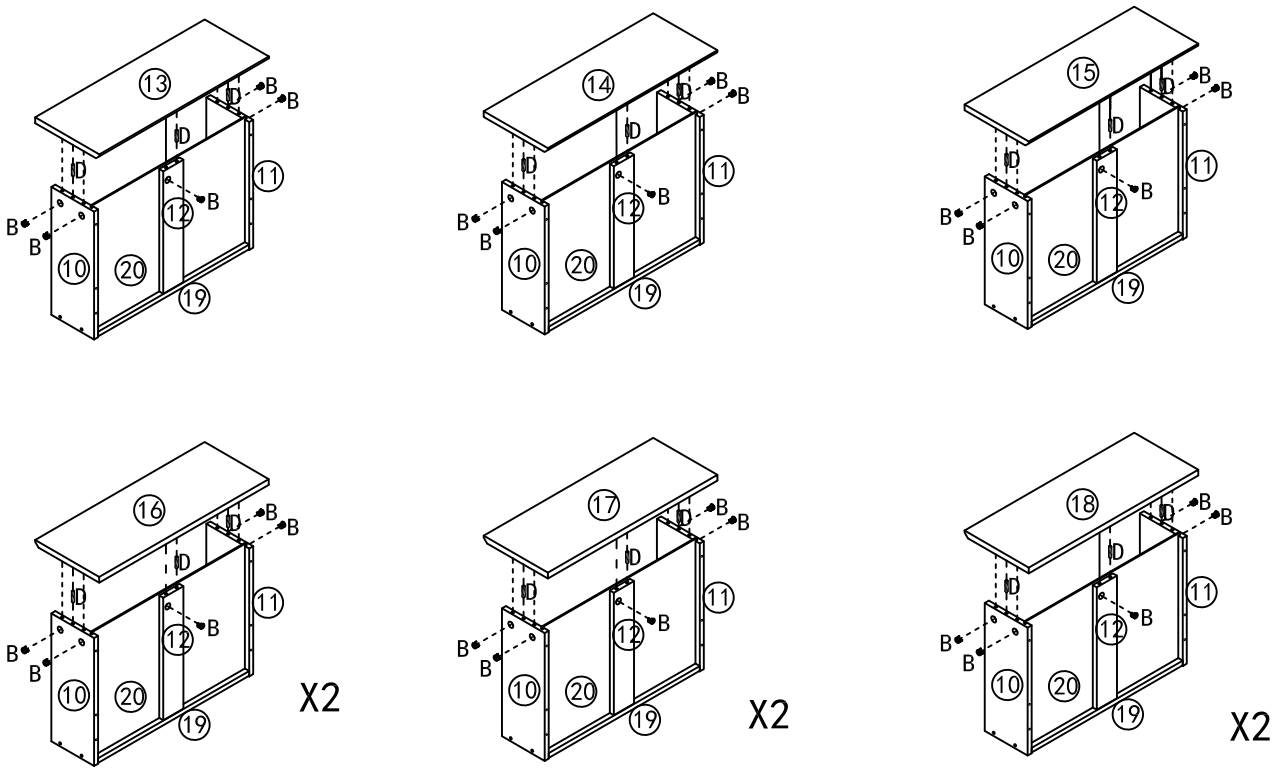

	B*45PCS	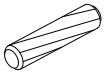	D*27PCS

STEP 20

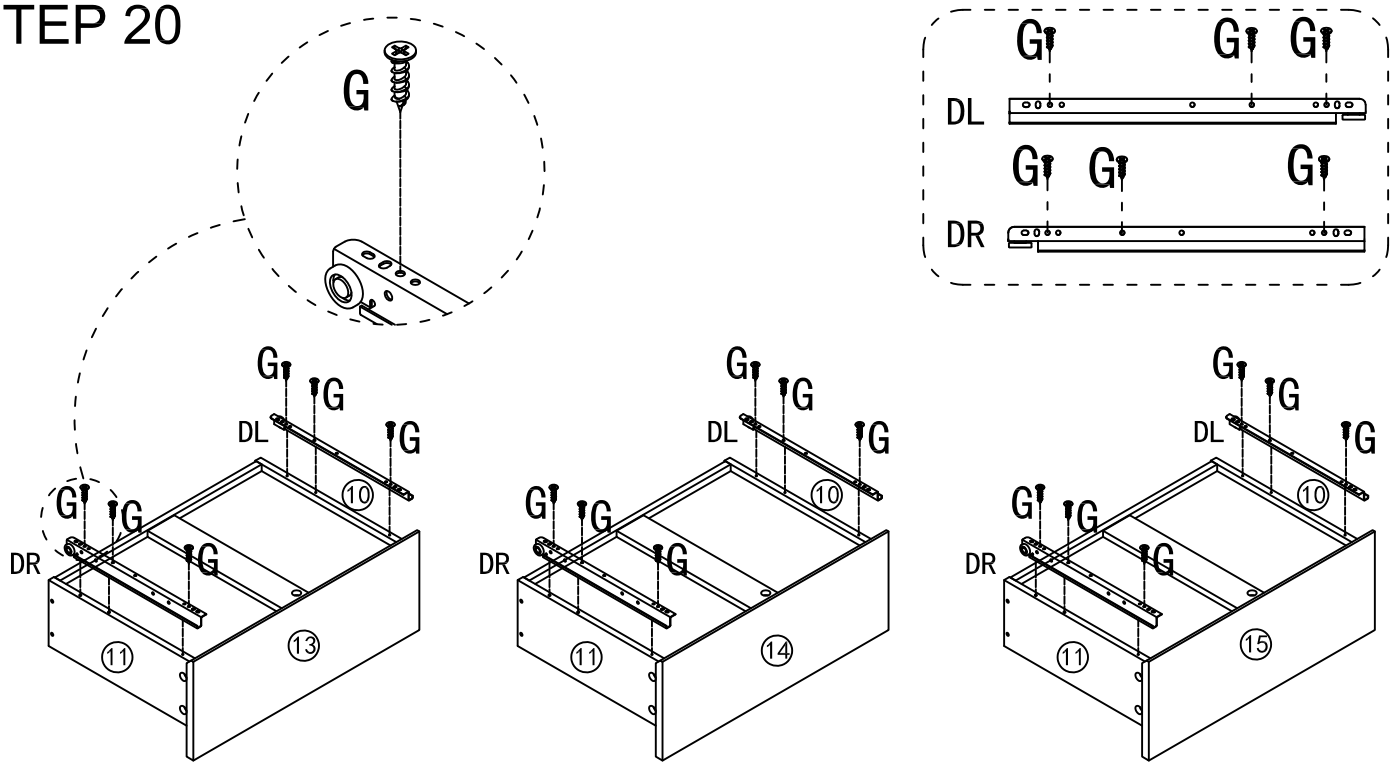

	G*18PCS		DL*3PCS		DR*3PCS

STEP 21

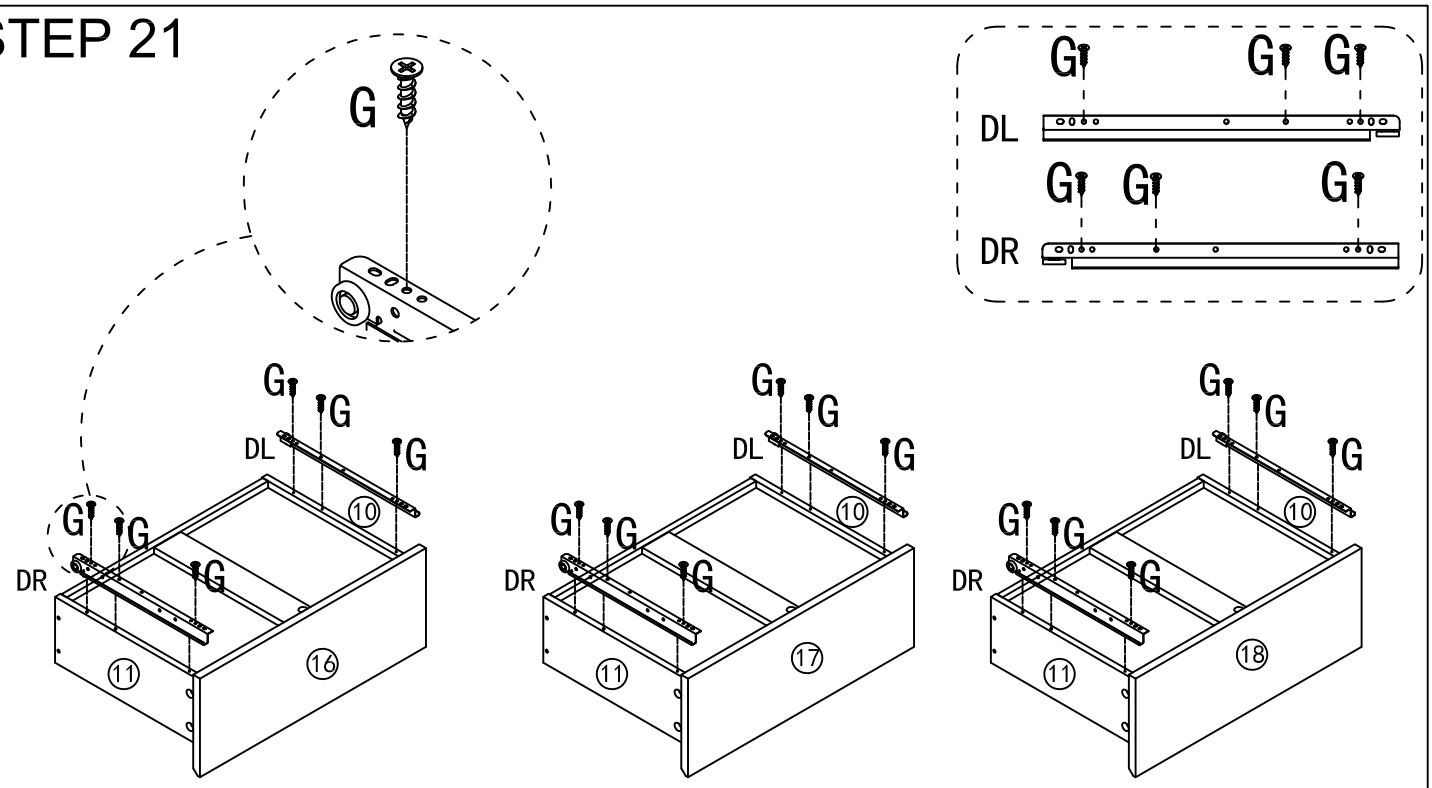

	G*36PCS		DL*6PCS		DR*6PCS

X2

STEP 22

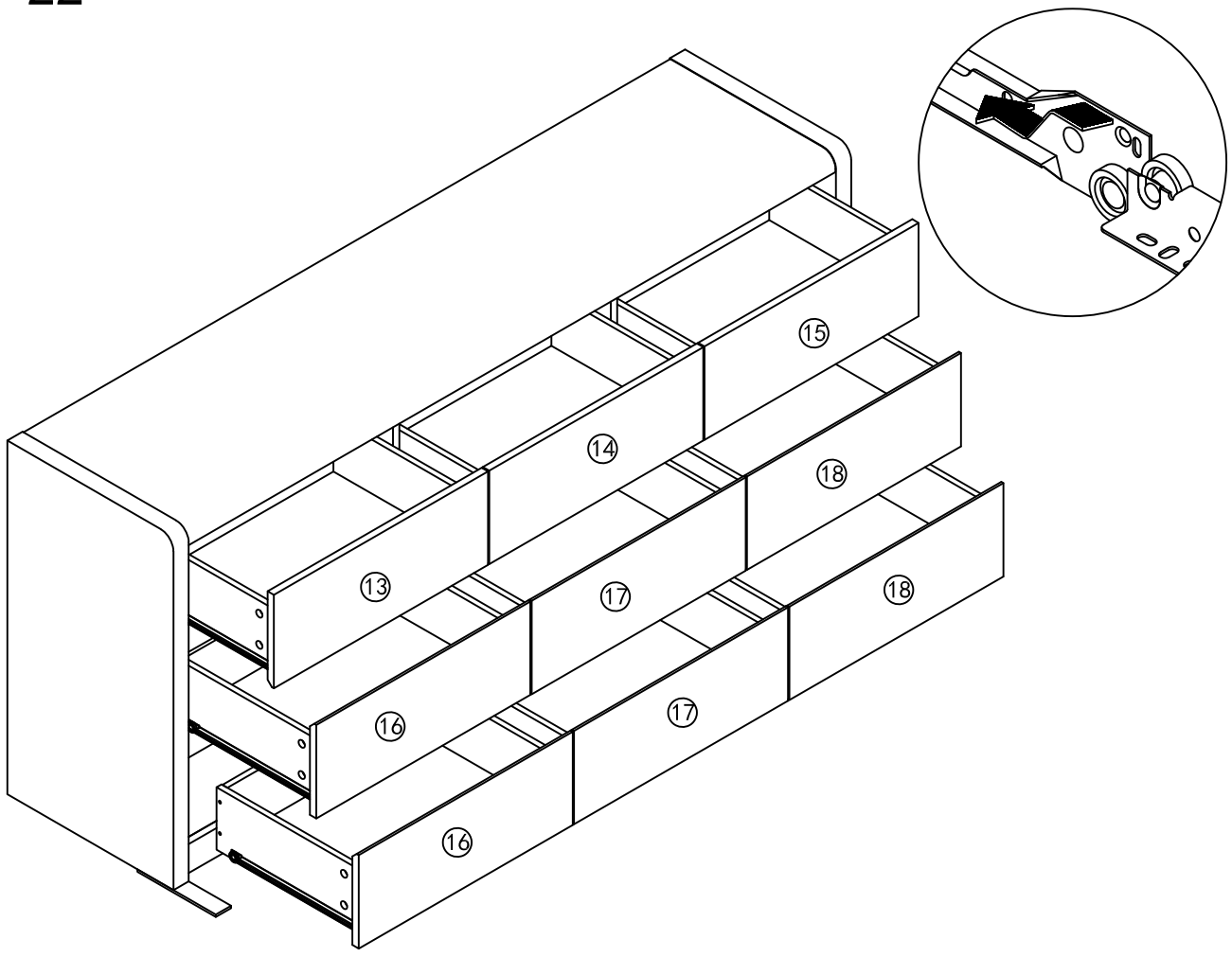

STEP 23

