Product ID. QU5CH

Scan for Support
support@garvee.com

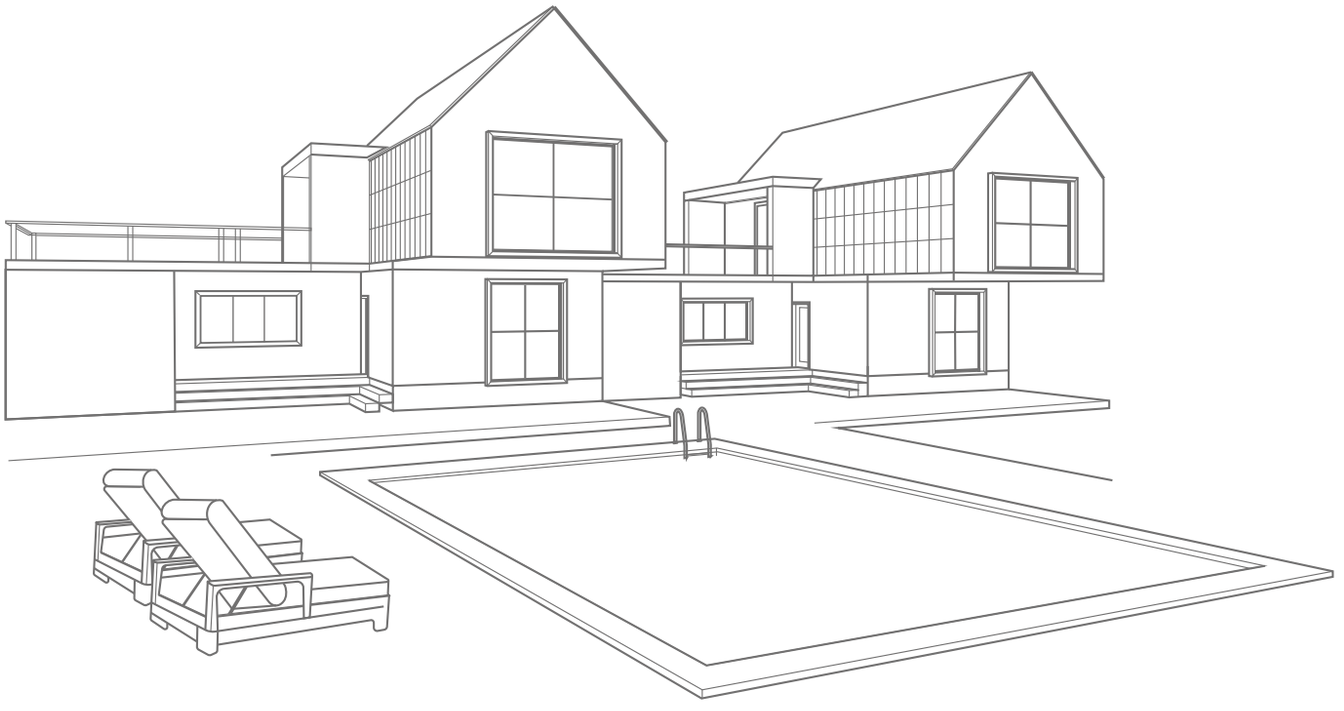

V2603235GNS

ASSEMBLY INSTRUCTIONS-IMPORTANT:

Carefully unpack&identify each component before attempting to assemble,Refer to the parts list.Please take care when assembling the unit and always set the parts on a clean, soft surface.

Check screws,nuts and bolts periodically (or every 6 months). Tighten if necessary.

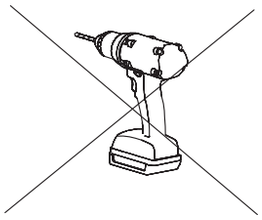

WARNING:DO NOT USE POWER TOOLS

ADDITIONAL TOOL REQUIRED:

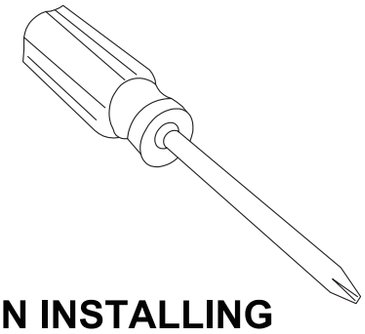

WHEN INSTALLING ACCESSORY"A",GENTLY APPLY FORCE,NOT TOO TIGHE.

CAUTION!

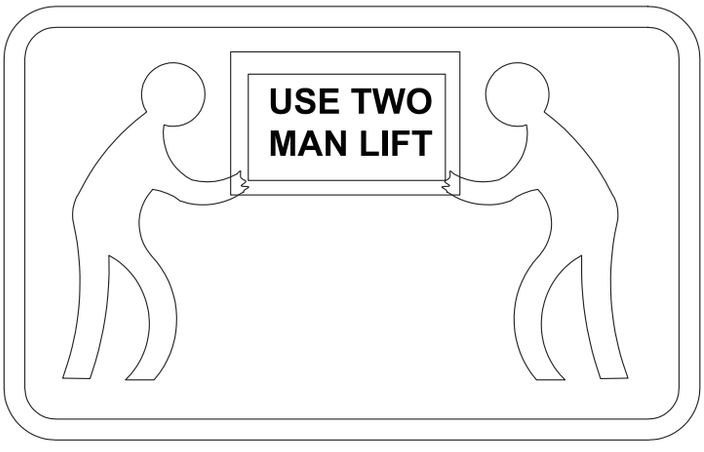

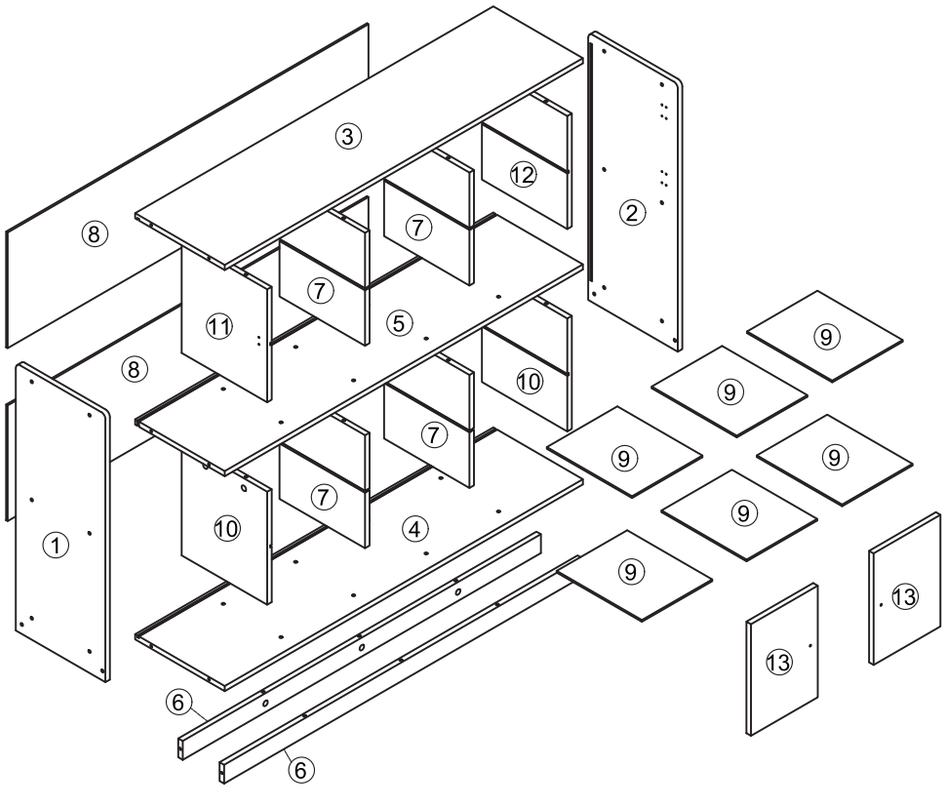

(A) Part lists

DESCRIPTION	QTY	PICTURE
① side-board 770*298*15mm	×1	
② side-board 770*298*15mm	×1	
③ Table top 1190*298*15mm	×1	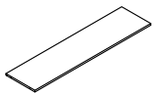
④ Bottom drawing 1190**298*15mm	×1	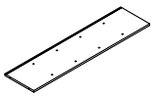
⑤ layer-board 1190*298*15mm	×1	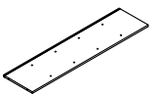
⑥ Skirting line 1190*54*15mm	×2	
⑦ side-board 325*284*15mm	×4	
⑧ drawing Back-board 1199*333*5mm	×2	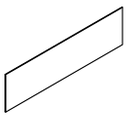
⑨ layer-board 283*234*5mm	×6	
⑩ side-board 325*284*15mm	×2	
⑪ side-board 325*284*15mm	×1	
⑫ side-board 325*284*15mm	×1	
⑬ door-board 321*222*15mm	×2	

(B)-9 Part lists

A	Eccentric fittings	×22+2		B	Eccentric fittings	×22+2		C Wheel ×2 
D	Wheel	×2		E	Screws	×28+2	 Ø3.5*14	F Screws ×32+2 
G	Screwdriver	×1	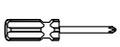	H	Screws	×16+2	 Ø6*10	J Storage box ×1 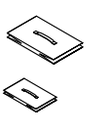
K	Stop plate	×2		L	Hinge	×4	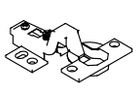	M Door knob ×2 
N	Screws	×2	 Ø4*18	O	Anti-tipping device	×2	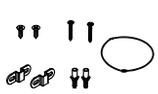	

STEP:1

Attach Component A to Board number ③.

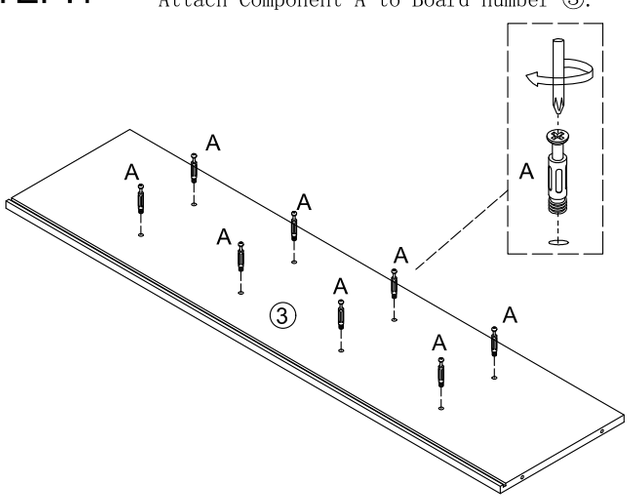

A×8

STEP:2

Attach Component A to Board number ⑤.

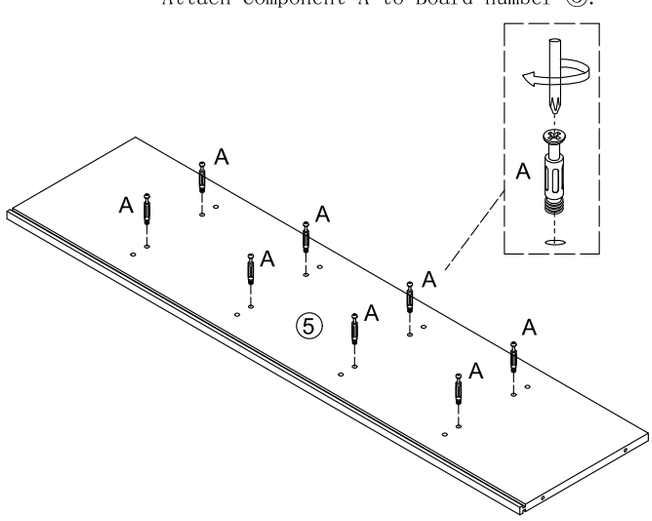

A×8

STEP:3

Attach Component A to Board number ④

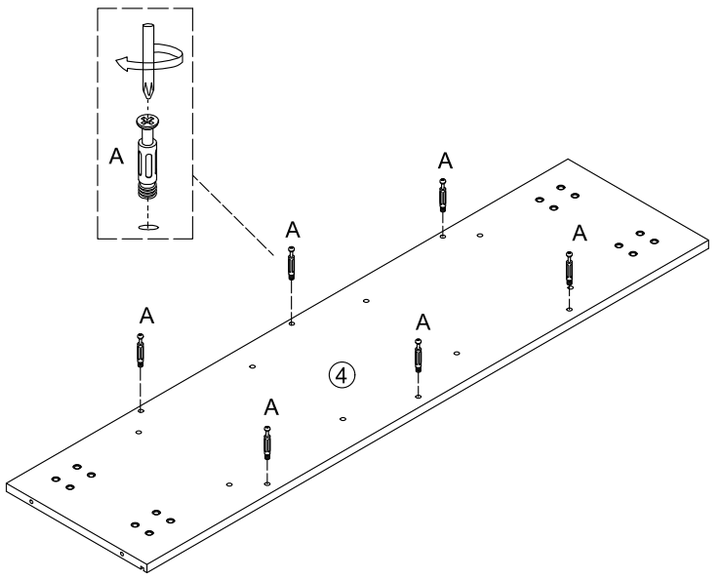

A×6

STEP:4

Plate ⑥ is mounted on plate④ and locked with component B.

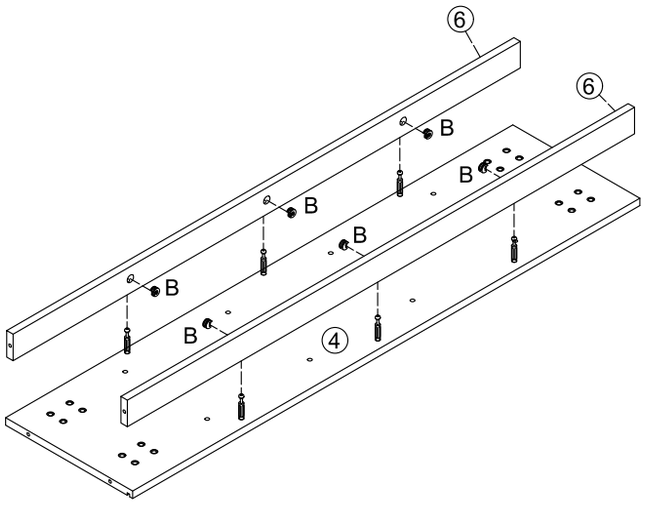

B×6

STEP:5

Install component K on board ⑪ and ⑫ with component E.

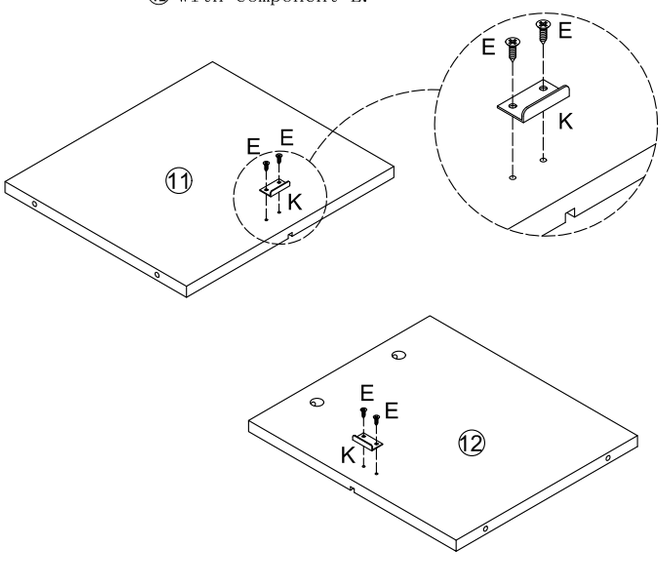

E×4
K×2

STEP:6

Pay attention to the direction of the slot.

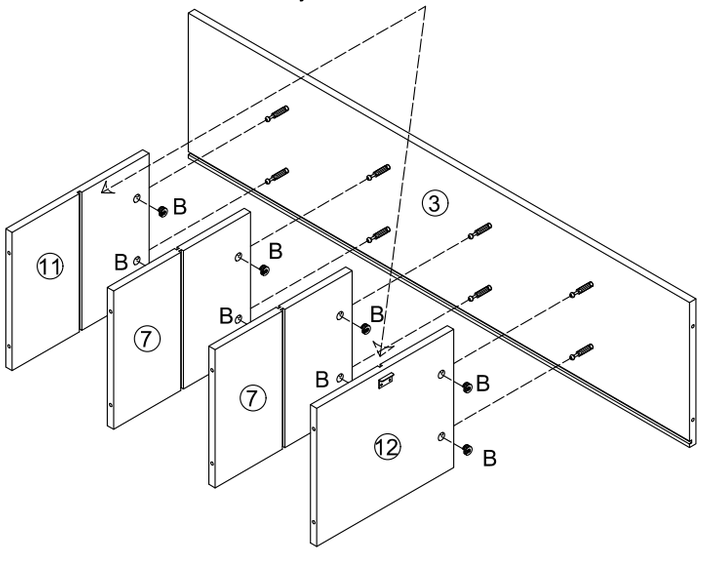

Plates ⑦, ⑪ , and ⑫ are installed on plates ③ and locked with component B.

B×8

STEP:7

Lock plate ⑤ with component F.

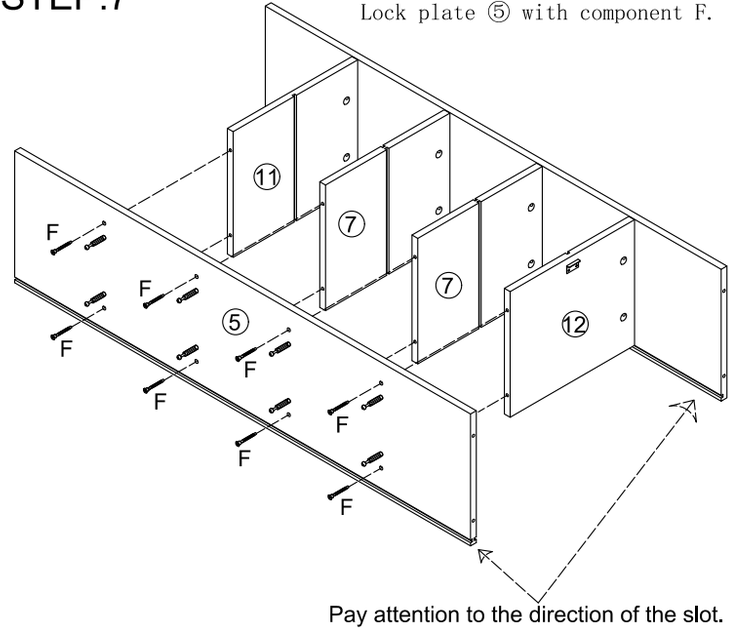

F×8

STEP:8

Plates ⑦and⑩ are mounted on plates⑤ and locked with component B.

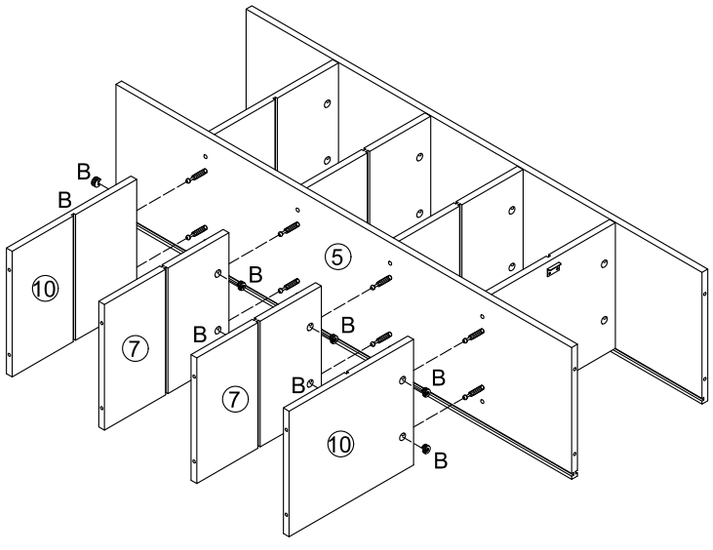

B×8

STEP:9

Lock plate ④ with component F.

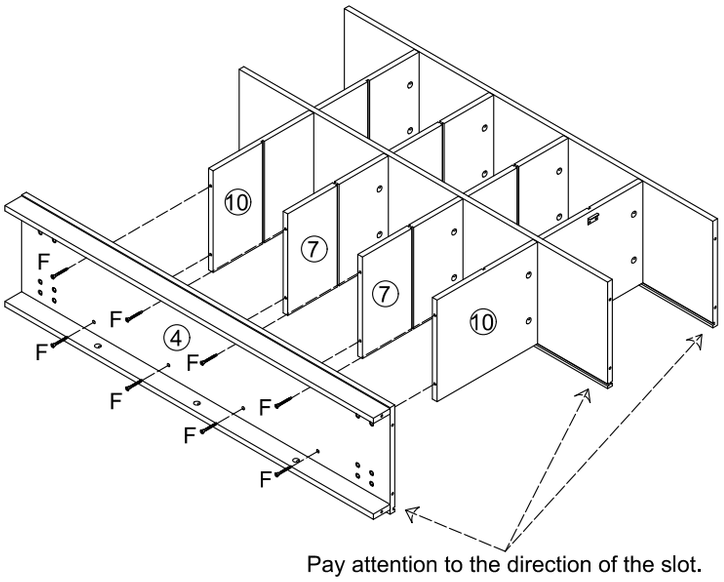

Pay attention to the direction of the slot.

F×8

STEP:10

Lock plate ① with component F

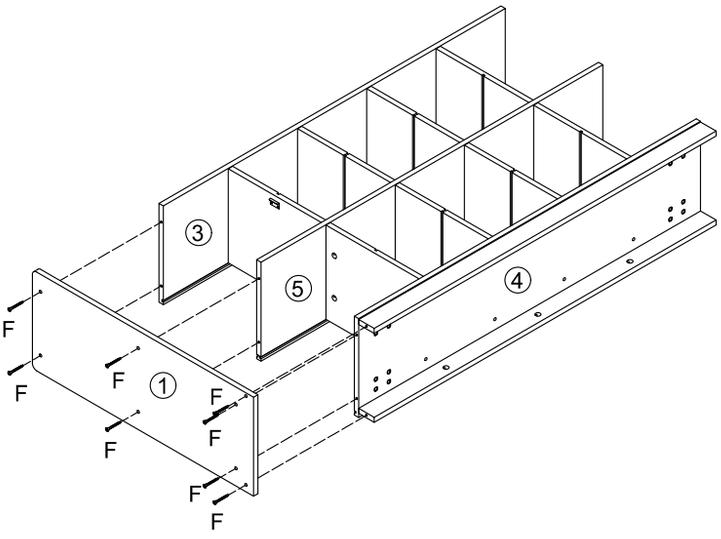

F×8

STEP:11

As shown, insert board ⑧

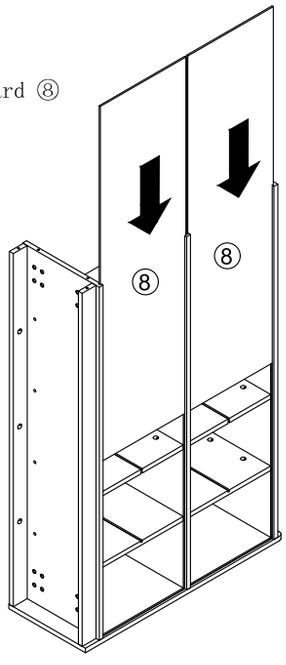

STEP:12

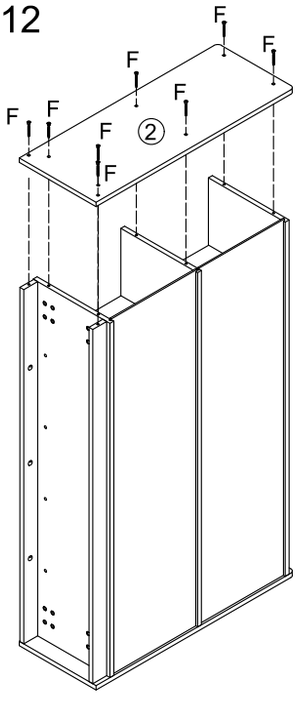

Lock plate② with component F.

F×8

STEP:13

Assemble components C and D on board ④ with component H.

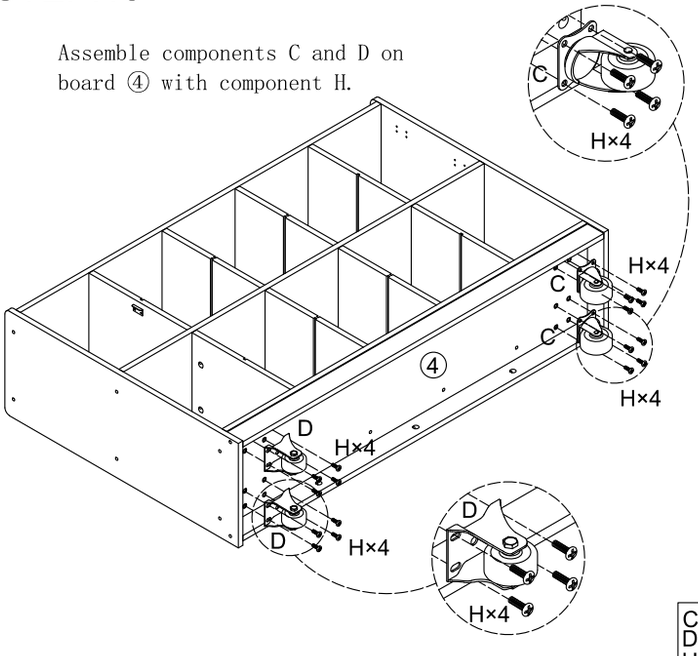

C×2
D×2
H×16

STEP:14

Fix component L and component M to board ⑬ as shown.

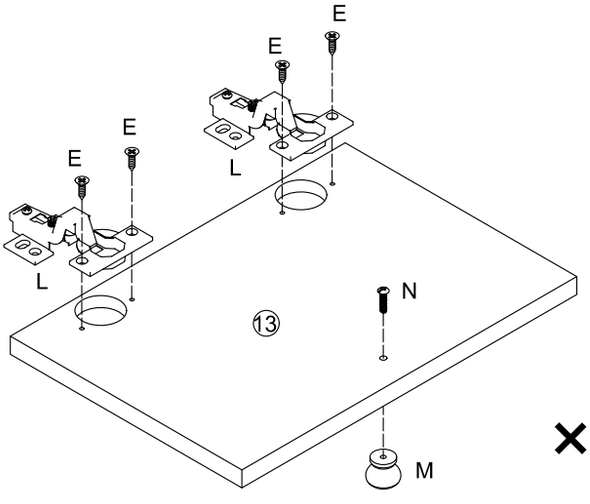

×2

E×8
L×4
M×2
N×2

STEP:15

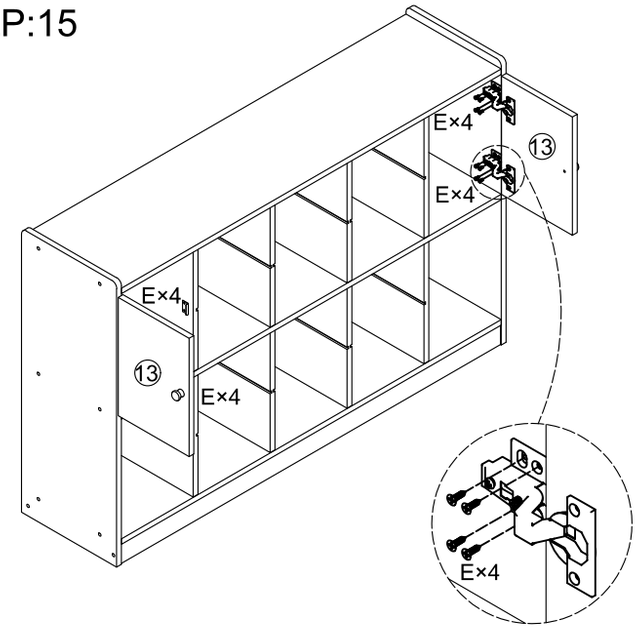

As shown in the figure, use component E to fix the ⑬ board to the cabinet body.

E×16

STEP:16

As shown, insert board ⑨

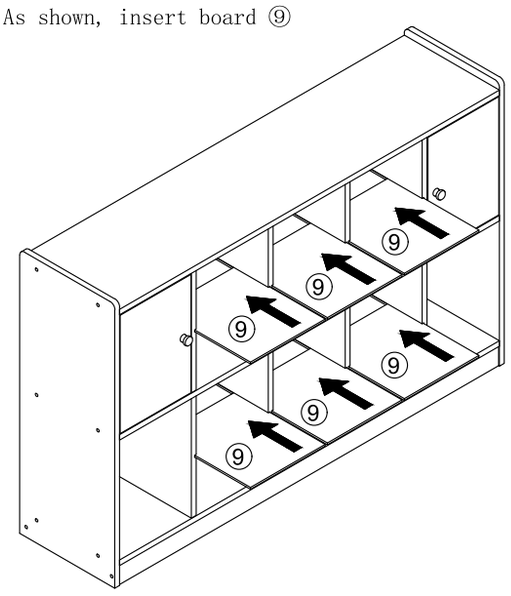

STEP:17

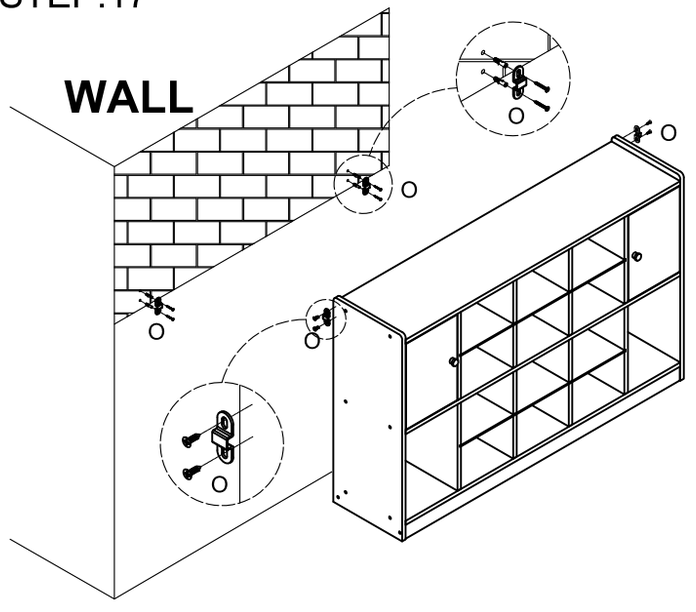

Please install the anti-tip accessories as needed.

O×2

STEP:18

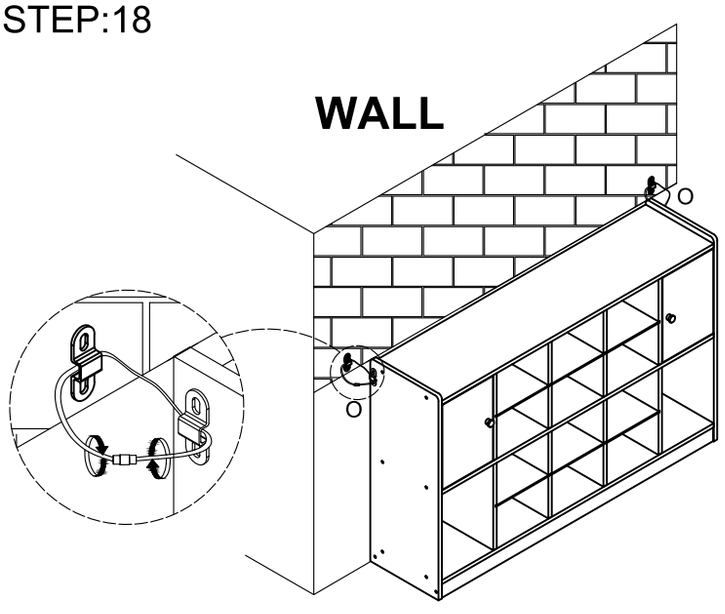

Please install the anti-tip accessories as needed.

STEP:19

Expand component J.

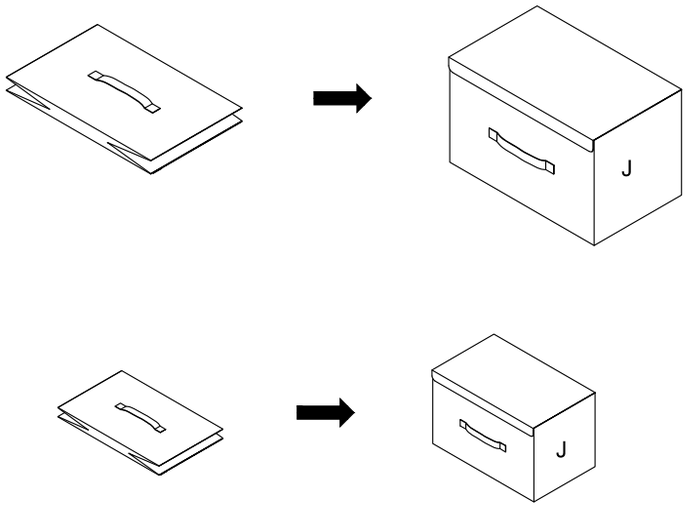

J×1

STEP:20

Place the component on top.

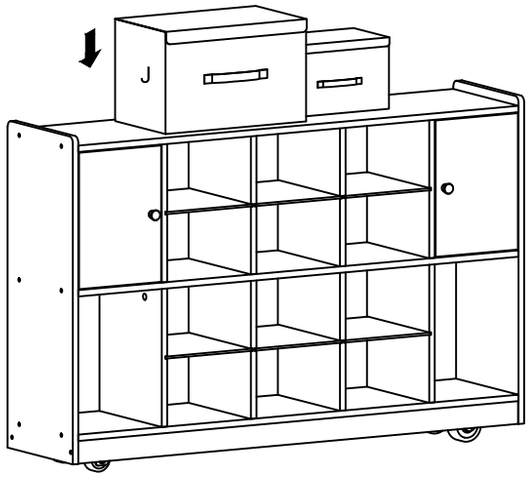

STEP:15

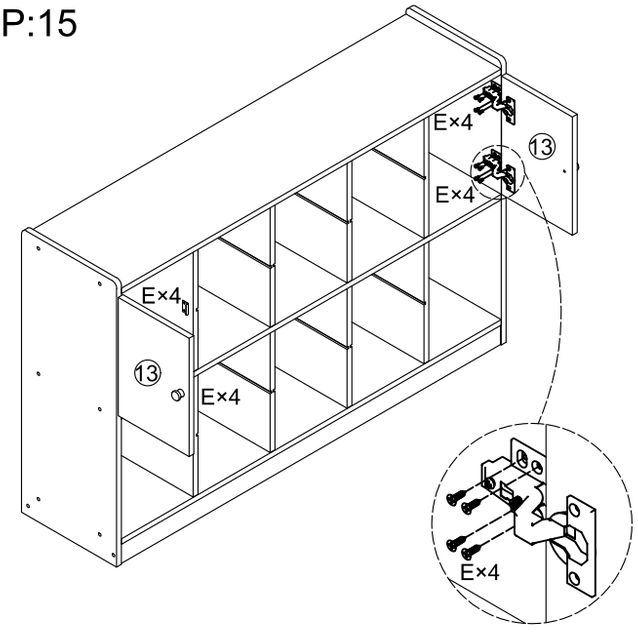

As shown in the figure, use component E to fix the ⑬ board to the cabinet body.

E×16

STEP:16

As shown, insert board ⑨

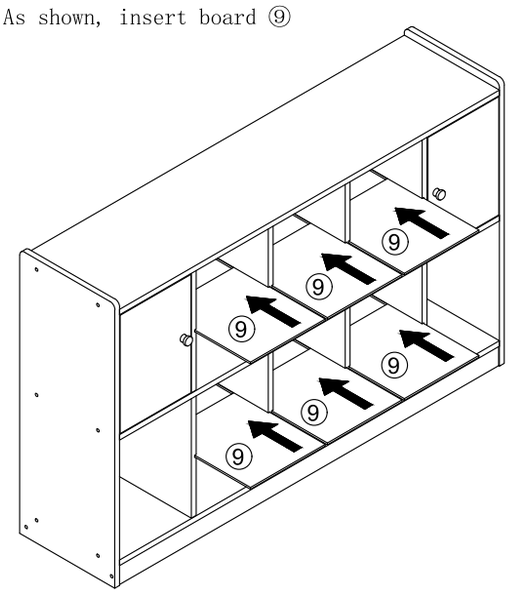

STEP:17

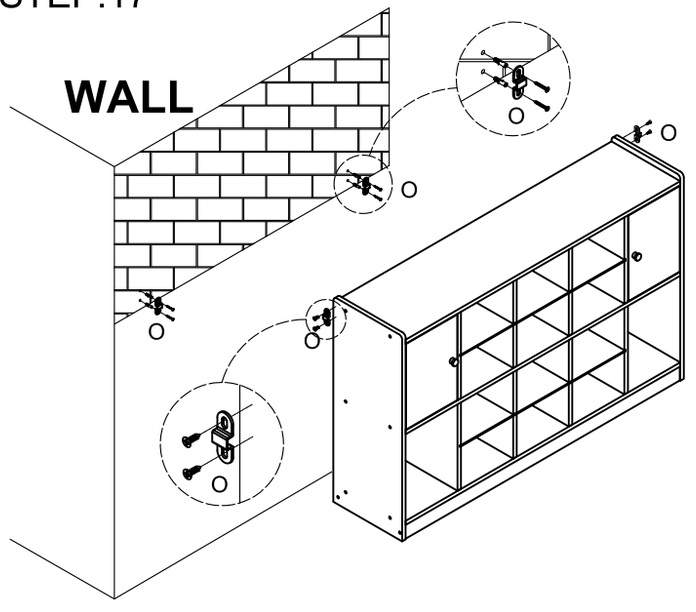

Please install the anti-tip accessories as needed.

O×2

STEP:18

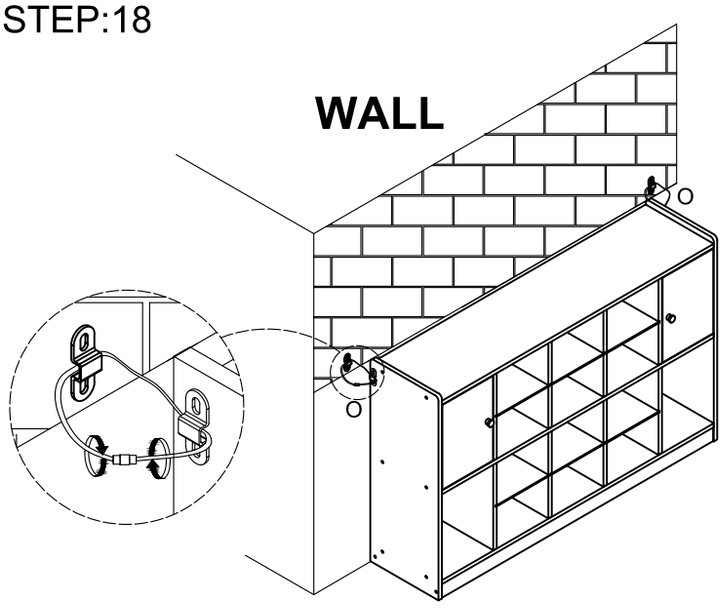

Please install the anti-tip accessories as needed.

STEP:19

Expand component J.

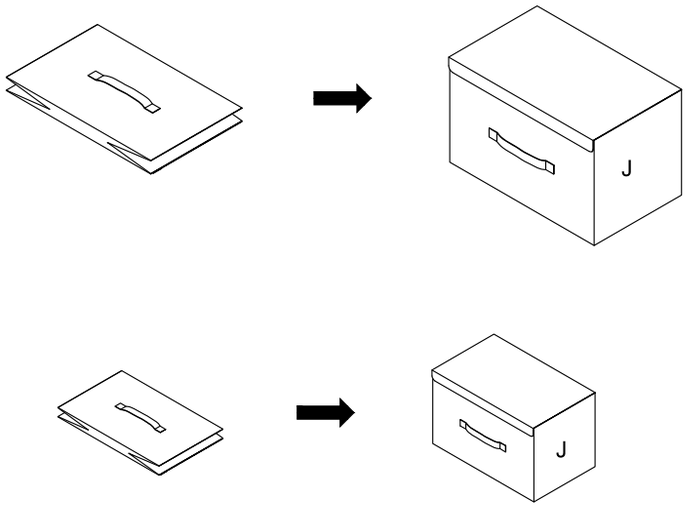

J×1

STEP:20

Place the component on top.

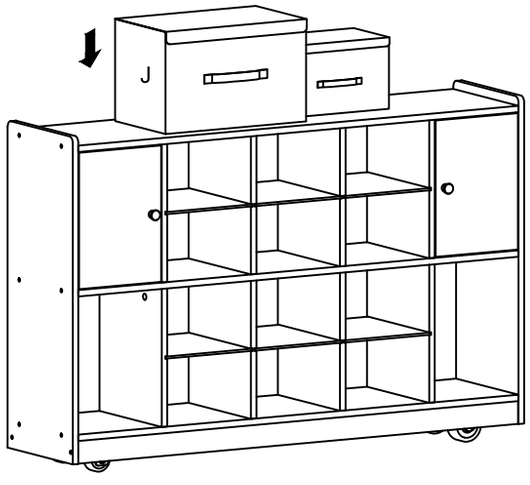

STEP:15

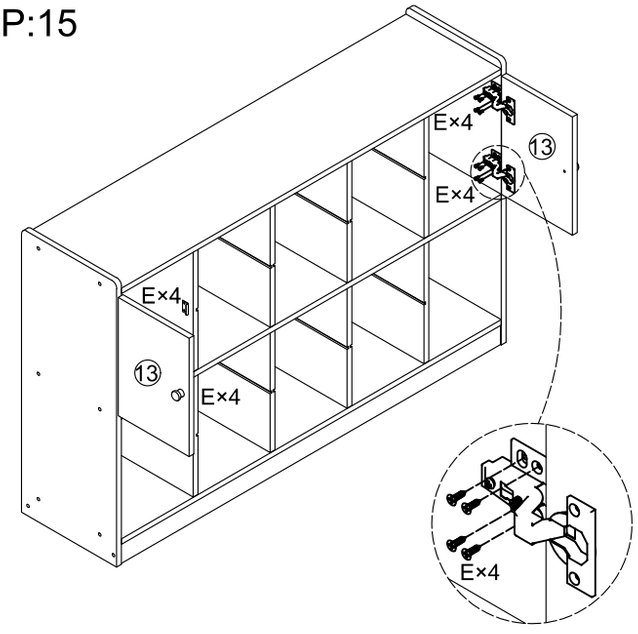

As shown in the figure, use component E to fix the ⑬ board to the cabinet body.

E×16

STEP:16

As shown, insert board ⑨

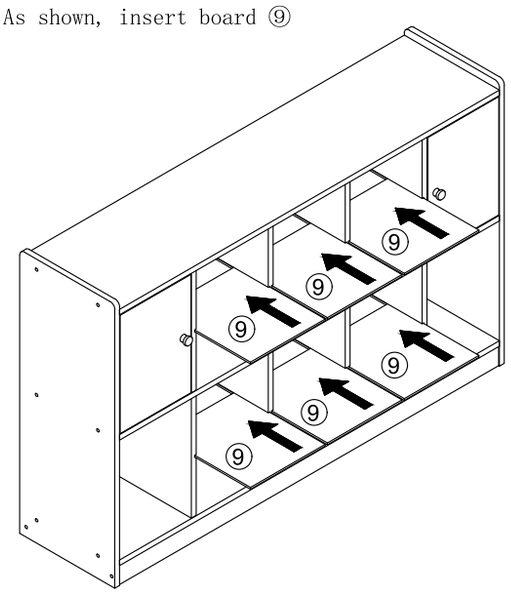

STEP:17

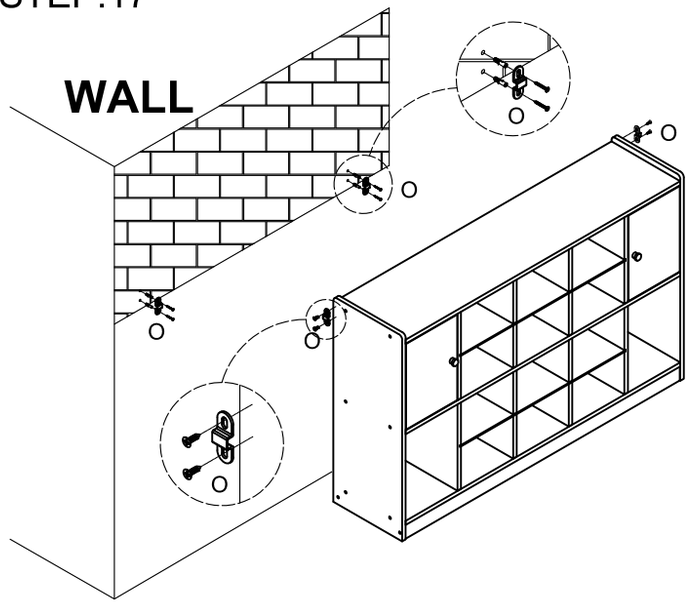

Please install the anti-tip accessories as needed.

O×2

STEP:18

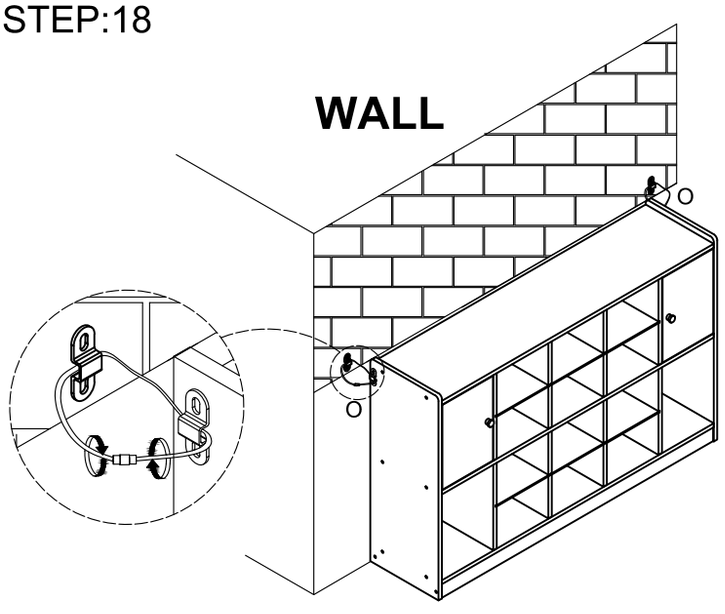

Please install the anti-tip accessories as needed.

STEP:19

Expand component J.

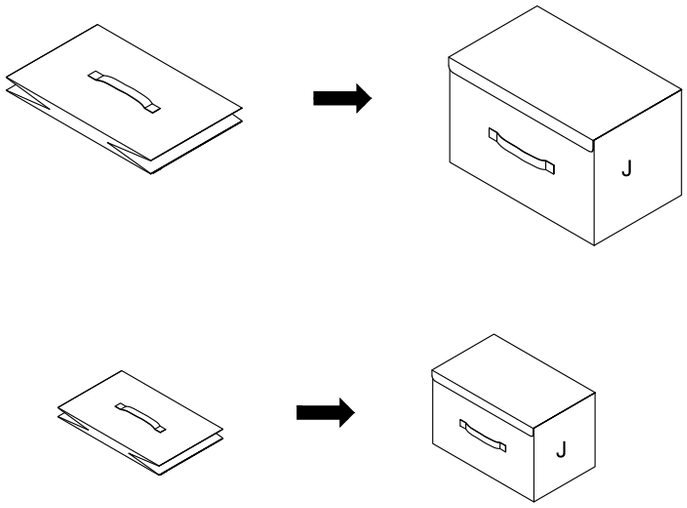

J×1

STEP:20

Place the component on top.

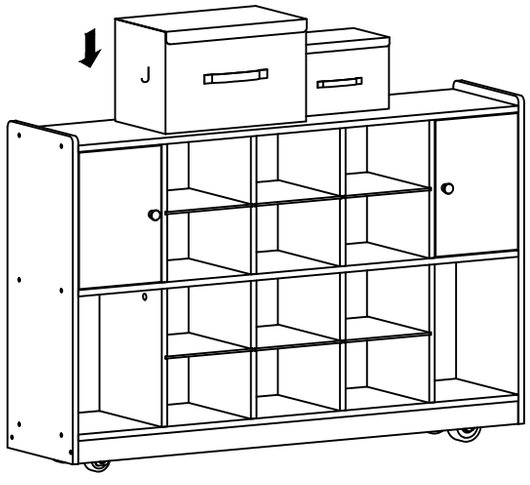

STEP:15

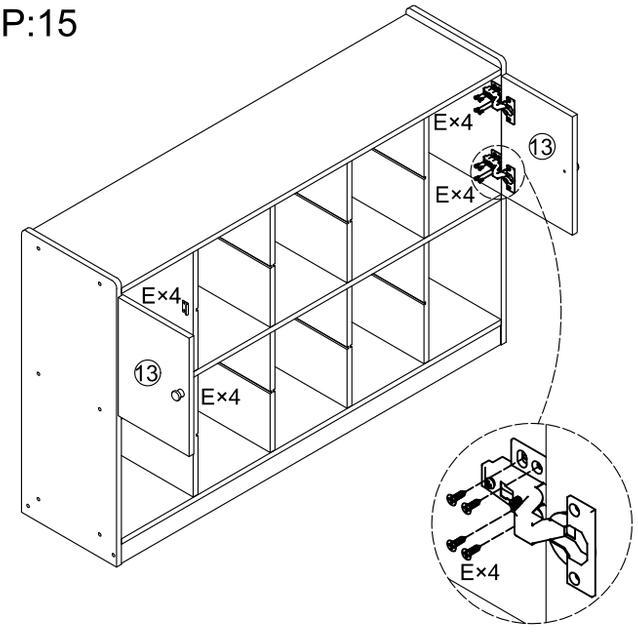

As shown in the figure, use component E to fix the ⑬ board to the cabinet body.

E×16

STEP:16

As shown, insert board ⑨

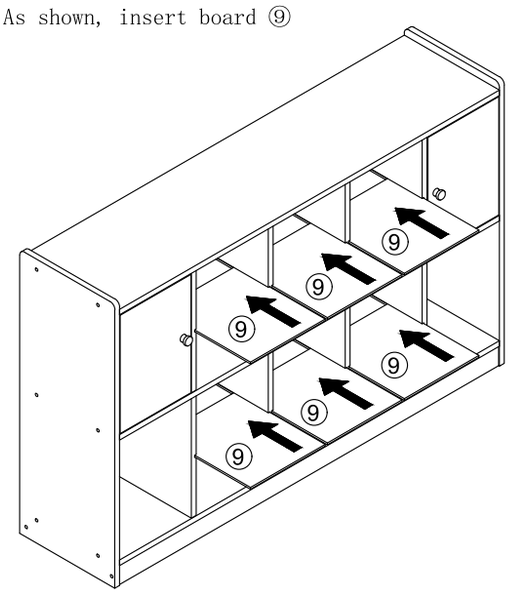

STEP:17

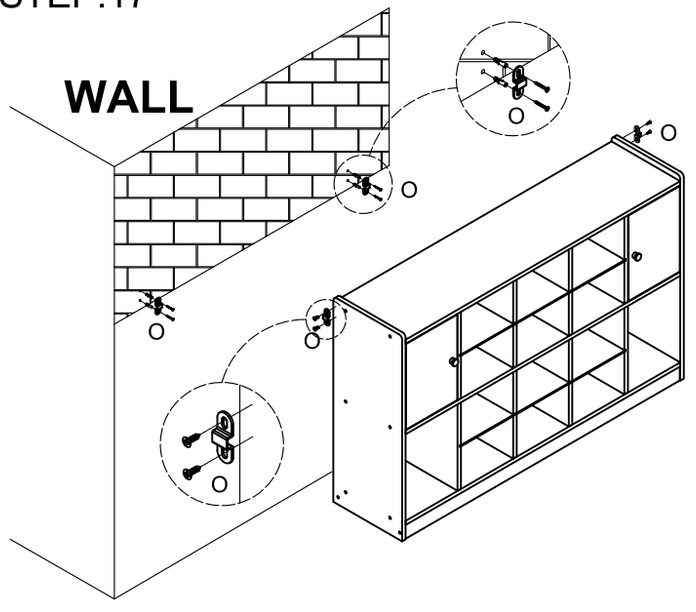

Please install the anti-tip accessories as needed.

O×2

STEP:18

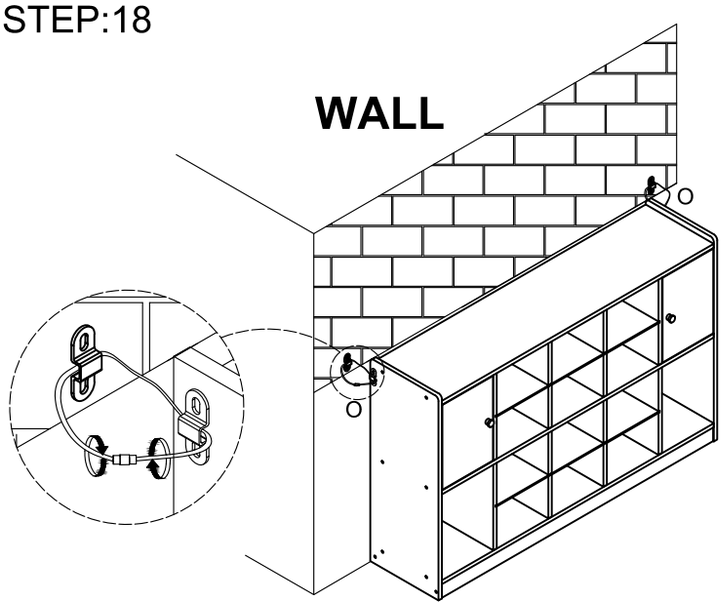

Please install the anti-tip accessories as needed.

STEP:19

Expand component J.

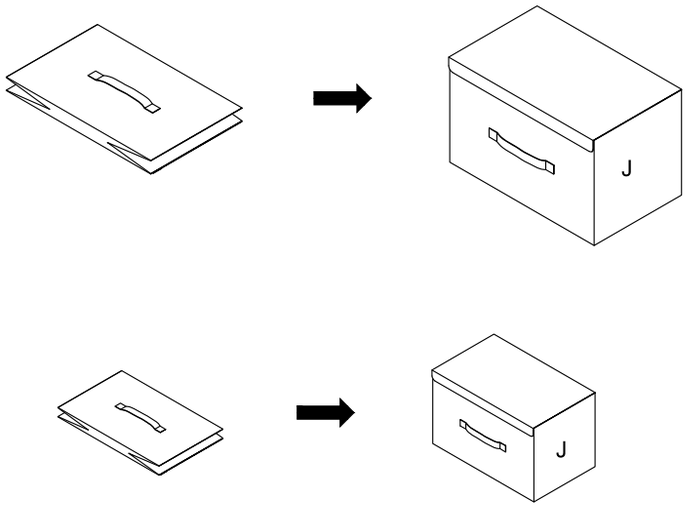

J×1

STEP:20

Place the component on top.

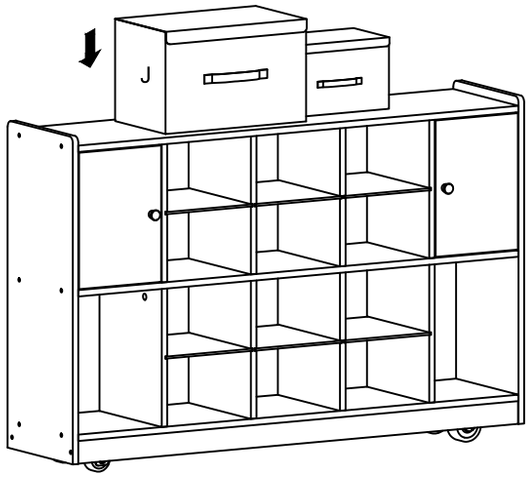

GARVEE

support@garvee.com

Made In China