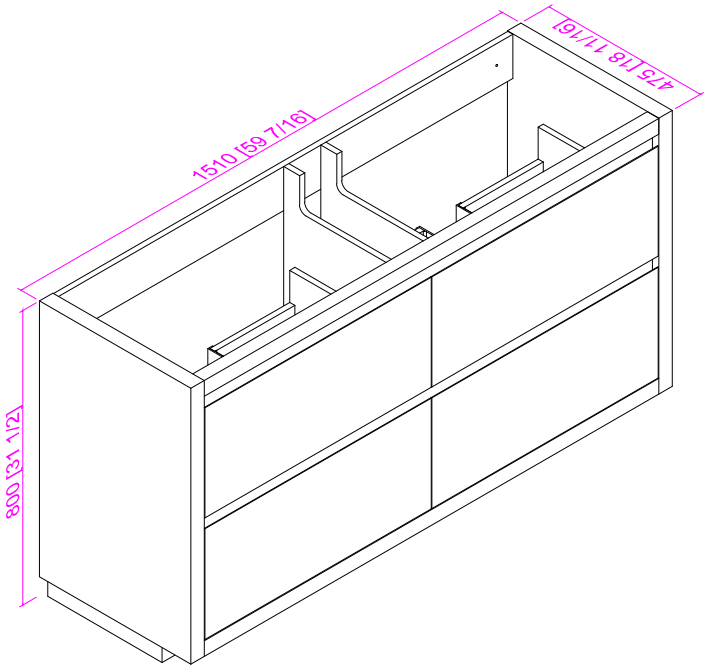
1510 [59 7/16]
475 [18 11/16]
800 [31 1/2]

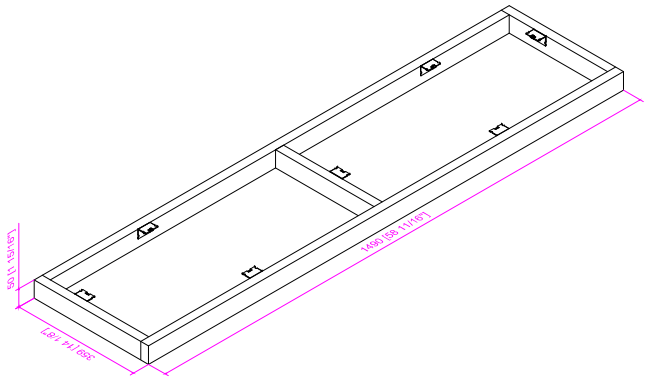
1490 [58 11/16]
369 [14 1/2]
59/16 [15/16]

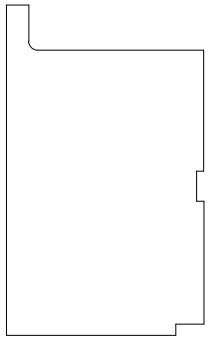

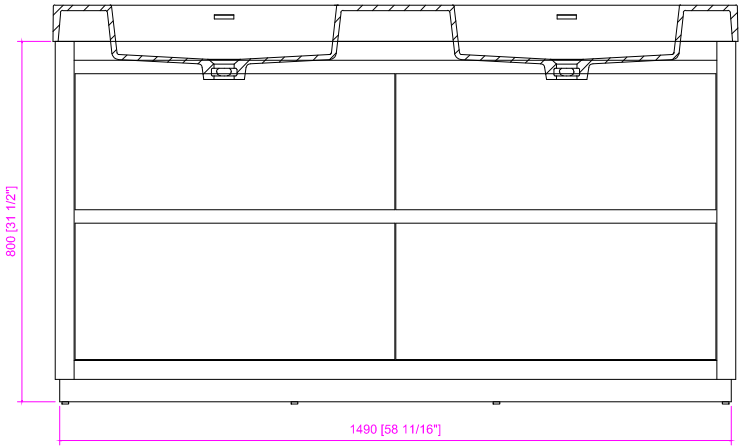
800 [31 1/2"]
1490 [58 11/16"]

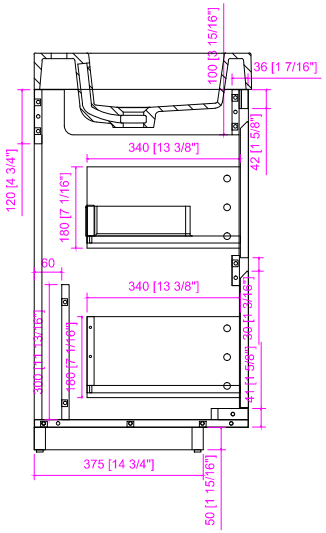
100 [3 15/16"]
36 [1 7/16"]
42 [1 5/8"]
340 [13 3/8"]
120 [4 3/4"]
180 [7 1/16"]
60
340 [13 3/8"]
300 [11 13/16"]
180 [7 1/16"]
42 [1 5/8"]
375 [14 3/4"]
50 [1 15/16"]

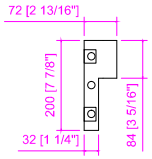
72 [2 13/16"]
200 [7 7/8"]
32 [1 1/4"]
84 [3 5/16"]

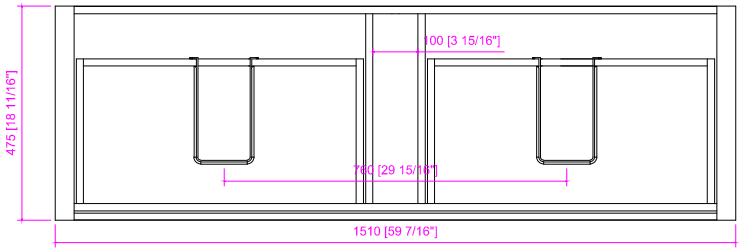
100 [3 15/16"]
475 [18 11/16"]
760 [29 15/16"]
1510 [59 7/16"]