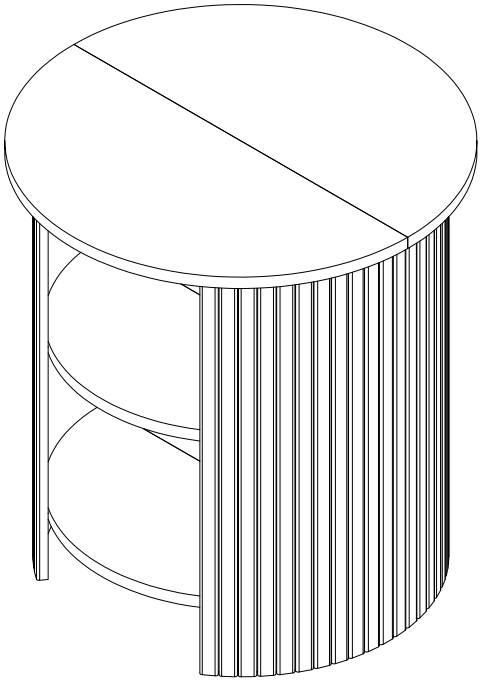

Warning instructions:
1. Assembly should to be carried out by a competent adult only.
2. Regularly check all parts firmly fixed to ensure the furture for safe use.
3. Wipe clean only.
4. The warning sticker on the furniture is a mandatory requirement in Australia, and it can be removed by wet cloth.

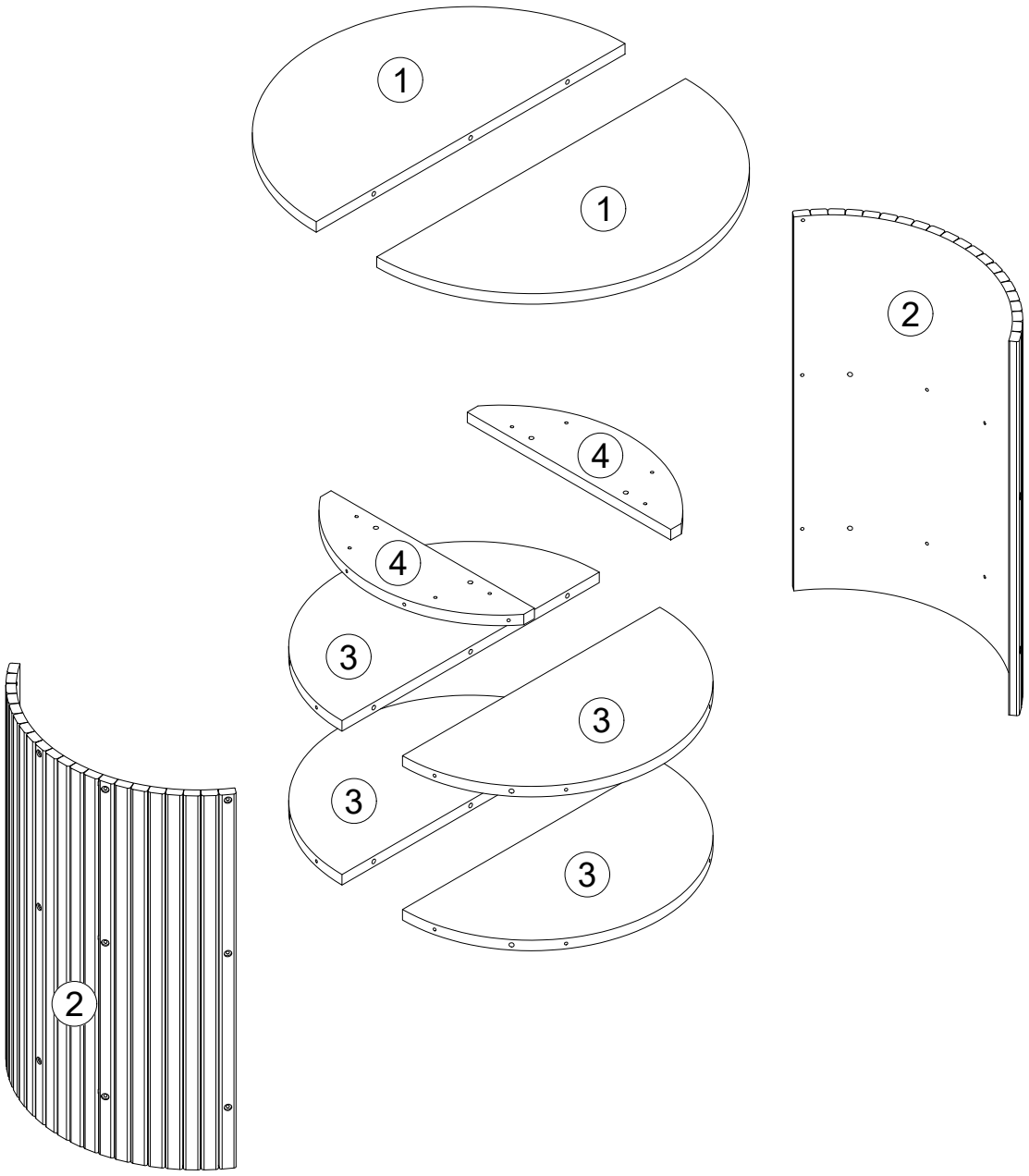
1
1
2
4
4
3
3
3
3
2

A 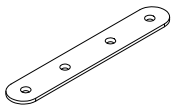 6PCS	B  M4x12mm 24+2PCS	C 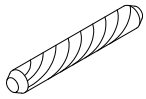 Ø6x30mm 17+1PCS
D 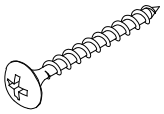 Ø4x35mm 24+2PCS	E 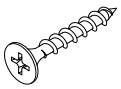 Ø4x25mm 8PCS	F  6PCS
G  24+2PCS	H  Ø6x15mm 4PCS	I 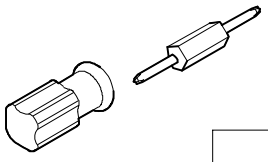 1PC

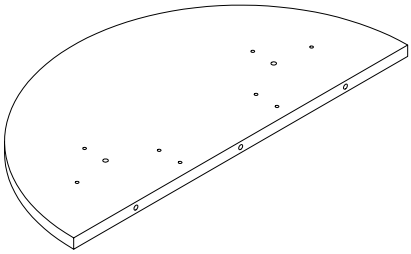

1 x 2

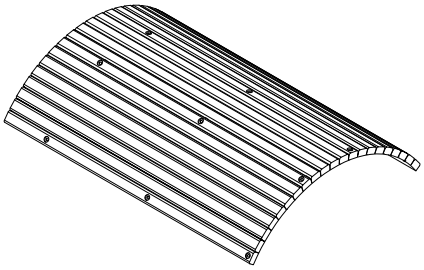

2 x 2

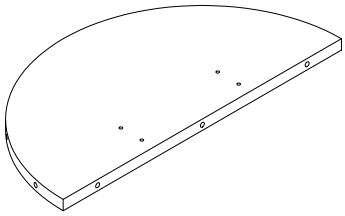

3 x 2

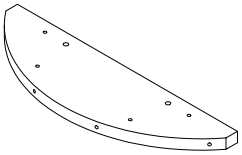

4 x 2

01

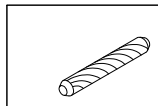

C x 9

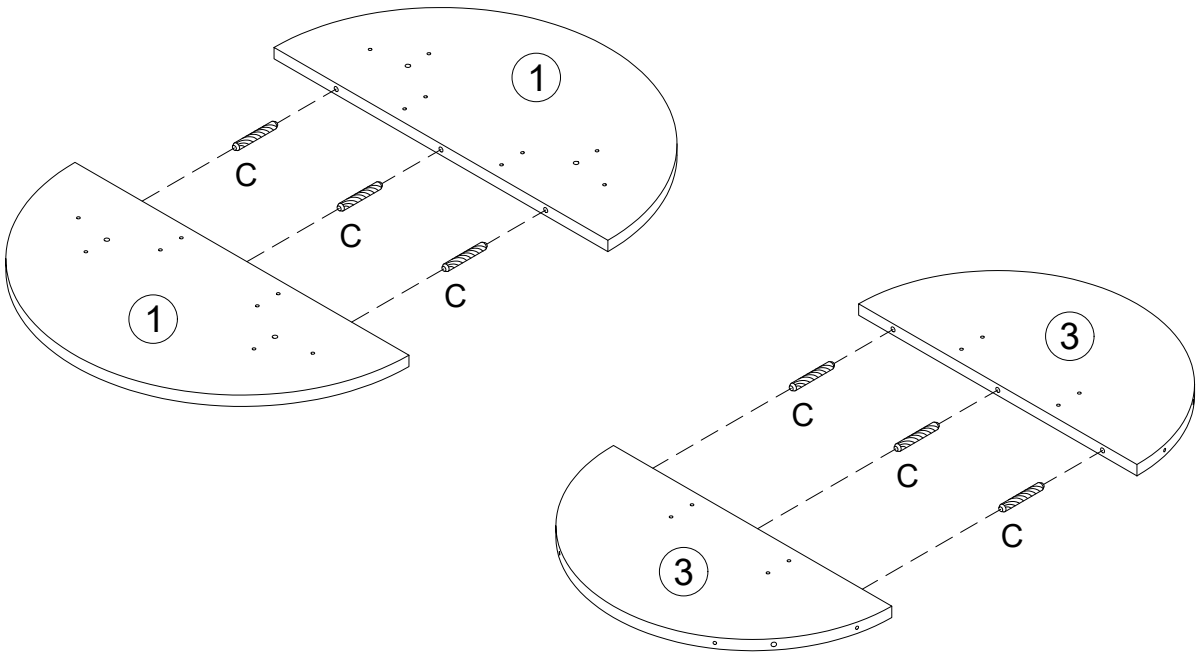

x2

02

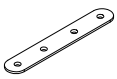

A x 6



B x 24

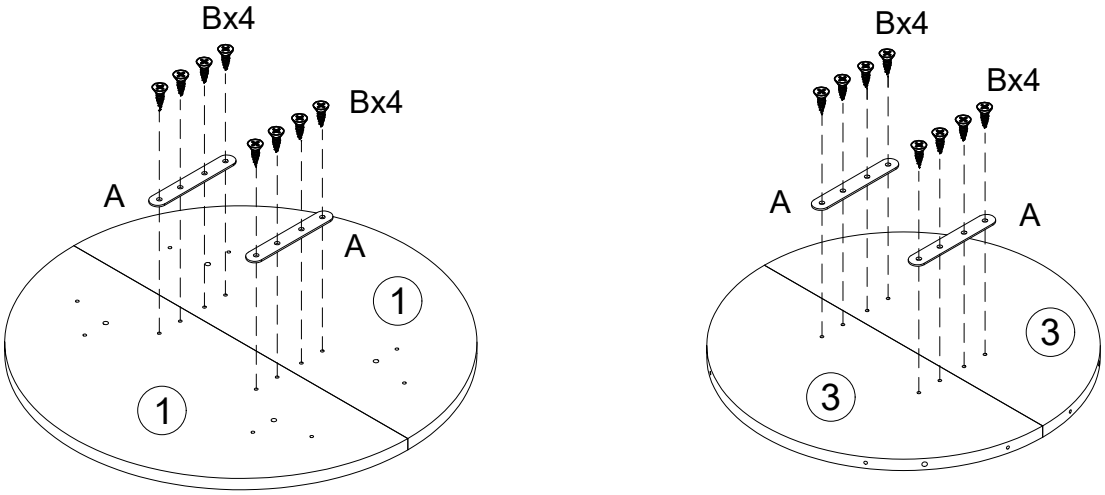

x2



C x 4

03

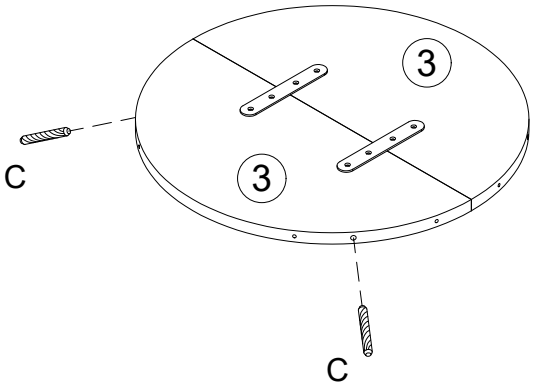

x2

04

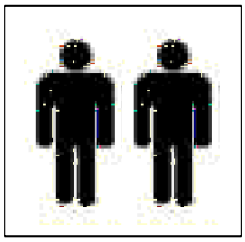

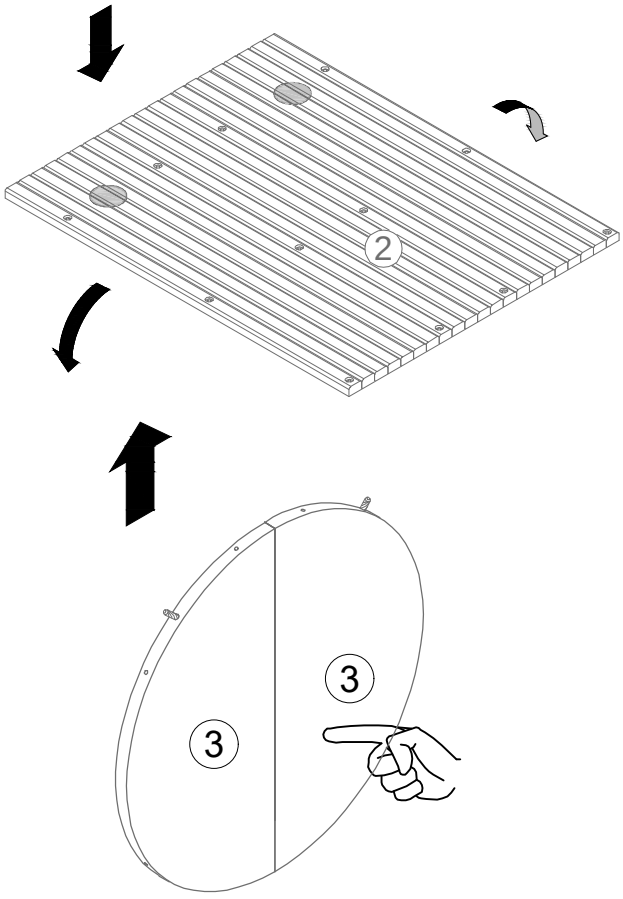

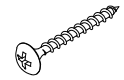

D x 4

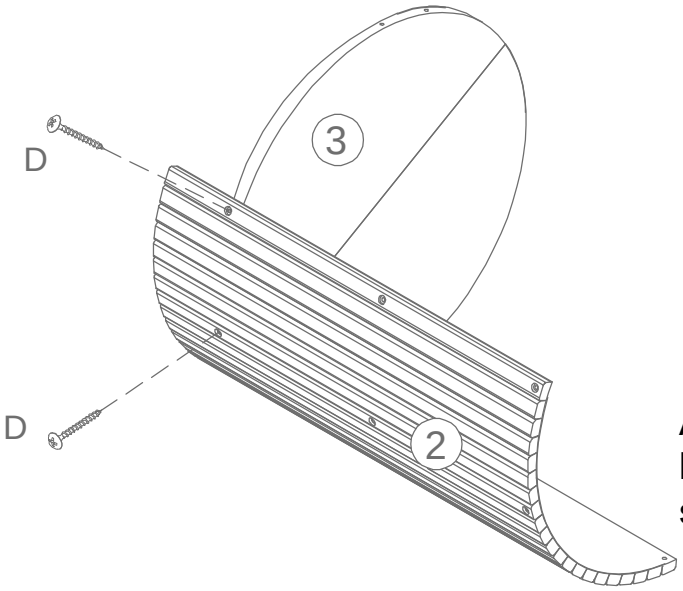

Align the screw with the hole, then tighten the screw.

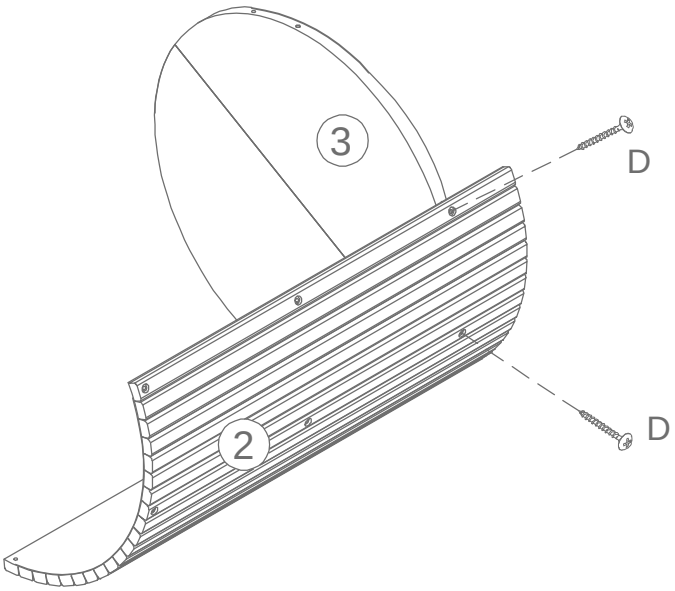

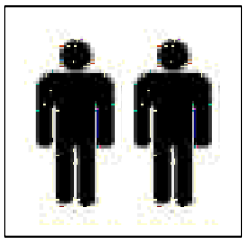

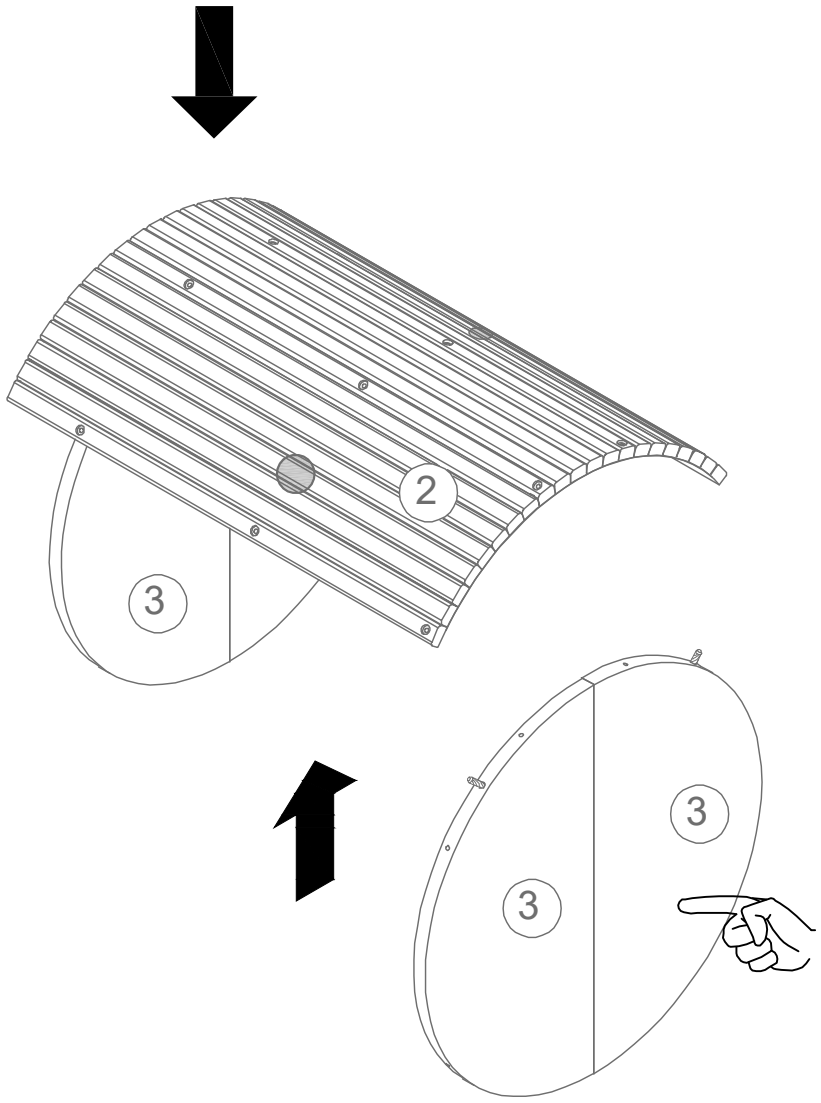
2
3
3
3

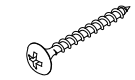

D x 4

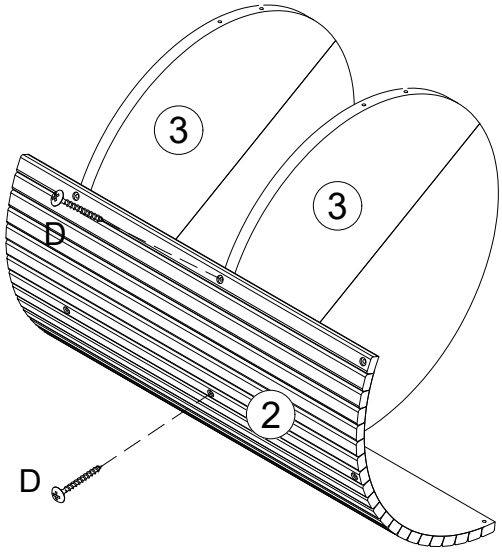

Align the screw with the hole, then tighten the screw.

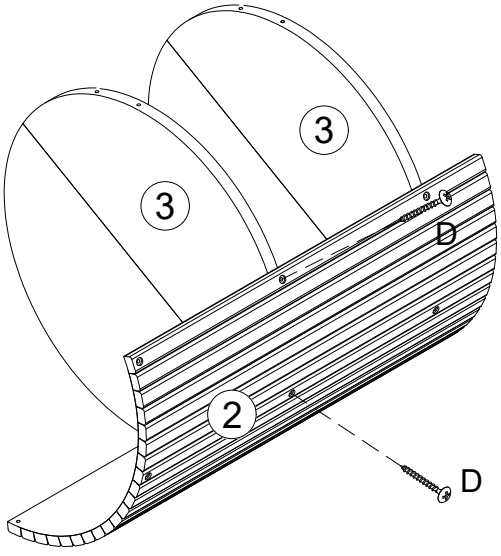



C x 4

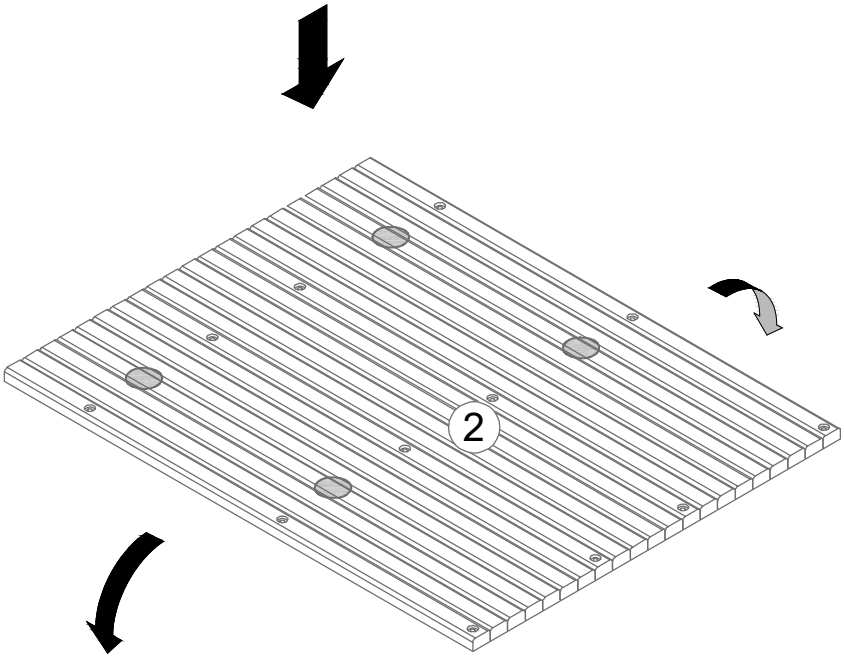

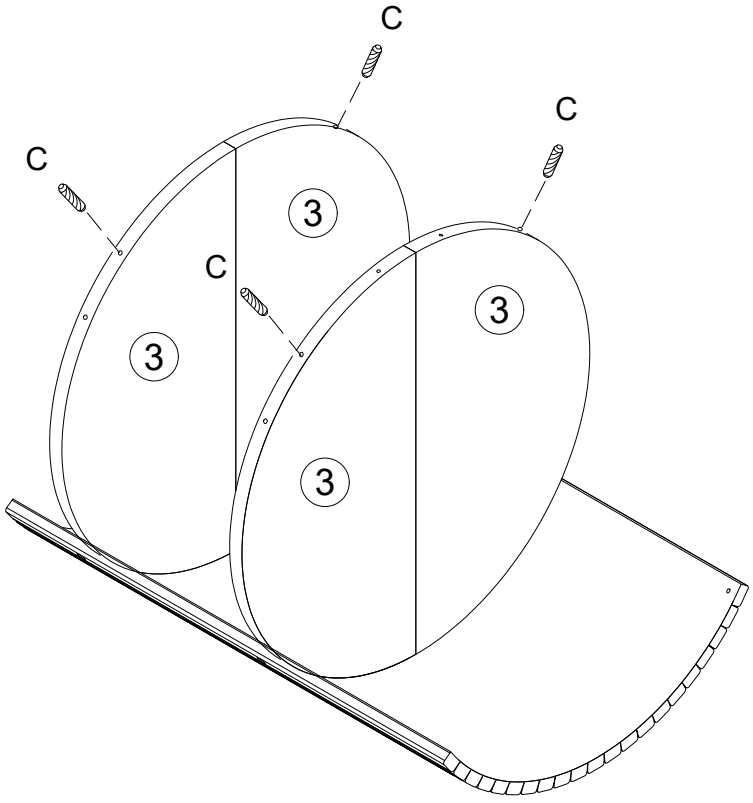

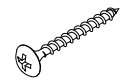

D x 8

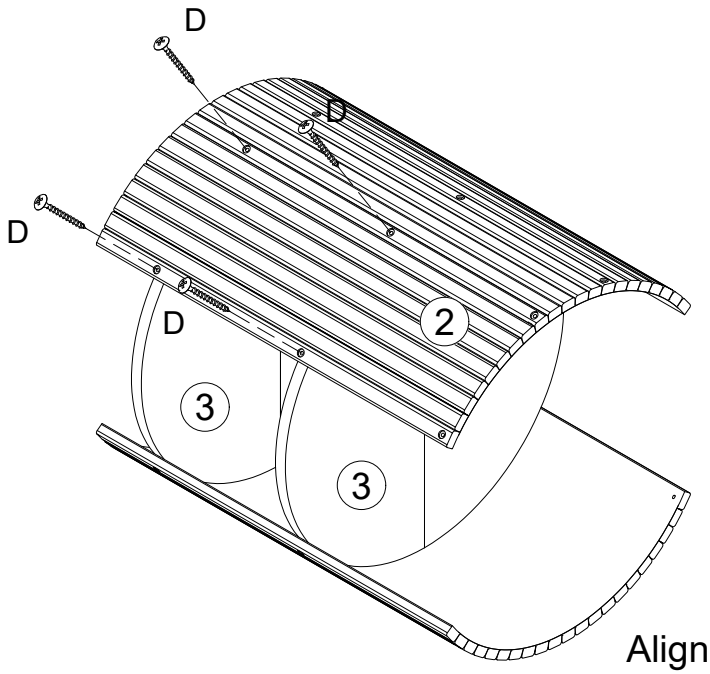

Align the screw with the hole, then tighten the screw.

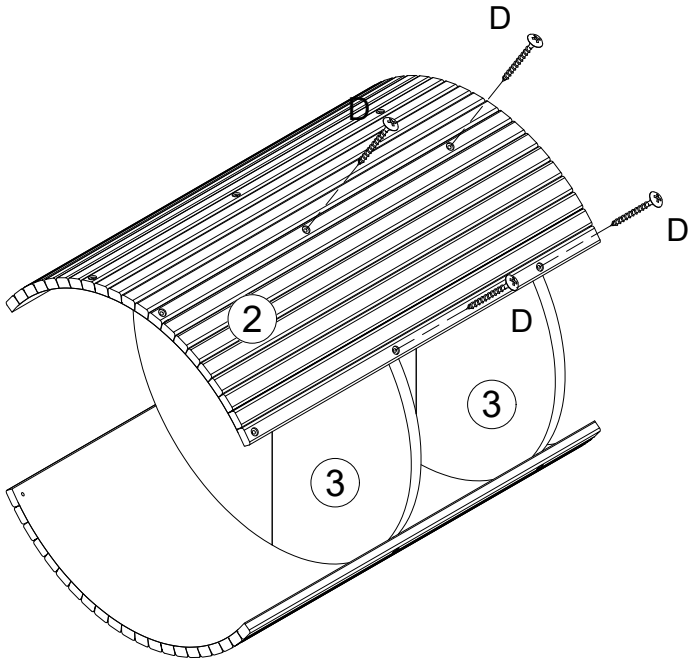

E x 8	H x 4

10

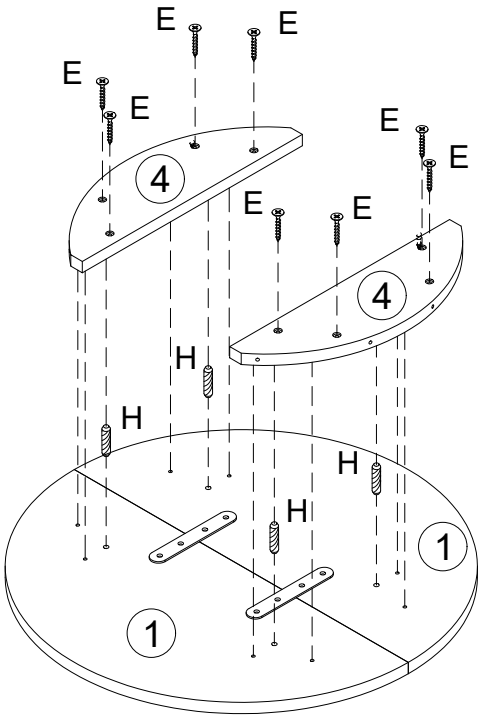

11

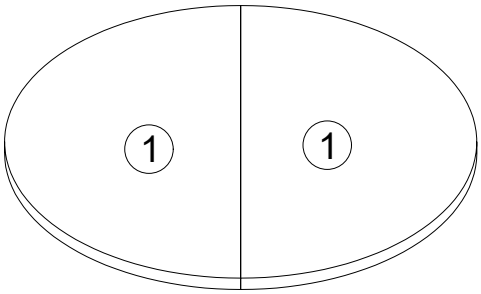

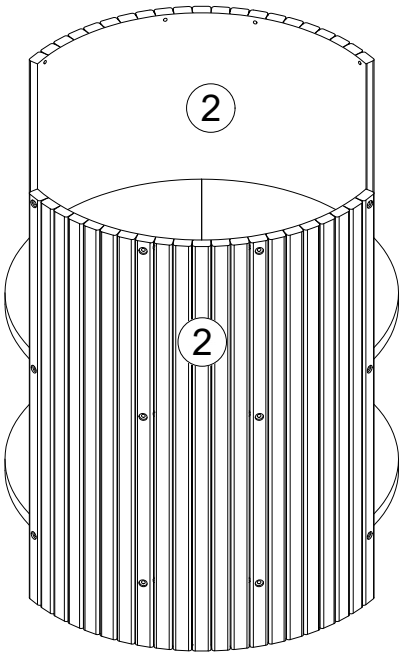

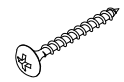

D x 8

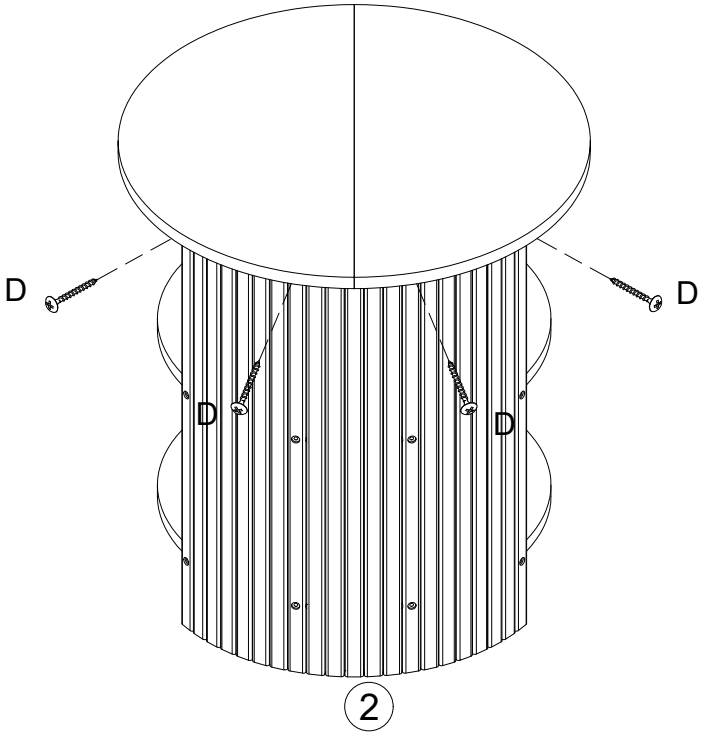

Align the screw with the hole, then tighten the screw.

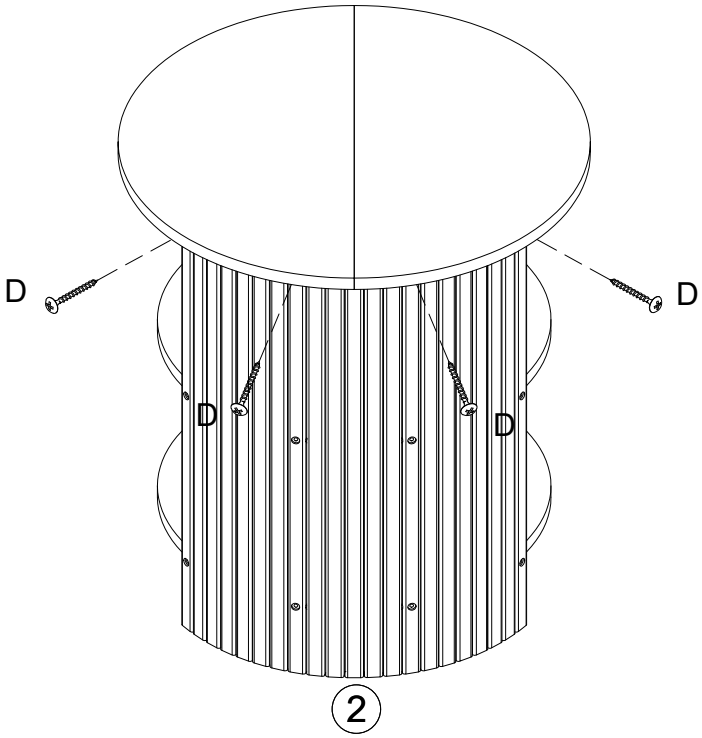

13

F x 6

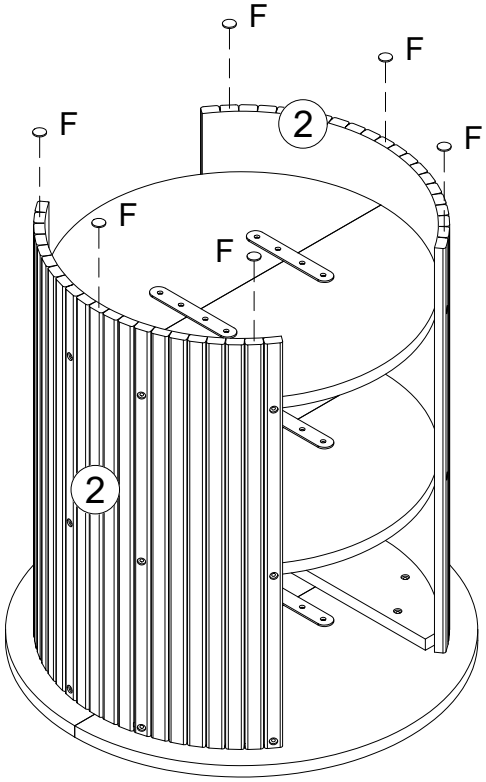

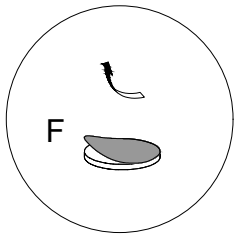

14

G x 24

