Assembly Instructions

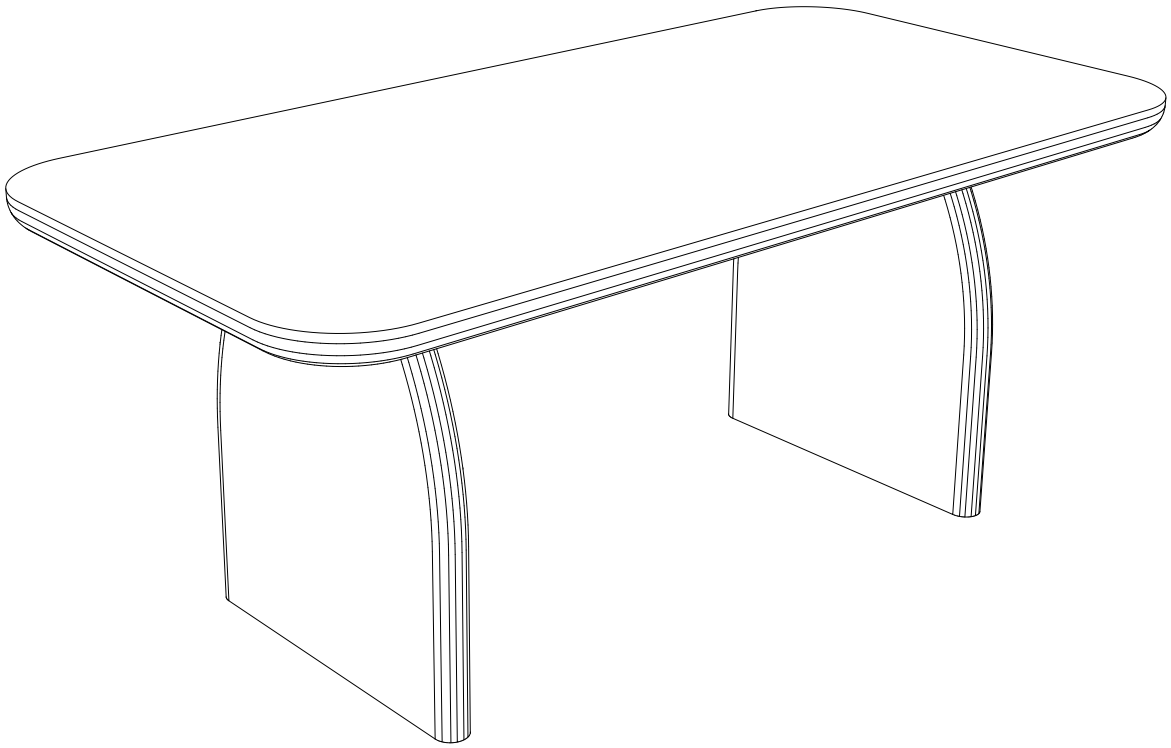

Coffee Table

Model No.

HOGA-F2088/F2195

Contact Us

We're here to help you.



Your satisfaction is our top priority. If you encounter any issues with this product, such as missing or damaged parts, we're here to help. Please retain the original packaging and take photos of the packaging and the product, then contact us as soon as possible.

Warm Tips

1. Carefully read these instructions and keep them for future reference.
2. Check the parts list and confirm everything's there before starting assembly.
3. When assembling, put all parts on a soft, smooth surface like a carpet to avoid scratches.
4. Don't fully tighten screws until all parts are confirmed in place to avoid misalignment.

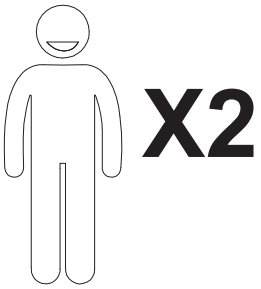

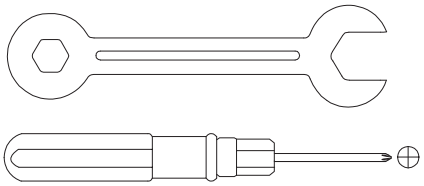

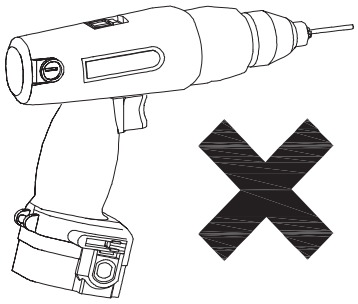

We recommend using hand tools for assembly.

If an electric screwdriver is used, reduce power and torque to avoid damage to the product.

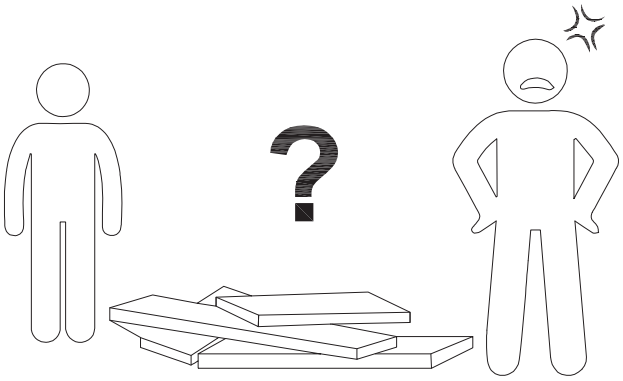

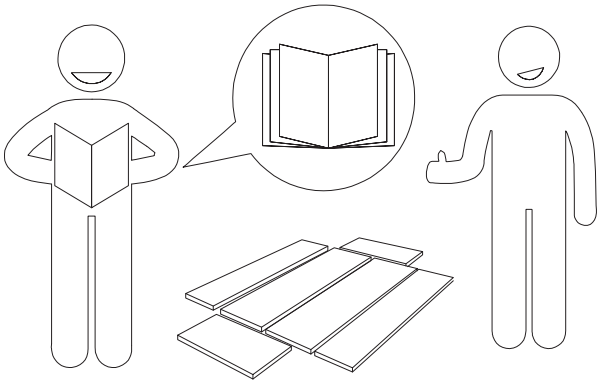

AVOID SCRATCHES

In order to avoid scratching, this furniture should be assembled on a soft surface, such as a rug.

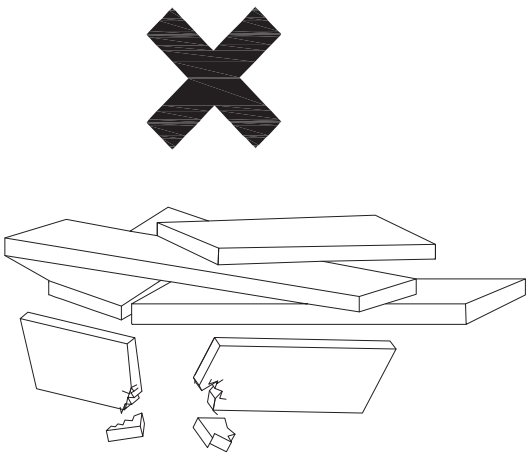

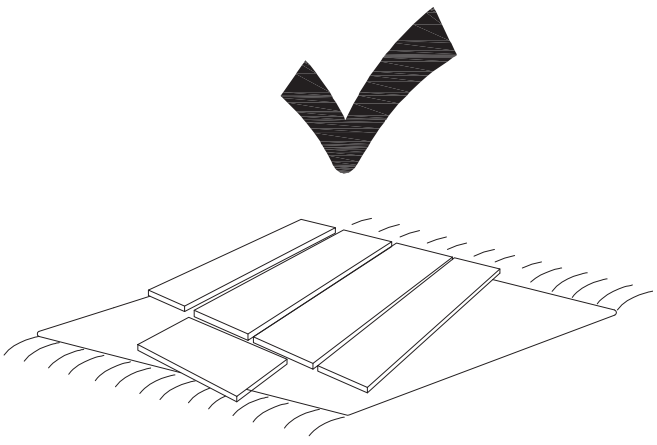

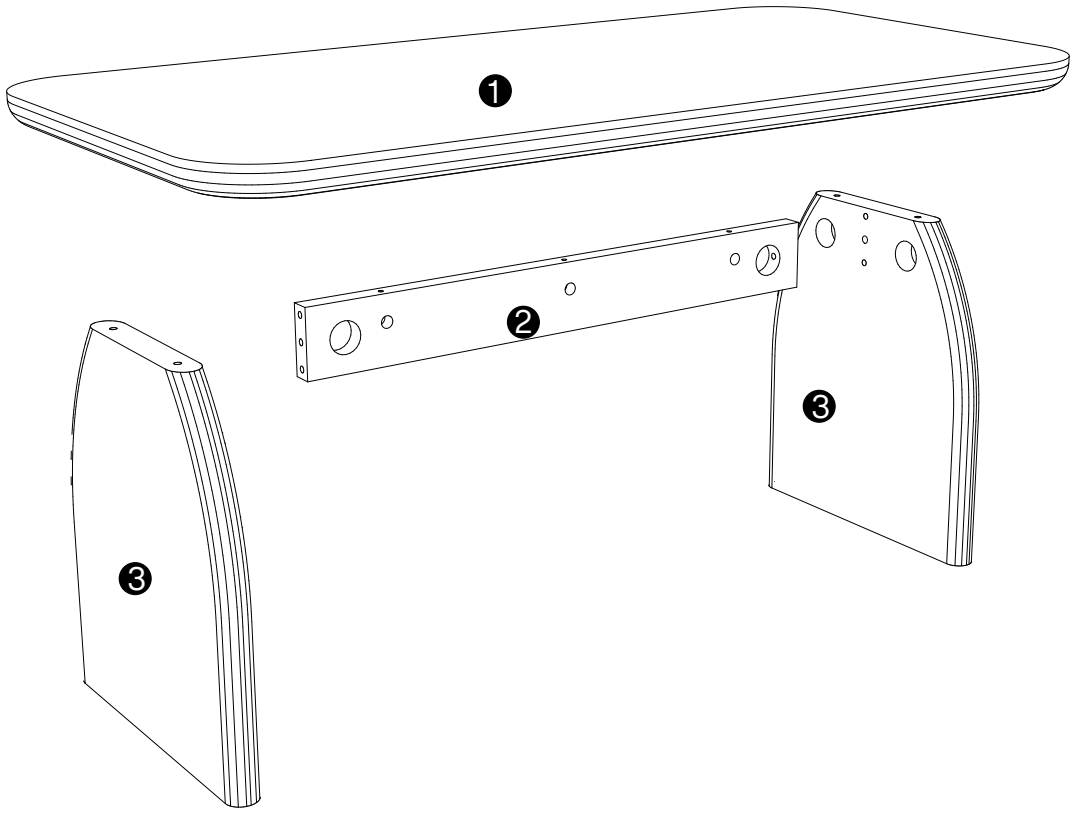

⚠ Caution

Make sure all parts are included. Most board parts are labeled or stamped on the raw edge.
Contact us for a free replacement if you encounter any damaged or missing parts.

Parts List

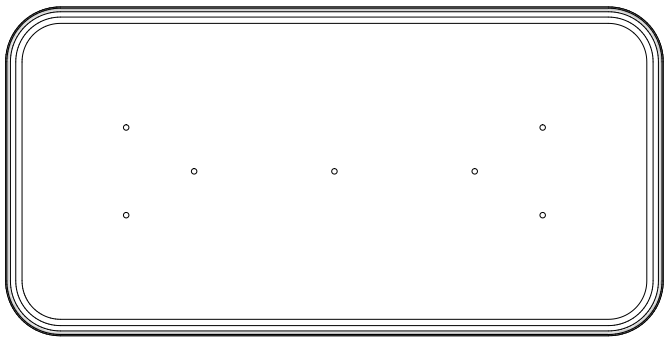

❶ 1pc

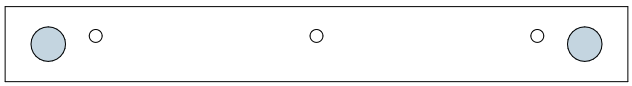

❷ 1pc

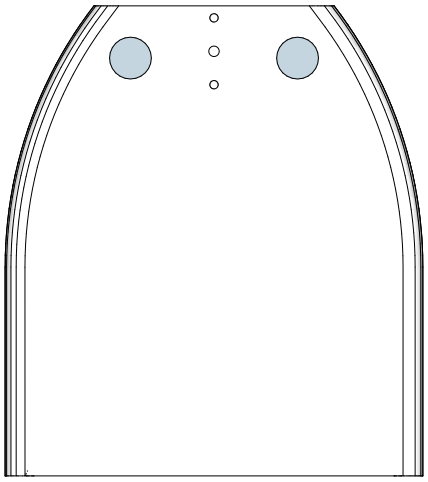

❸ 2 pcs

Hardware List

 Ⓐ Ø15x12mm 3 pcs	 Ⓑ M6x40mm 3 pcs	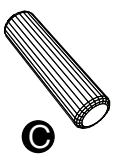 Ⓒ M8x30mm 4 pcs	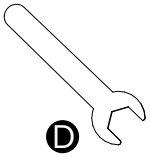 Ⓓ 1pc	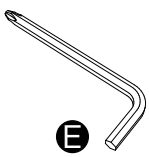 Ⓔ 1pc	 Ⓕ M6x15mm 4 pcs	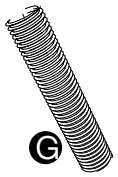 Ⓖ M8x70mm 6 pcs
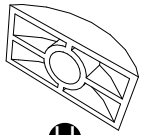 Ⓗ 6 pcs	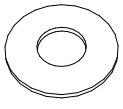 Ⓘ 6 pcs	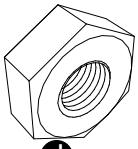 Ⓙ M8 6 pcs	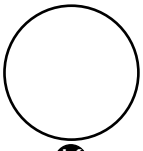 Ⓚ Ø45 6 pcs	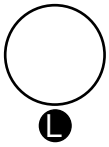 Ⓛ Ø22 3 pcs		

Installation of Cams and Pins

Read each step carefully before starting. Each step of instruction should be performed in the correct order. If these steps are not followed in sequence, assembly difficulties may occur.

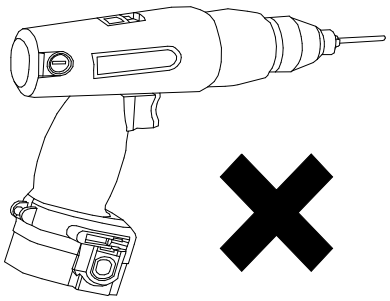

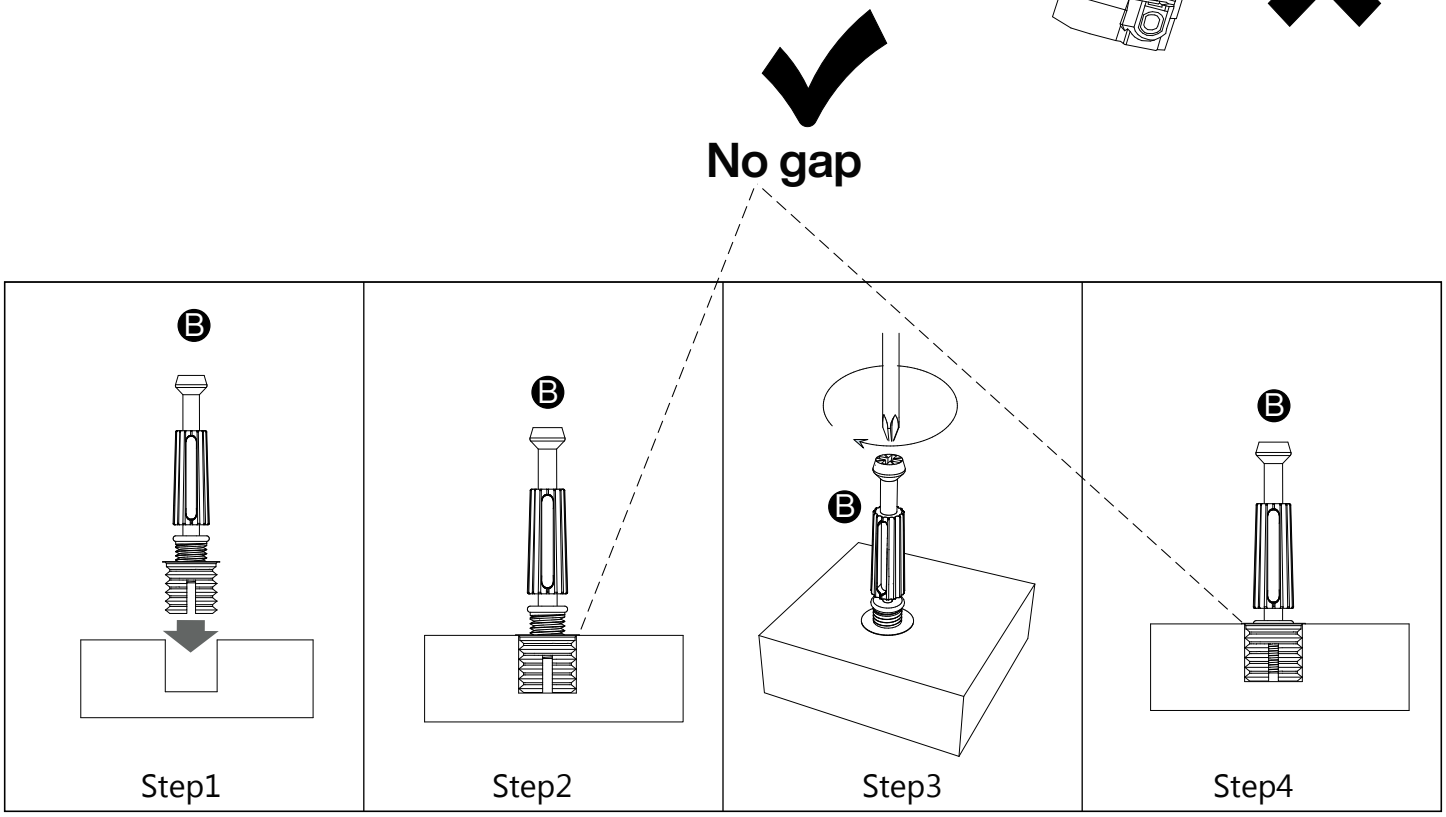

Screw the pin into the hole. Set the cams correctly by aligning the head of the cams with the lock pins.Lock the cam by turning the cam head with a screwdriver until it is tightened. Please do not use an electric screwdriver to assemble the unit.

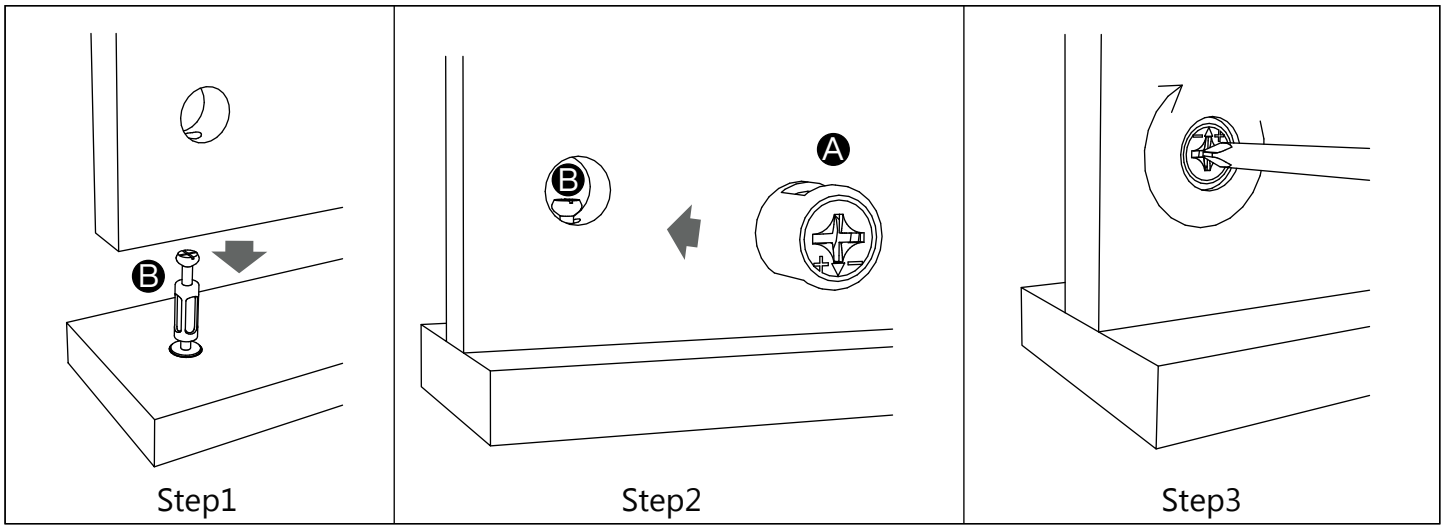

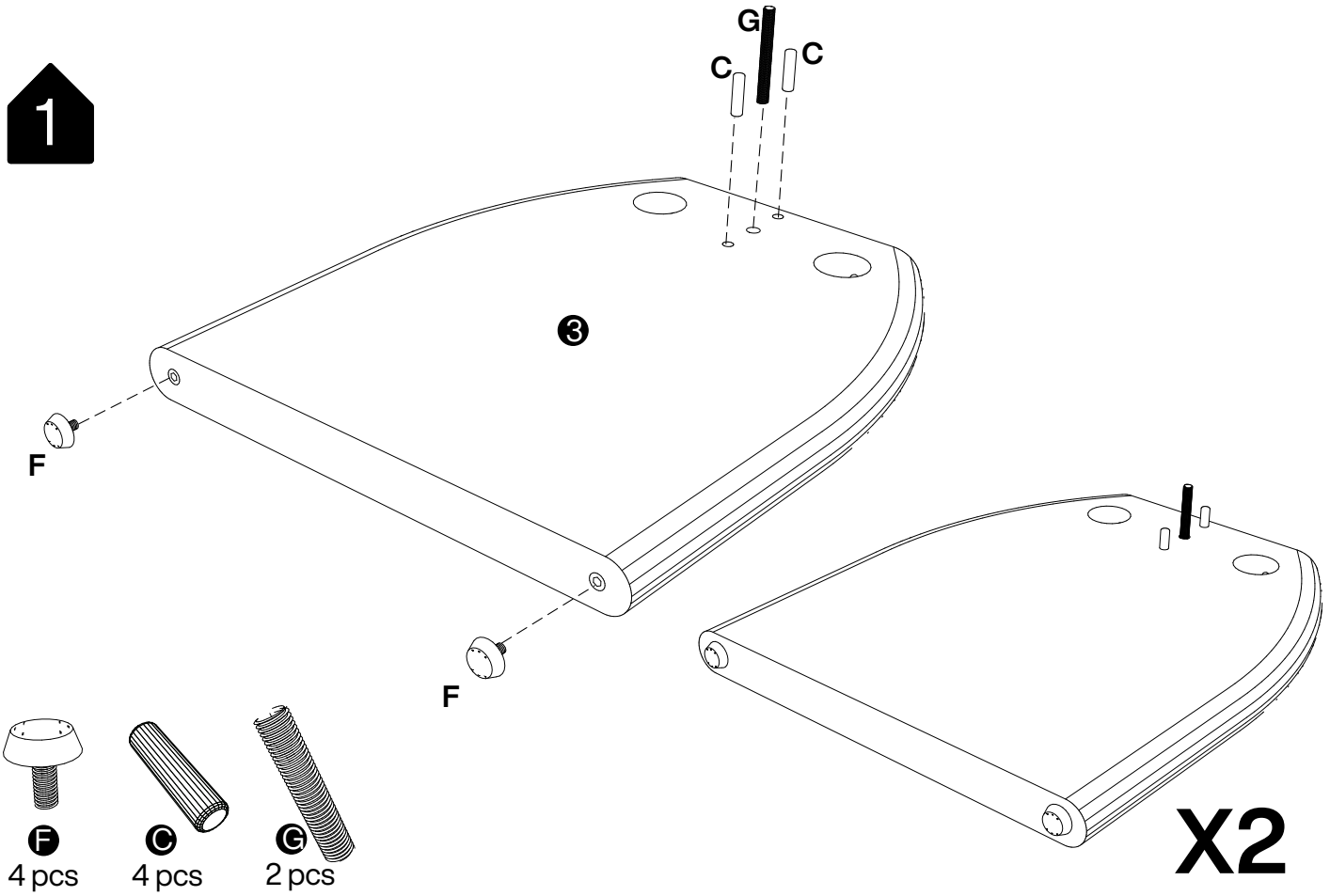
1
G
C
C
3
F
F
F
4 pcs
C
4 pcs
G
2 pcs
X2

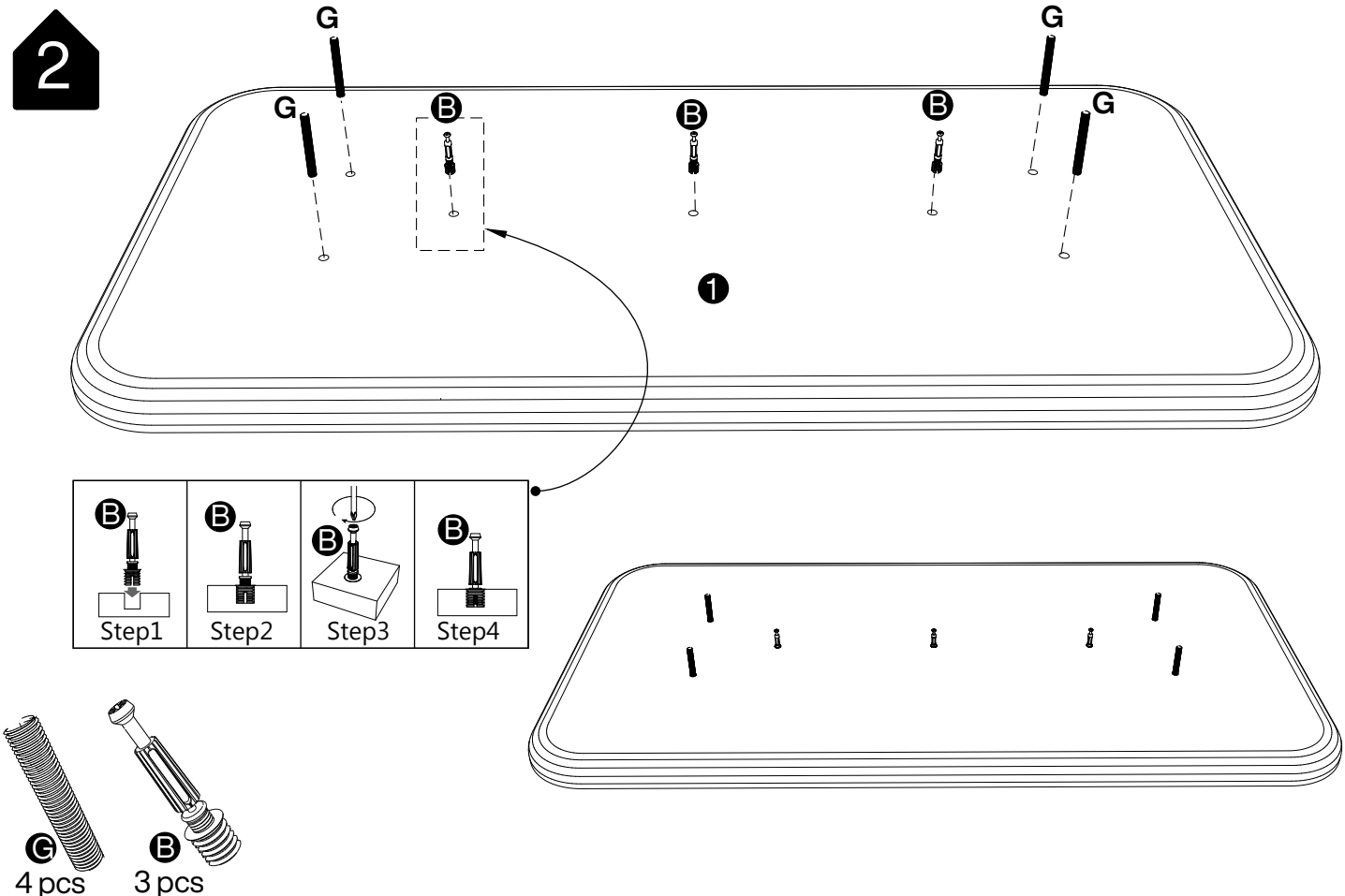
2
G
G
G
G
B
B
B
1
B
Step1
B
Step2
B
Step3
B
Step4
G
4 pcs
B
3 pcs

3

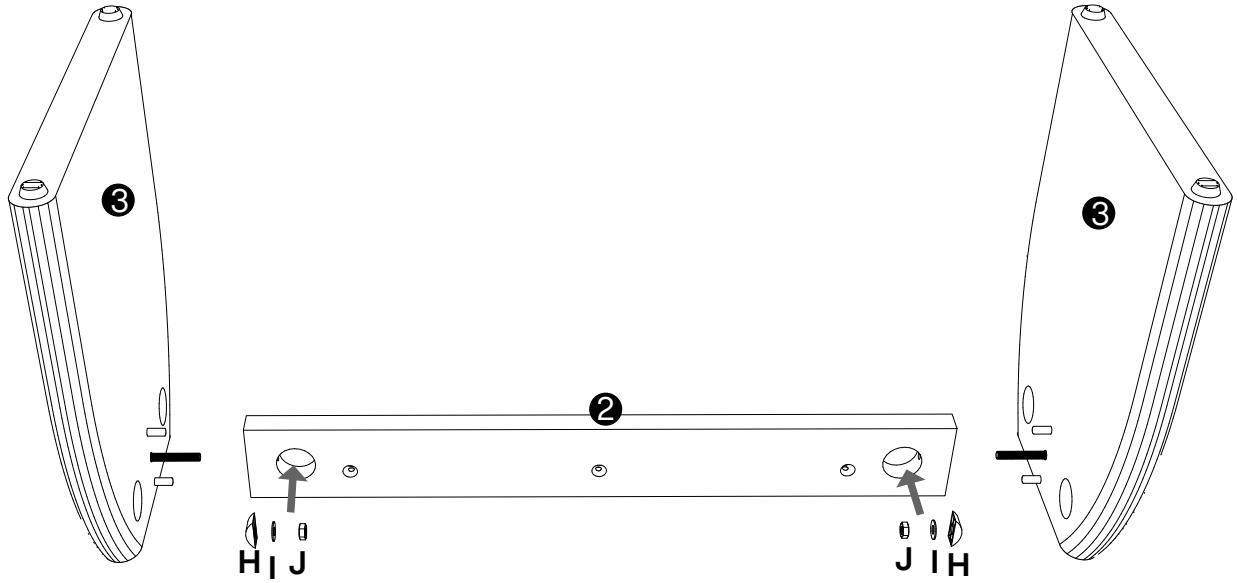

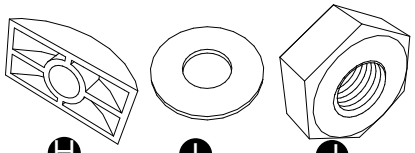

❽ 2 pcs ❾ 2 pcs ❿ 2 pcs

4

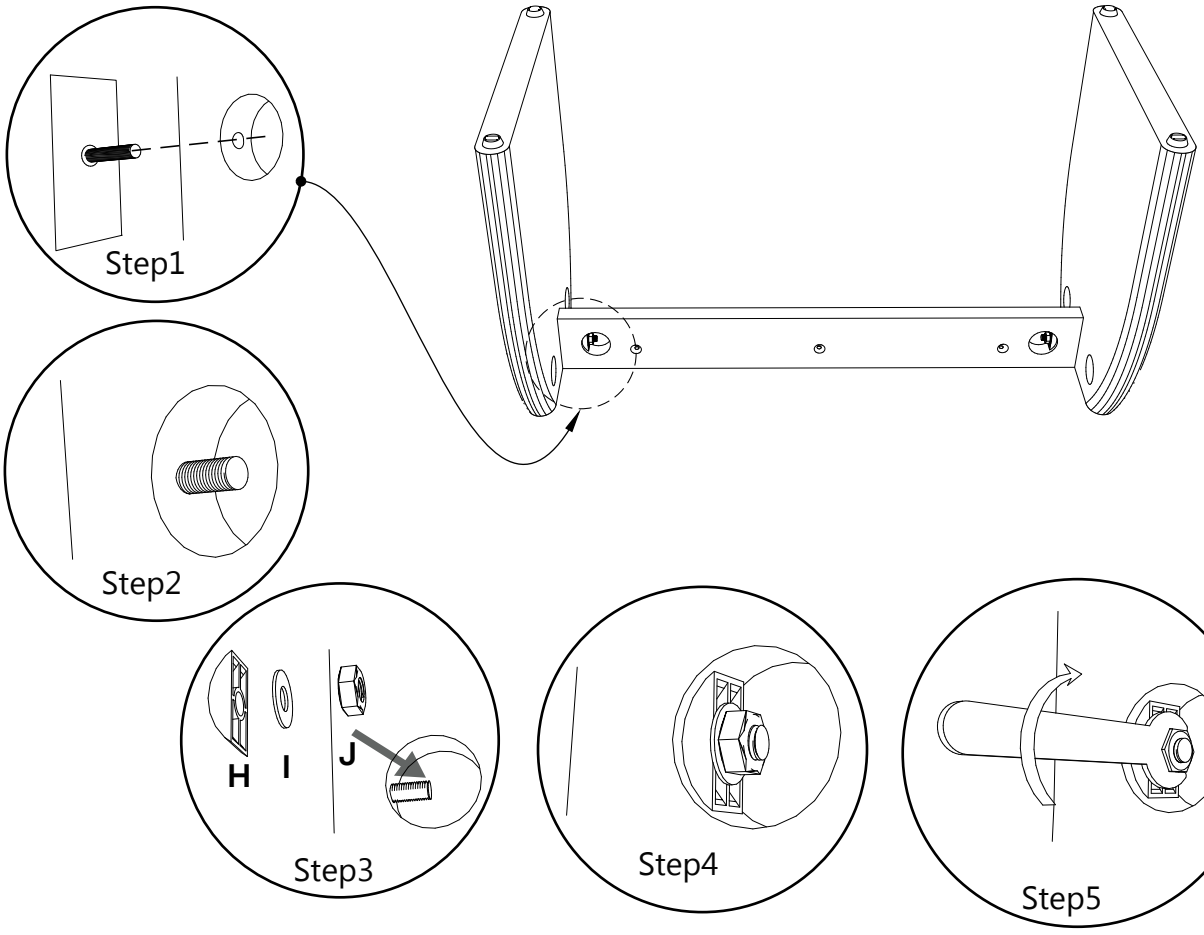

5

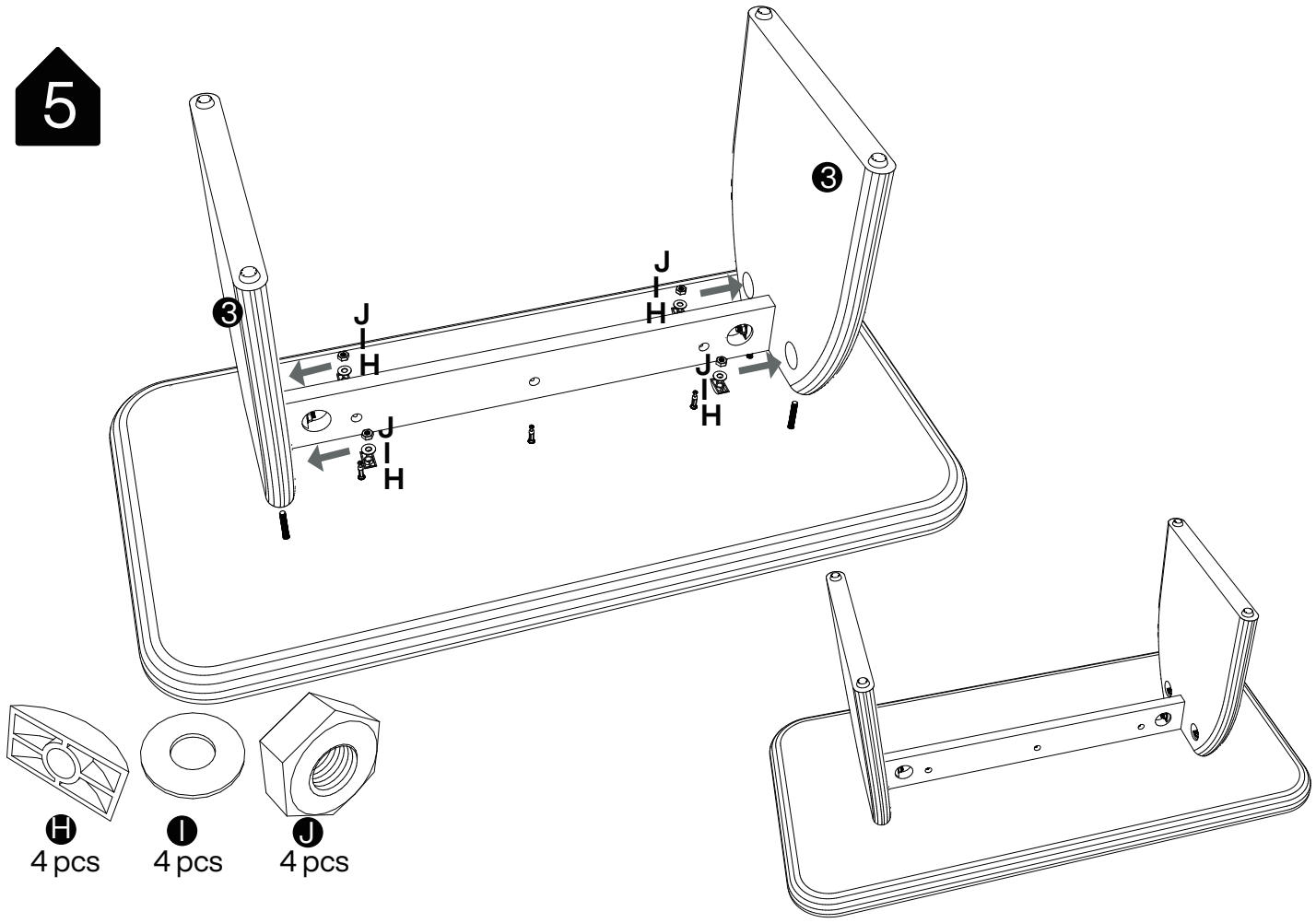

6

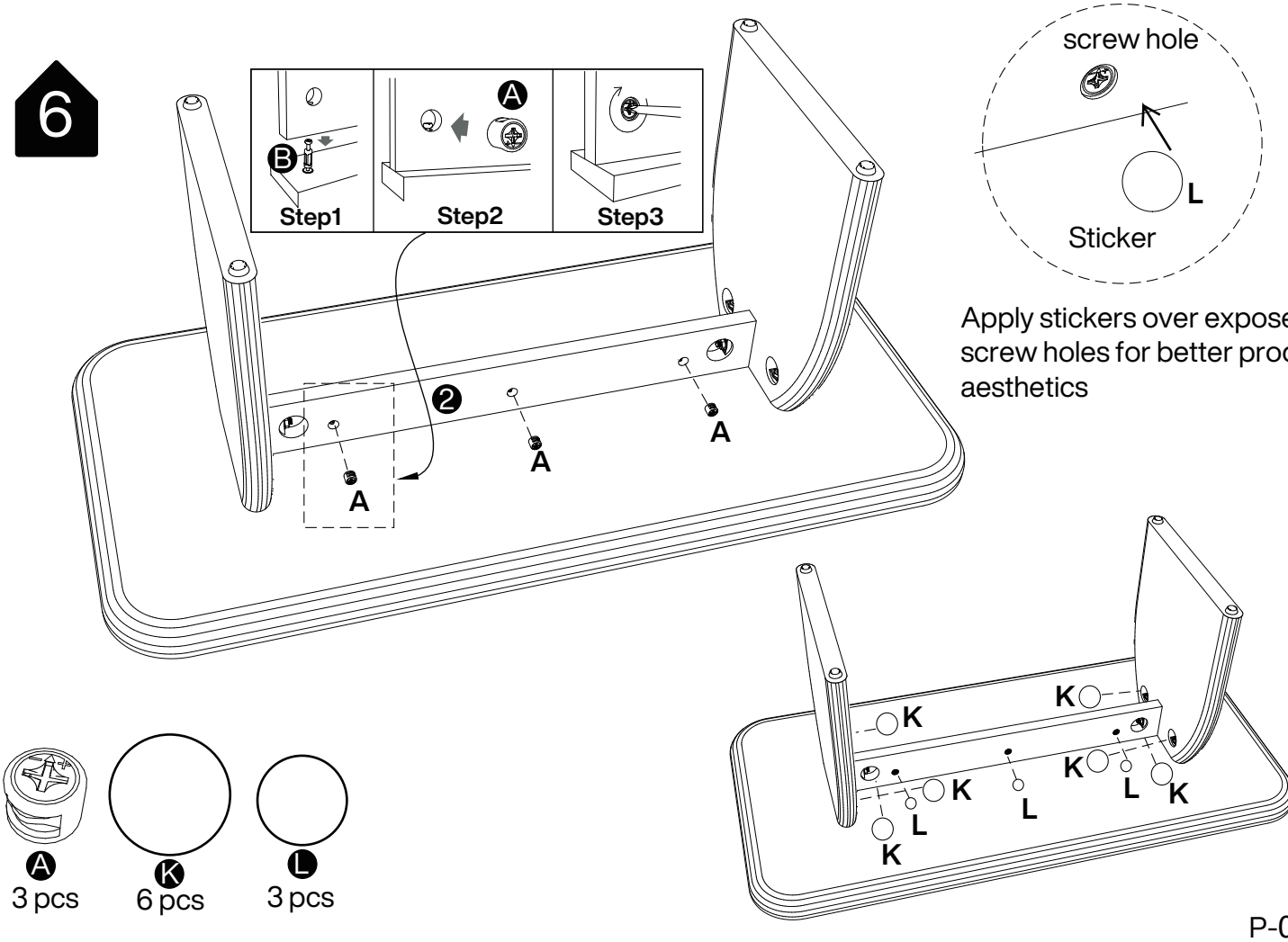

Apply stickers over exposed screw holes for better product aesthetics

Thank you for your support!

