CUSTOMER DATA SHEET - HEATING

DESCRIPTION:	Radiator 1080X550

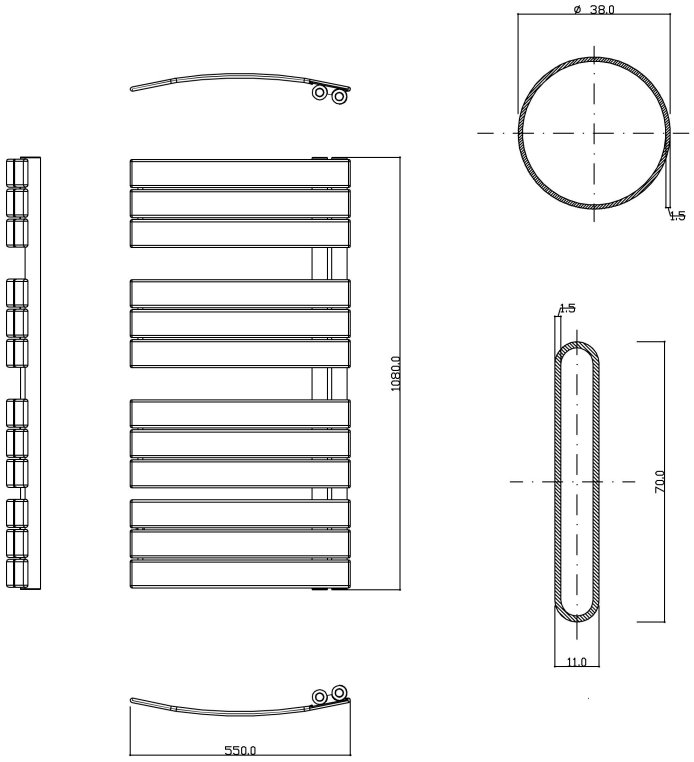

PRODUCT DIMENSIONS				
Height (mm)	Width (mm)	Depth (mm)	Length (mm)	Nett Wgt Kg
1080	550	85		15

PACKAGING DIMENSIONS			
Height (mm)	Width (mm)	Length (mm)	Gross Wgt Kg
70	570	1100	15

PACKAGING DATA			
Box Colour	White Cardboard Shrinkwrapped		
Box Qty	1	Label Colour	White Label
Label Size	100 x 50	Label Qty	2

OUTER BOX DIMENSIONS (If Applicable)			
Height (mm)	Width (mm)	Length (mm)	Gross Wgt Kg

PRODUCT DETAILS								
Contry of Origin	Italy	Certification	CE	Yes	RoHS	N/A	WEEE	N/A
Fitting Instruction	Yes	Colour/Finish	Anthracite					
RAL No	7016	Product Material	Steel					
Heat Element Wattage	N/A	Heat Element Wattage Compatible	N/A					
BTU @ 50 Degrees	1341	BTU @ 60 Degrees	1703					
Thermal Output @ 50 Degrees	393W	Thermal Output @ 60 Degrees	499W					
Pipe Centres	50mm	Max Projection						
Volume		Tube Diameter	N/A					
Wall to Ctr of Tappings	N/A	Floor to Ctr of Tappings	N/A					
Duel Fuel	N/A							