DREAMS IDEA

Instruction Manual



DREAMS IDEA

NO.CH0012

ABOUT US

DREAMSIDEA IS A ONE-STOP HOME

FURNISHING AND SERVICE COMPANY BASED IN USA.

WE ARE DEDICATED TO BRINGING YOUR DREAM HOME TO LIFE.

OUR SERVICES COVER FROM DESIGN, PRODUCTION,

DIRECT SELL, STORAGE, AND TRANSPORTATION.

IF REALITY IS THE NEAR SHORE

AND IDEALISM THE FAR SHORE,

DREAMSIDEA

AS THE FERRY BETWEEN THEM,

EAGER TO ACCOMPANY YOU ON A JOURNEY

TO YOUR IDEAL HOME.

ITEM NO.CH0012

WARRANTY

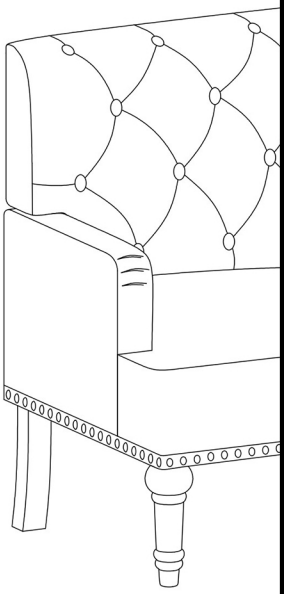

We strive to offer high quality product and we also try our best to satisfy each customer that order from us, no matter on products or services as needed. Each customer receives a record of their order, such as the order number or item receipt. For any items that are out of warranty period, you may still be able to purchase the replacement parts from our company if they are available.

Are you having difficulty
with assembly? Missing parts?
Please contact us : info@firstopintl.com
Tel:(562)-781-3327
send an email with your order No. to us
For return, please check the return policy with the retailer or platforms you bought from.
Appreciate your purchasing from us.
Pop up your life by our furniture !

MAINTAINANCE AND WARNING

Please read the manual thoroughly before you start installing.

Please keep the product away from sharp object.

Packaging and small parts may have chocking hazard, please keep them away from children and pets.

Please clean the product according to each clean code, check the product description for more information.

Please keep the product away from fire.

If you have any other questions, please contact us, we will be glad to help you out.

If the product is placed under direct sunlight, the pattern or color might fade away overtime.

Check the product periodically to make sure everything is secured and tightened.

Always use proper tools for installation.

Do not jump on the product.




One people




Around 30 min

PRODUCT DESCRIPTION

Compared to solid-colored leather fabrics, our chairs are more beautiful and delicate.

The black paint will not fade and be more beautiful, ensuring the stability and durability of the chair to the greatest extent.

The thickened leather cushion is more comfortable, and the memory sponge allows the chair for a long time without deforming.

Avoid the thoughtful design of the loss during transportation, all accessories are placed in the middle of the seat.

Not only does it make the chair look more refined and retro, but it further enhances the firmness of the fabric.

EXPLODED VIEW

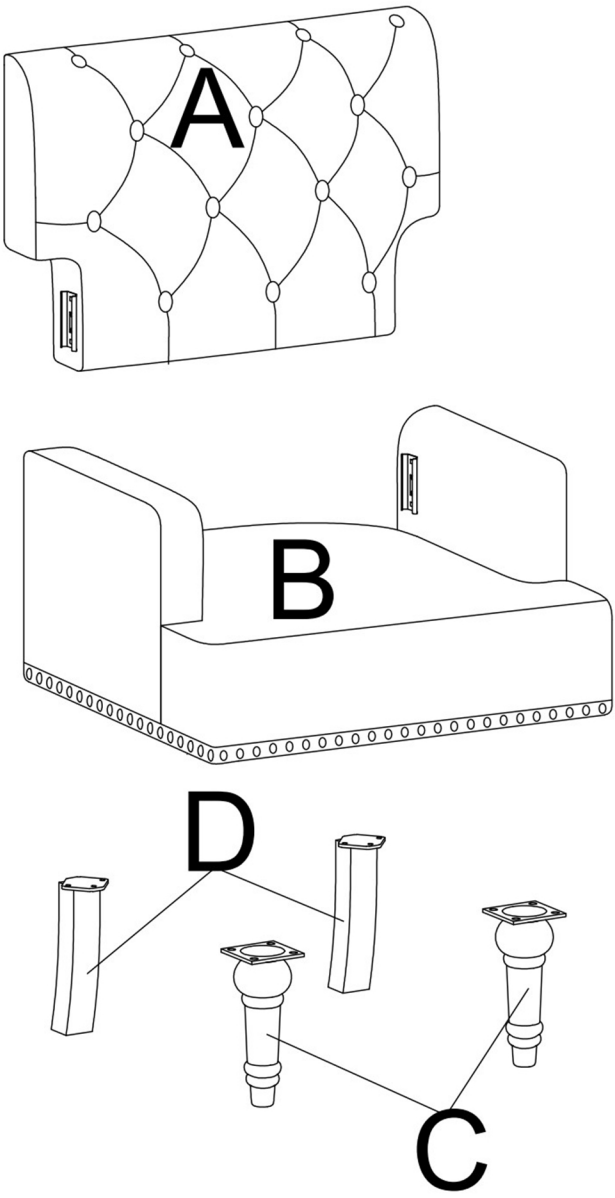

PARTS

A*1

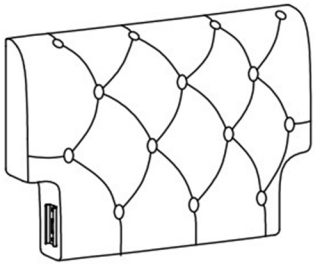

Backrest

B*1

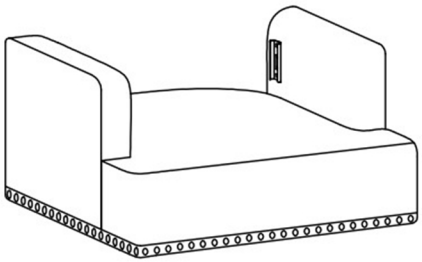

Seat cushion

C*2

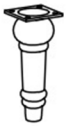

Front legs

D*2



Rear legs

HARDWARE

TOOL LIST

NOTE: Designated with (★) We provide additional spare parts in the hardware package

①*14



★ Bolt

②*1



Allen key

Please make sure all hardware&packing material fitting the list. Especially some small accessories may be missing during transportation. Please contact us if you have any question.

step 1

Take out all the legs (C & D) from the bottom of the seat frame (B) as shown.

Install front legs (C) and rear legs (D) onto the bottom of the seat frame (B) as shown, use the allen key (2) provided to tighten the bolts (1). Make sure the legs are correct, and also make sure all the legs are fully tightened before next step.

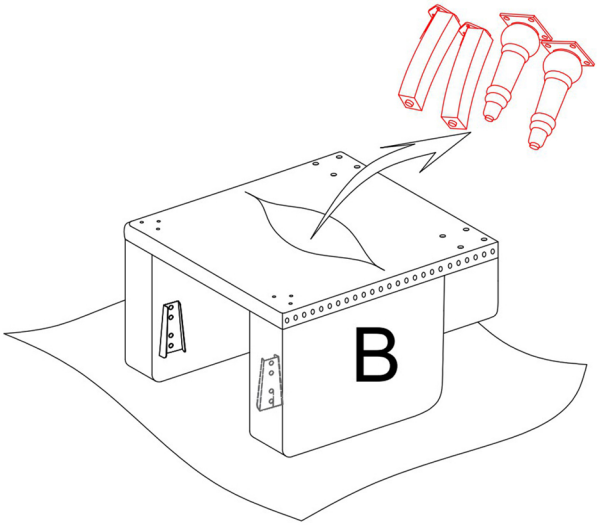

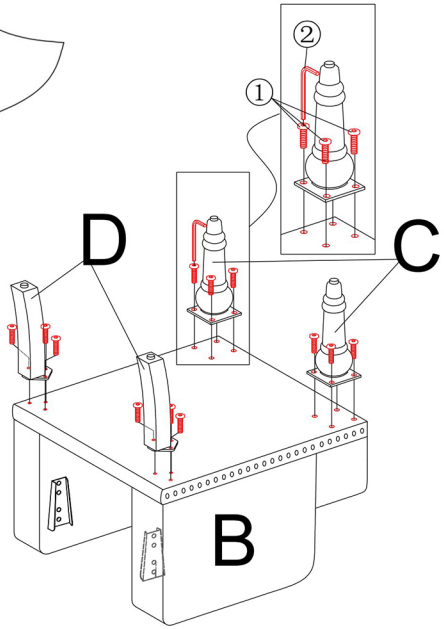

step 2

Install the backrest (A) to the seat frame (B) by inserting the connectors into the slots as shown, make sure they are both correctly aligned before pushing it down. After the backrest is installed, stick on the Velcro tape on the back.

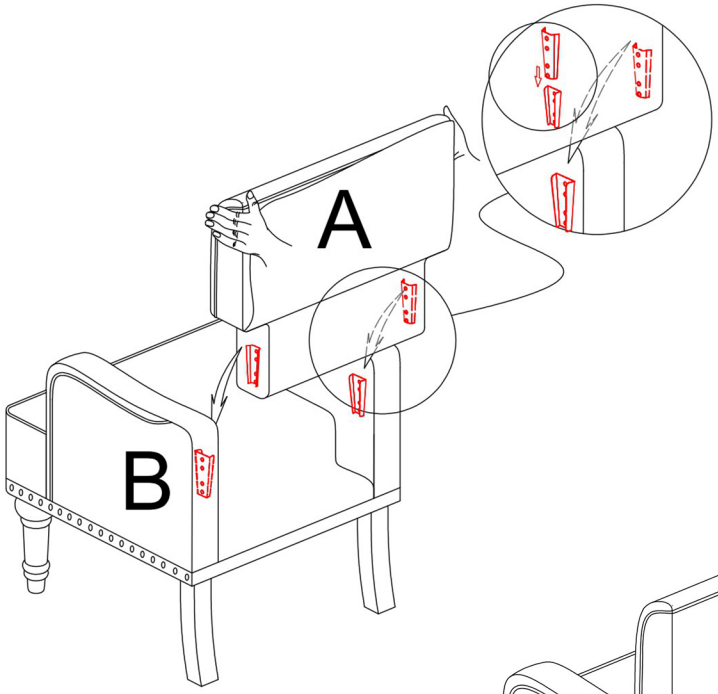

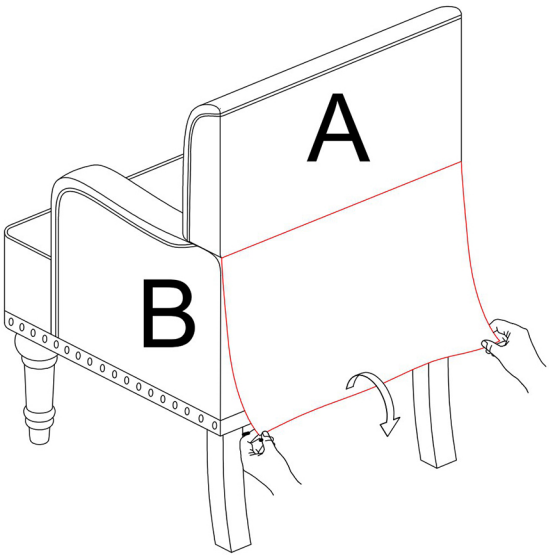

step 3

Please note: the legs of the chair can be adjusted by twisting the leveler on the tip of the legs as shown, it can help you use this chair on ground that is not flat, please check before you use the chair.

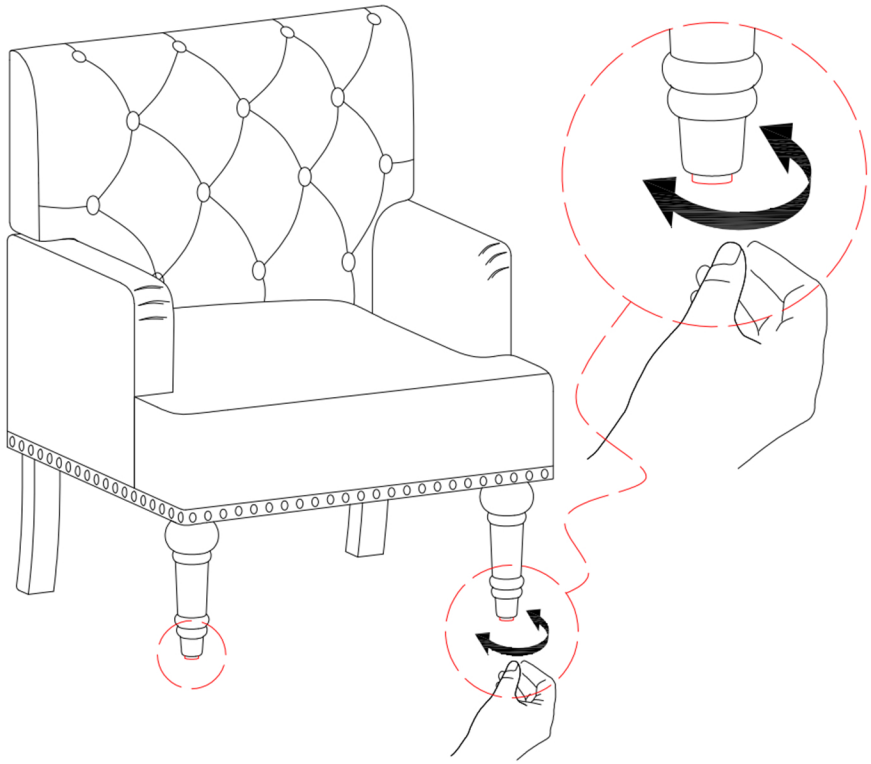



ASSEMBLY INSTRUCTIONS

Tel.(562)-781-3327

Please contact us:info@firstopintl.com

https://www.dreamsidea.com