Product ID. 7A4WI

Scan for Support
support@garvee.com

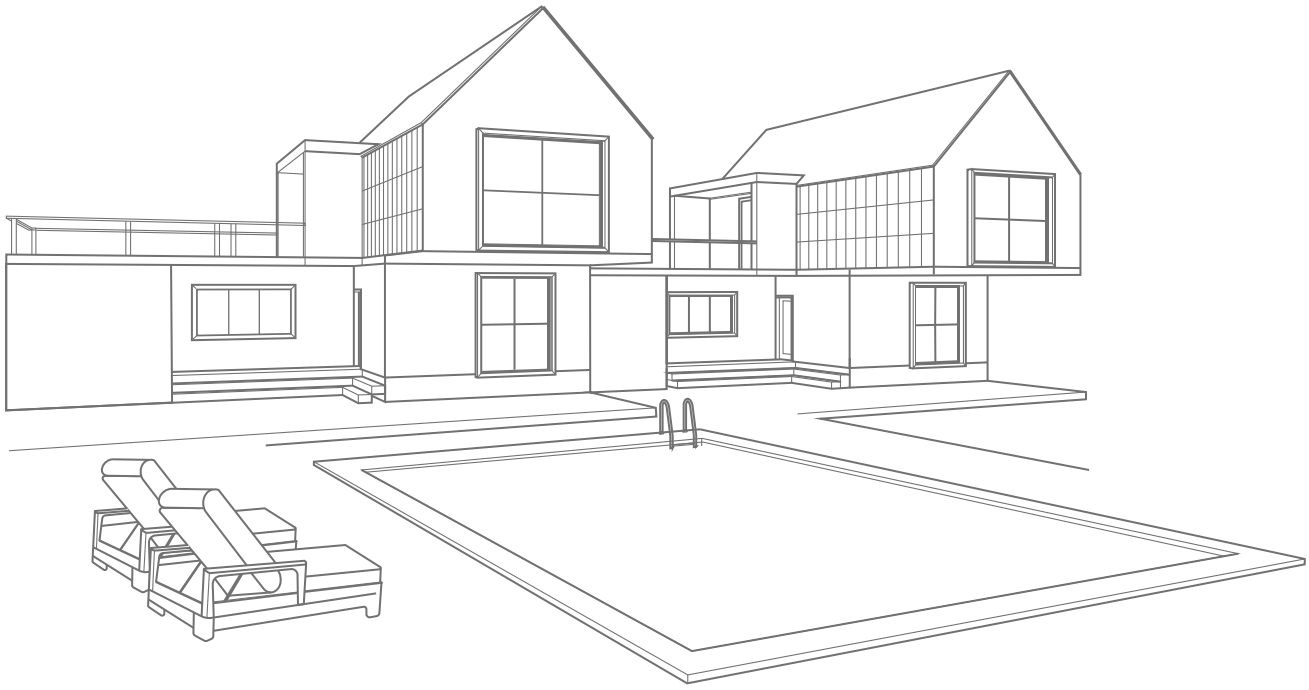

Distributed by

GARVEE.com

V260211VQLK

Assembly Preparation

Owner'sManual：

Please check local building codes regarding footings, location and other requirements before beginning construction.

Assembly instructions:

Reviewing all instructions and the appropriate information before you begin, make sure following the step sequence carefully for successful results.

Flooring base:

A good location for the storage building is a square and level area with good drainage. The base is not included in the kit which may need
purchase separately or may construct a foundation and anchoring system of your own.
A strong plastic sheet (thickness: at least 150μm) should be placed under the foundation to assist in reducing rising dampness from the soil, thus
reducing condensation build up in the shed. Your storage building must be anchored to prevent wind damage. Once secured, it is highly
recommended applying silicone along the inside of the base rail to minimize condensation.

Parts and Parts List:

Before you start, separate and identify all the parts and hardware to be sure that you have all the nccessary parts for your building (refer to the
Parts List Page), If you find that a part is missing, please notify the seller within one week after receiving the product. Do not attempt to assemble
the building if parts are missing because any building left partially assembled may be seriously damaged by light winds.

Tools you need:

(Please tear off the safety protection layer before the assembly, keep the part number label if needed)

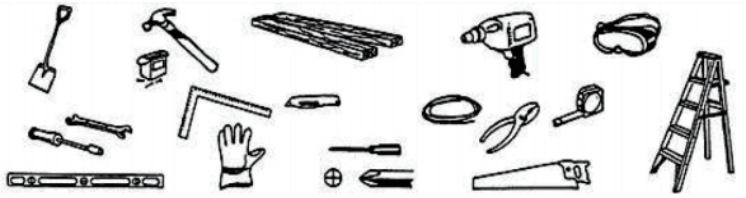

Safety must be put in the No. 1 position:

1. Select a dry and calm day for your assembly. Team works (Two or more people) are required during the assembly. It is also recommended to
finish the assembly in a day to avoid damage to the product or missing of some small parts.
2. Wearing safety gloves,eye protection and long sleeves during the assembly to prevent injury. Pay attention to the sharp edge ofsome parts.
3. Children and pets are not allowed entering into the construction site.
4. Never concentrate your total weight on the roof of the building.
When using a step ladder make sure that it is safe.

Care & Maintenance:

1. Keep the shed clean with soft cloth, use water if necessary.
2. Keep the door tracks clear of dirt and other stuff that prevent them from sliding easily.
3. Clean the snow with necessary tools to make sure it is safe to enter into.
4. The shed is not made for living but storing stuff.
5. Please add some oil on the top and bottom door sliding channel to make door slides smoothly.

SIZE:

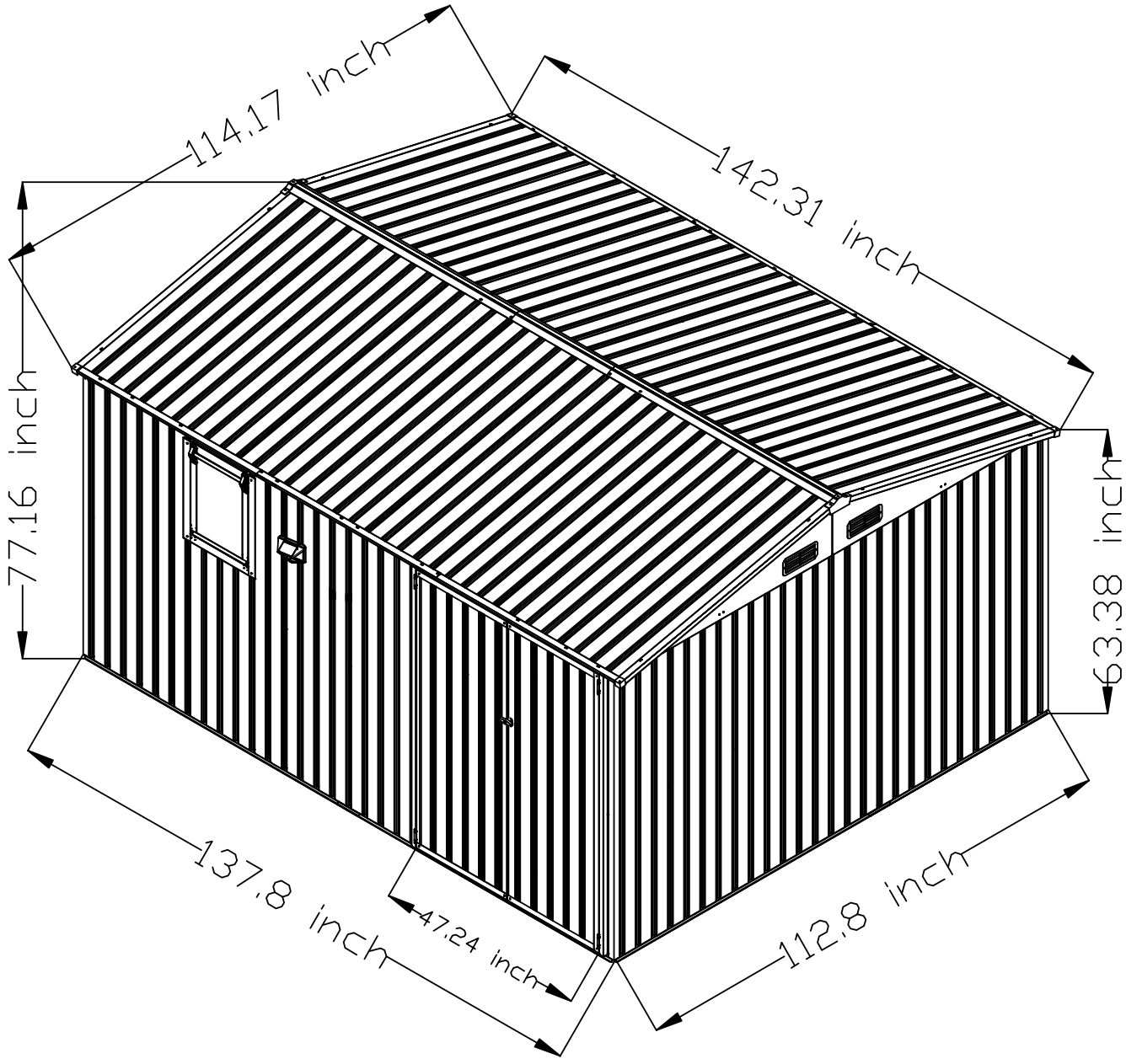
114.17 inch
142.31 inch
77.16 inch
63.38 inch
137.8 inch
47.24 inch
112.8 inch

Hardware List A

IMAGE	NO.	QTY.
	W5	21
	W5-K	2
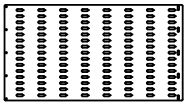	HB	1

Hardware List B

IMAGE	NO.	QTY.
	F1209-7L	2
	F1209-7M	12
	F1209-7MM	2
	F1209-7R	2
	W5-FB	1
	W5-C	4
	W3	2
	W2-HL	1
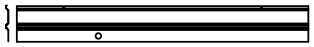	W2-HR	1
	DCH	1
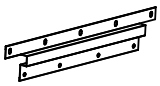	DCH6	1
	DCH2	2
	DCH1	2

Hardware List C

IMAGE	NO.	QTY.
	K810-1	2
	K810-1R	2
	K810-2	2
	F1209-2R	2
	K810-3L	2
	K810-3	2
	K810-4	2
	F1209-4R	2
	F1209-5L	2
	F1209-5R	2
	K812-6L	6
	K812-6R	6
	K812-6M	6
	F1209-8	4
	F1209-9L	2
	F1209-9M	2
	F1209-9R	2
	K812-10	2
	K812-10M	1
	UAK	2
	DAP	2
	DLA	1
	DRA	1
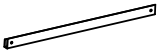	DDA	4

IMAGE	NO.	QTY.
	DBA	4
	DCH7	1
	GF	4
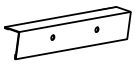	C3	4
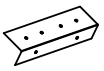	K1012-11	8
	HG	15
	GC	4
	GE	2
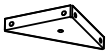	T-F	4
	DC	2
	DC (L)	1
	C2	4
	DJ	4
	F1	586
	F2	111
	F4	4
	V2	214
	GL	1
	DH3	2
	SL	98
	M20	1
	ST	2
	LED	1
	3M adhesive	1

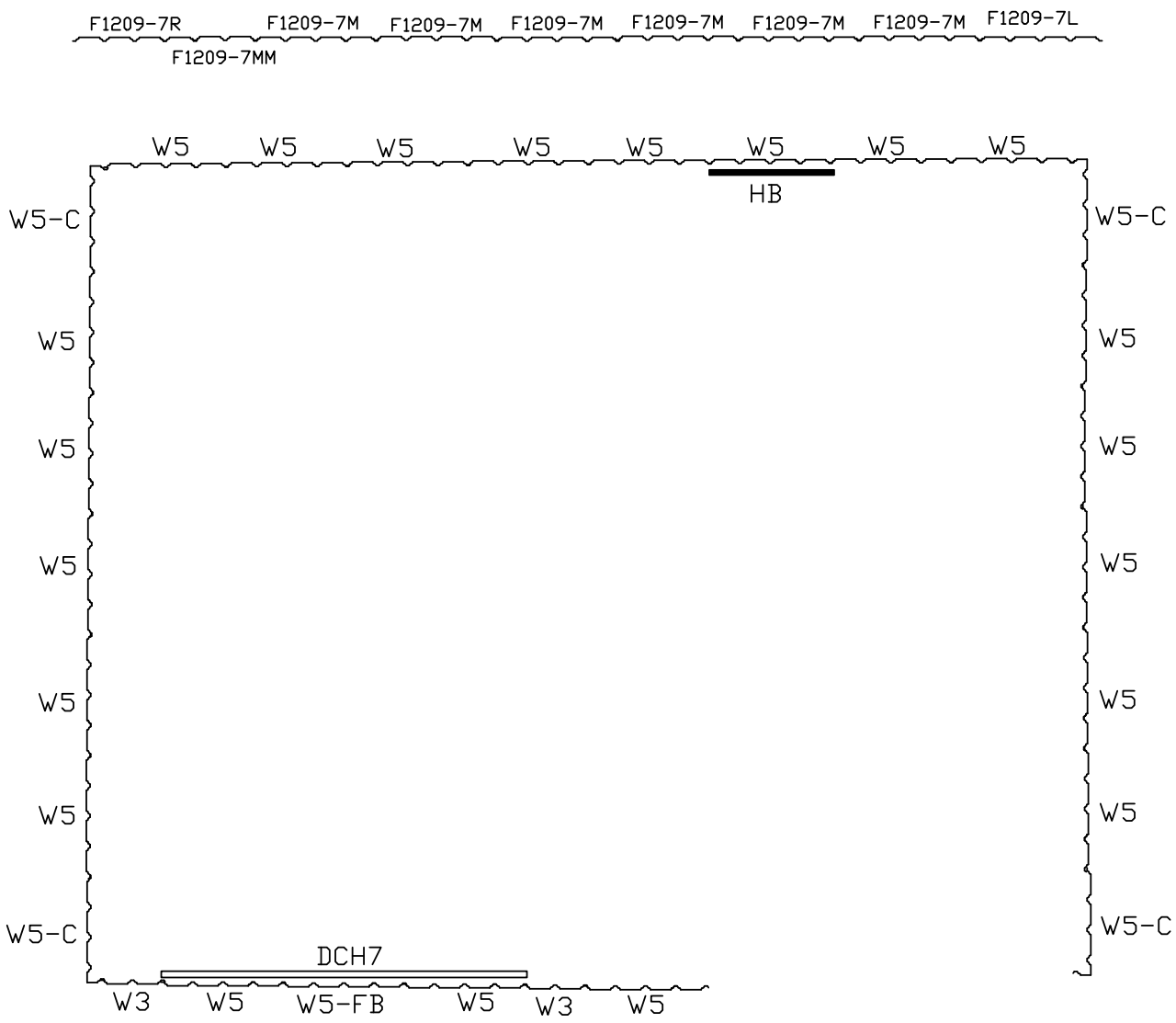
F1209-7R
F1209-7MM
F1209-7M
F1209-7M
F1209-7M
F1209-7M
F1209-7M
F1209-7M
F1209-7L
W5
W5
W5
W5
W5
W5
W5
W5
HB
W5-C
W5
W5
W5
W5
W5
W5
W5-C
W5-C
W5
W5
W5
W5
W5
W5
W5-C
DCH7
W3
W5
W5-FB
W5
W3
W5

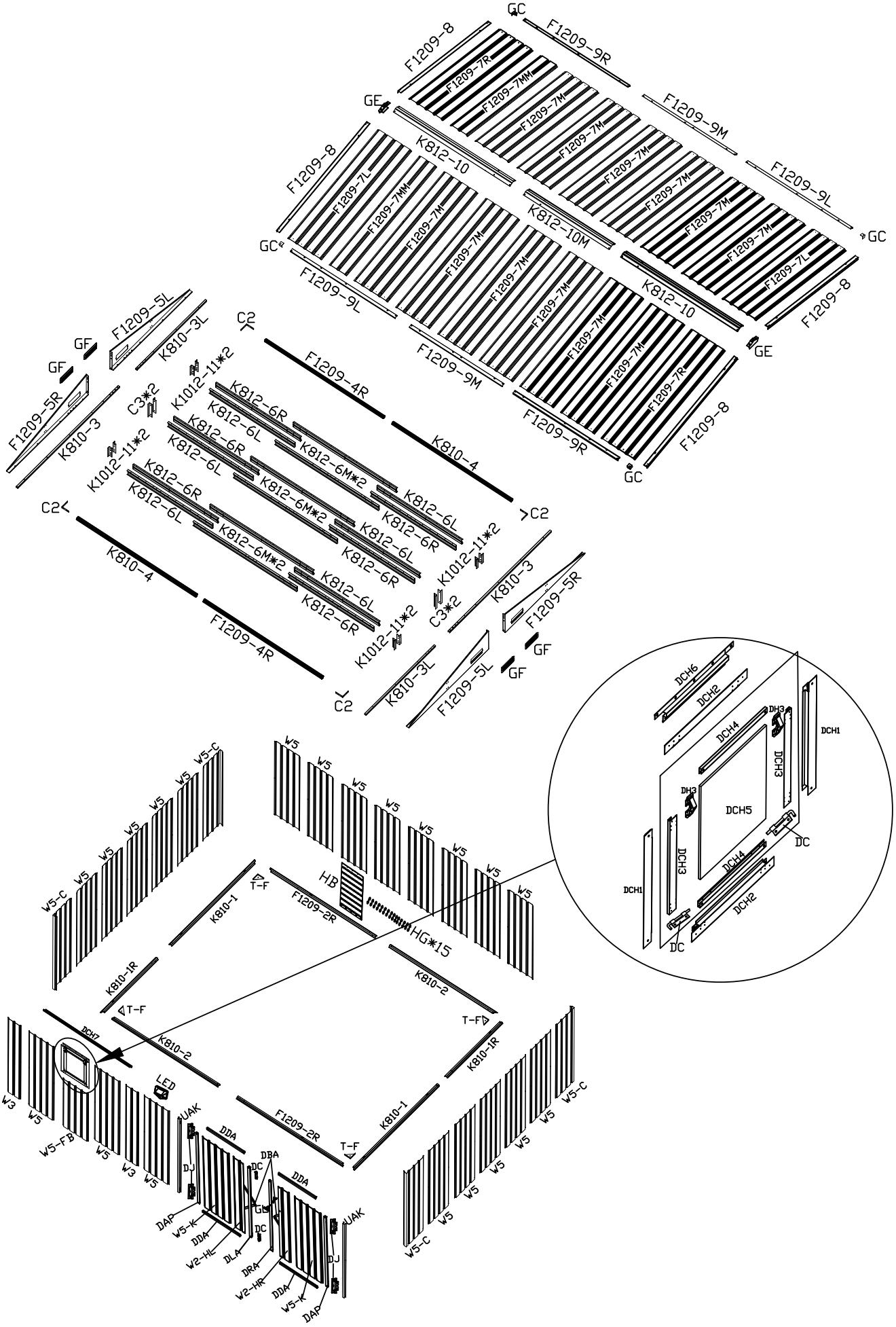
GC
F1209-8
F1209-9R
F1209-7R
F1209-7MM
F1209-7M
F1209-9M
GE
K812-10
F1209-9L
F1209-7L
K812-10M
F1209-5L
K810-3L
C2
GF
F1209-5R
K810-3
C3*2
K1012-11*2
F1209-4R
K812-6R
K812-6L
K812-6M*2
K810-4
>C2
K810-3
F1209-5R
K810-3L
F1209-5L
W5
W5-C
W5-FB
W3
T-F
K810-1
F1209-2R
HB
HG*15
K810-1R
K810-2
DCH7
LED
UAK
DDA
DBA
DC
DJ
DAP
W5-K
W2-HL
DLA
DRA
W2-HR
DCH6
DCH2
DCH4
DH3
DCH1
DCH3
DCH5
DC

STEP 1

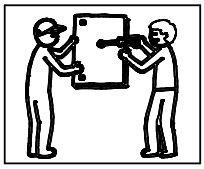

This step requires two people to complete the installation together.

PART	NO.	QTY.
	K810-1	2
	K810-1R	2
	K810-2	2
	F1209-2R	2
	T-F	4
	F1	36

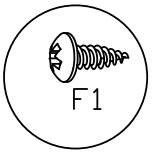

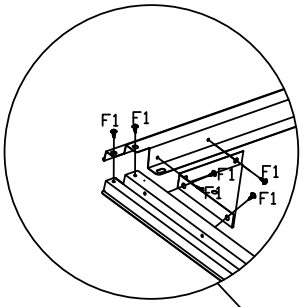

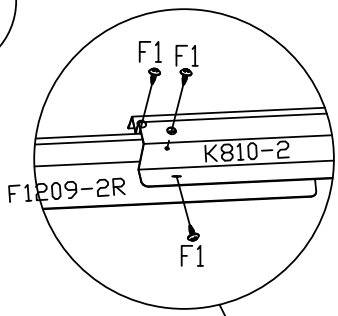

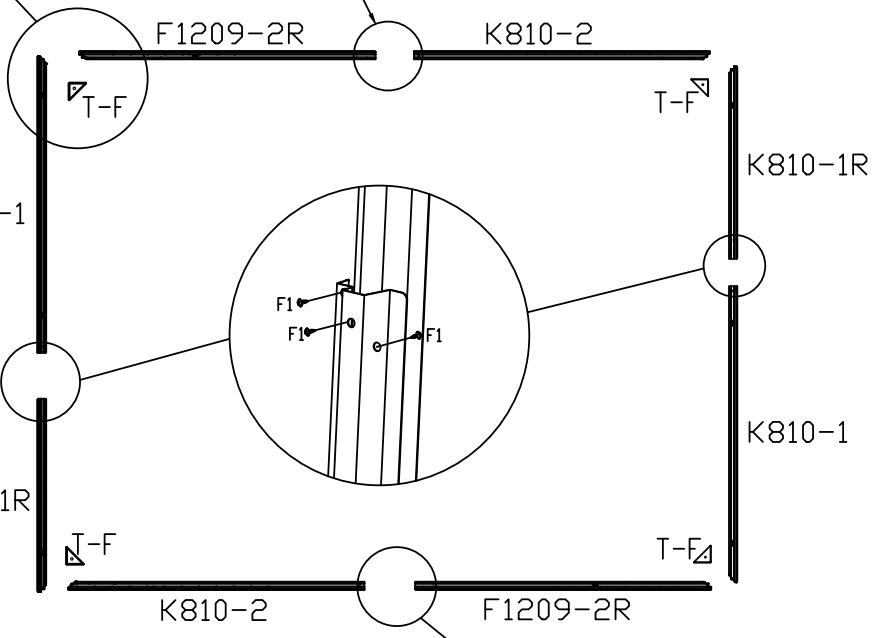

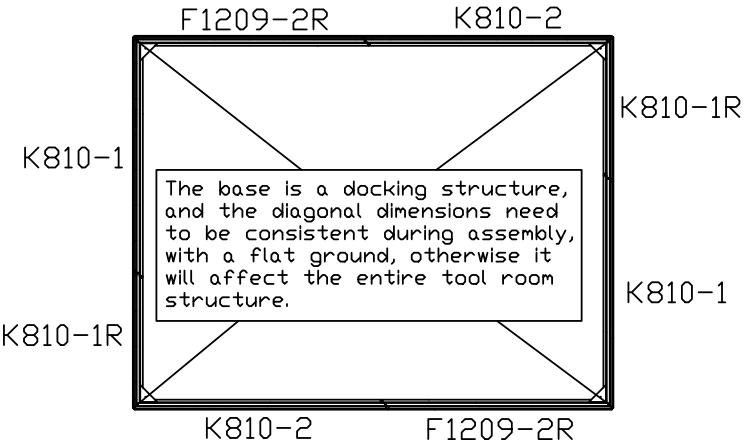

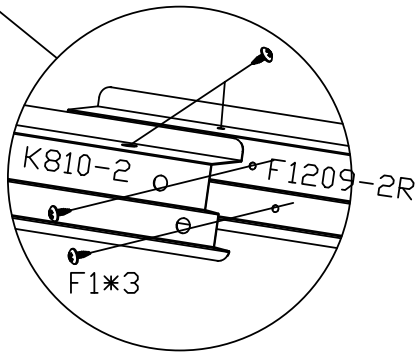

STEP 2

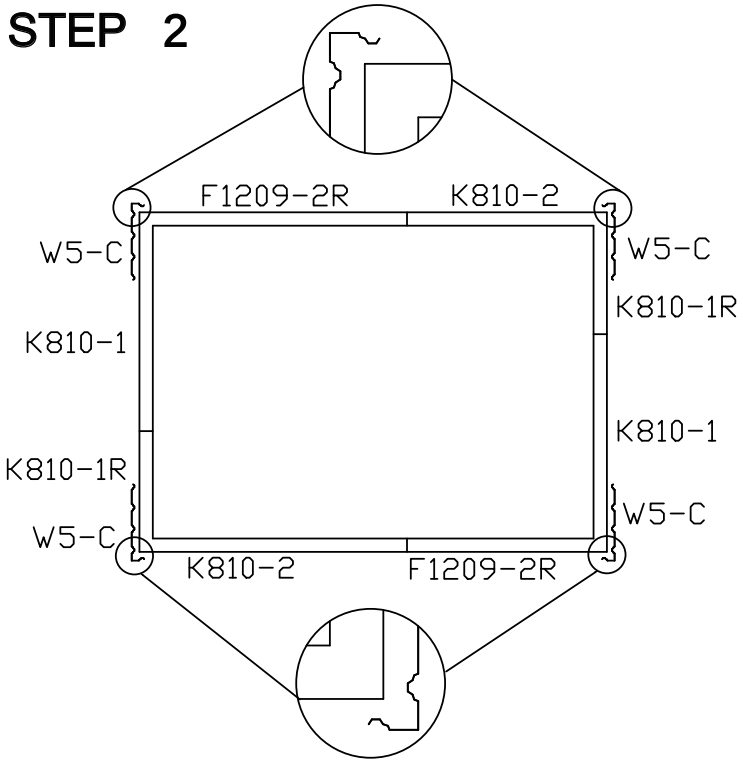

PART	NO.	QTY.
	W5-C	4
	F1	12

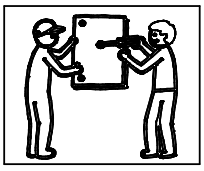

This step requires two people to complete the installation together.

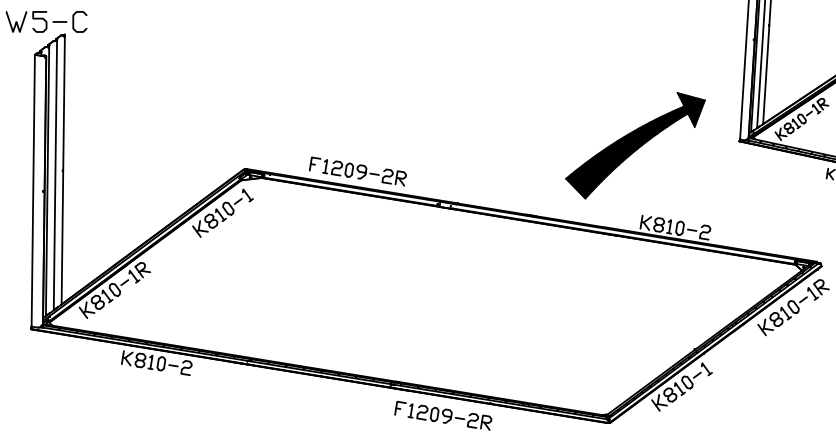

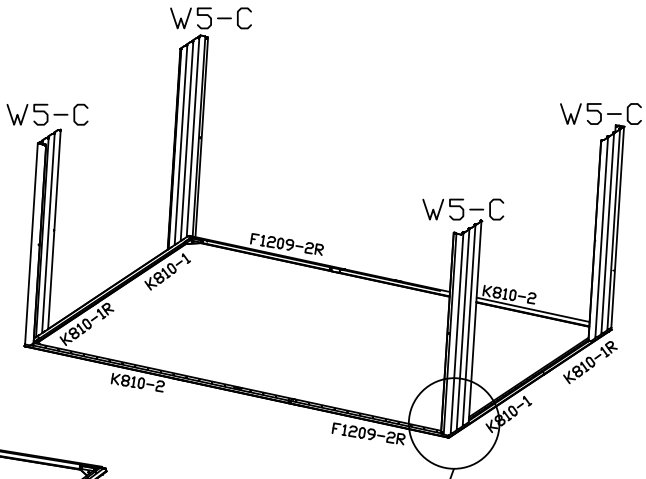

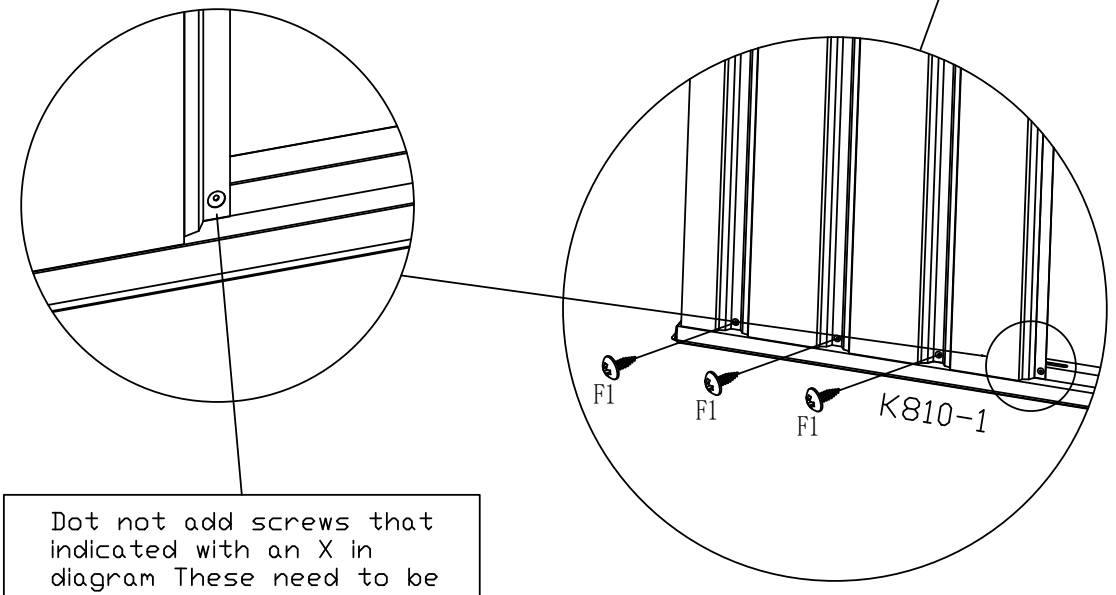

Dot not add screws that indicated with an X in diagram These need to be left undone.