ASSEMBLY INSTRUCTIONS

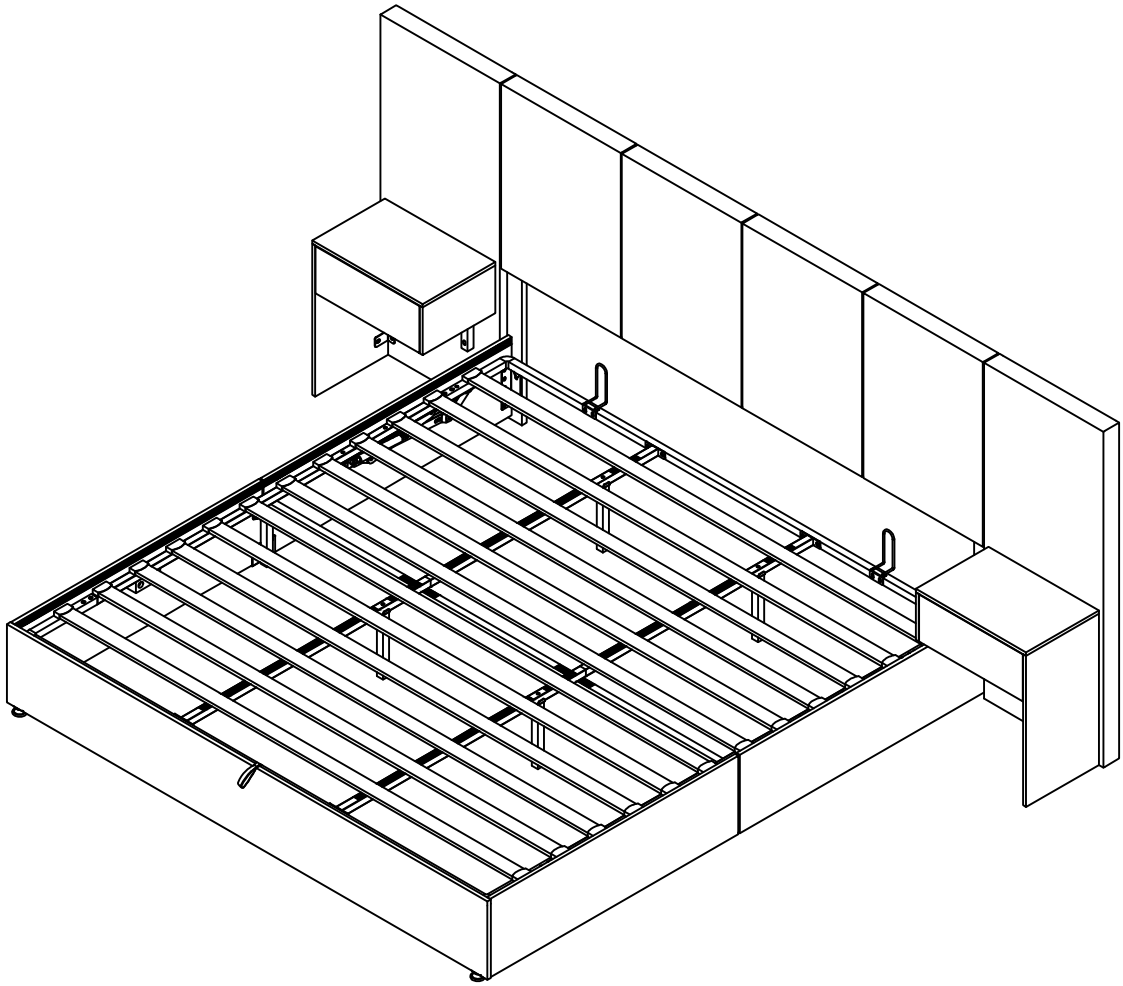

Dear Customer :

Thanks a lot for choosing our product. Please read each step carefully. It’s very important that each step of the instructions is performed in the correct order. If these steps are not followed in sequence, assembly difficulties will occur.

NOTICE:

-Please retain these instructions for future reference.

-Please read the instruction sheets completely before assembly. Remove all parts from the carton and ensure all components are included before assembly.

-Assemble the bed on a protected surface to avoid scratching the components of the bed.Be careful not to cross-thread screws. Please use a piece of the cardboard packaging to protect your floor and product.

-Two people are recommended for assembly!

-Don't tighten all screws before you have installed all the parts of the bed.

-When you assemble your bed,if you smell a weird smell of the material please don't worry it's very Normal. What you should do is to air it for 1or 2 days on your balcony, patio, or near your window.

Our bed have been certified by the environment authority. So please don't worry it won't hurtyour health,it's completely safe.

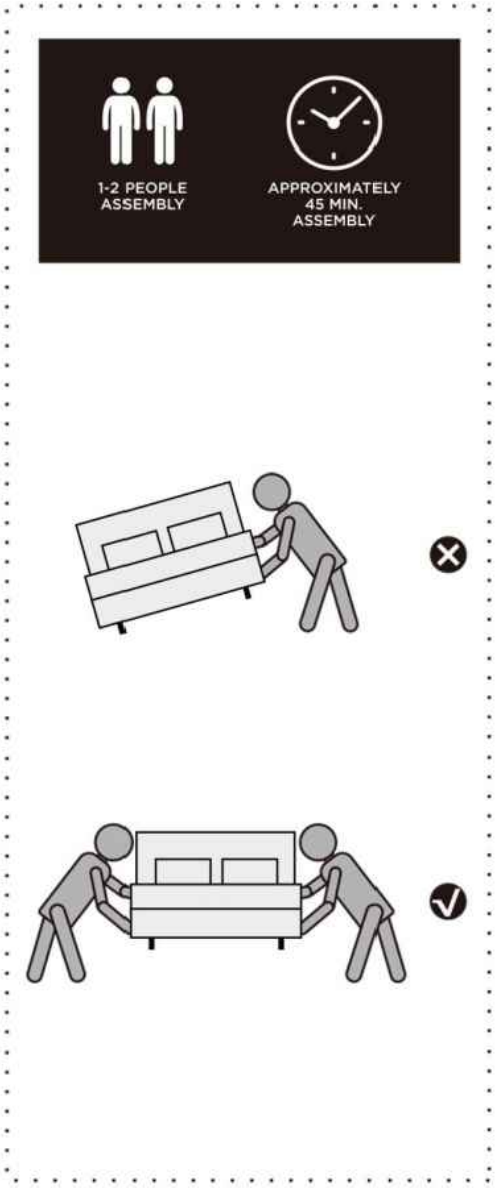

NOTICE:

RETURN/DAMAGE CLAIM INSTRUCTIONS:
-If the package is damaged, please contact us as soon as possible and attach the damaged photo.

-Return Policy: This item can be returned within 30 days without any reason.If you return this item for personal reasons,you need to bear the freight of returns and order processing fee (0-50% restocking fee based on the invoice price).If the product has quality issues (not caused by humans), we will bear the freight.

-If you need to return the goods,please keep the original box.Please make sure to use the return label provided by us and do not return it without permission. Please do not share a label with multiple boxes.

-If you return the product after 30 days from receiving it, we are afraid that your return application won’t be accepted.We appreciate your understanding.

-The warranty product is one year.If this item is damaged within the warranty period we will arrange you the replacement parts free of charge If the item is damaged for some personal reasons,we could also replace it for you,however you need to bear the transport fees.

GENERAL ASSEMBLY GUIDELINES

Before your installation, please make sure that you have all the parts listed on the manual. If you find something missing,stop installing and contact your supplier immediately.

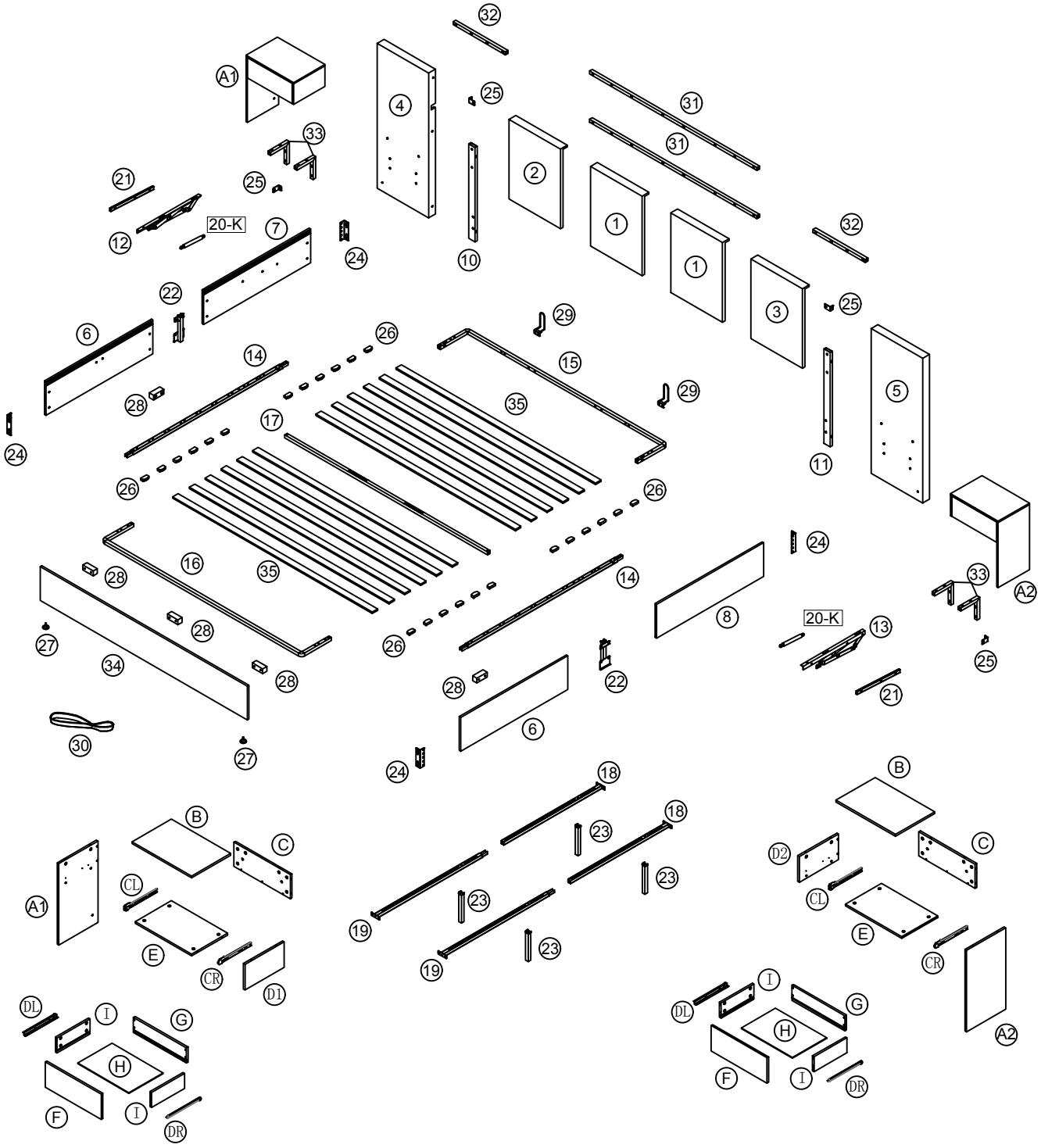

Start...

Tips:

- Don't tighten the screws one after another immediately until all screws are lined up with holes Leave some space for adjustment.

- Screws may be not lined up with the holes.However,if that happens please loose the screws a little and then tighten them in a diagonal way again.

- If the product is uneven or unstable after assembly, please loosen the screws,and put strength on it to make sure that all the legs are at the same level. Go on assembling it.

- Remove all parts from the carton and place them on a protected surface or carpet.

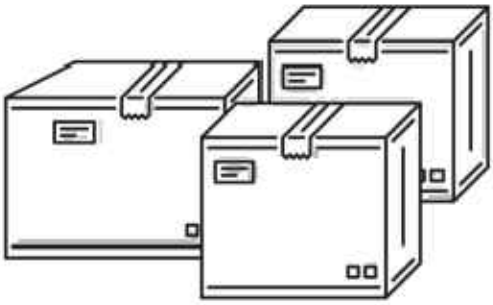

Parts List

Pls make sure all the accessories are complete!

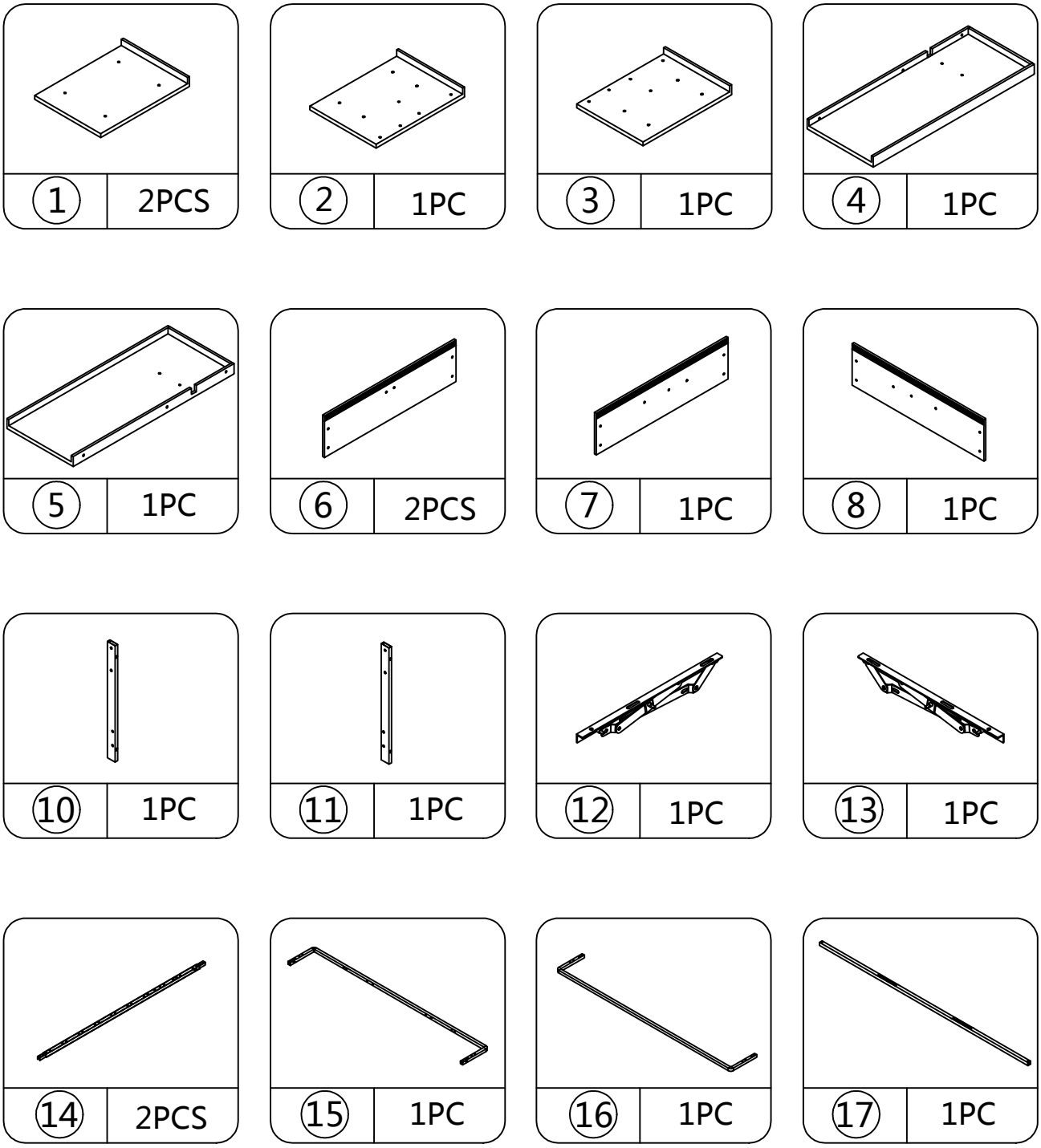

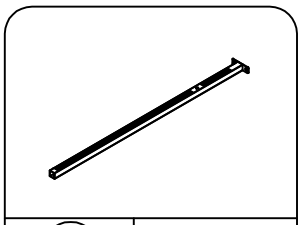

18	2PCS

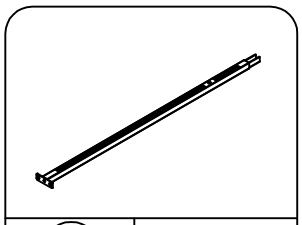

19	2PCS

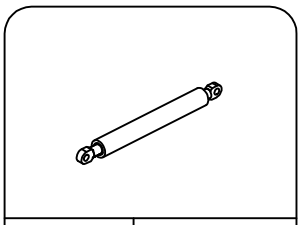

20-K	2PCS

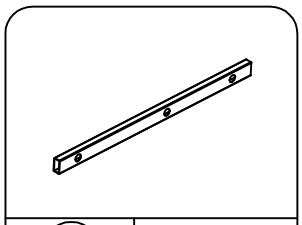

21	2PCS

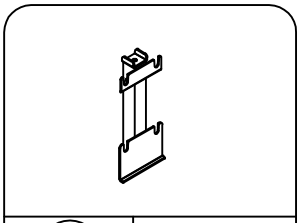

22	2PCS

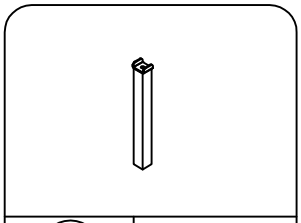

23	4PCS

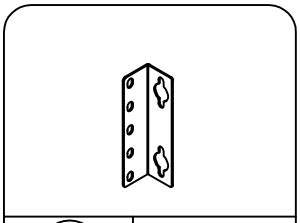

24	4PCS

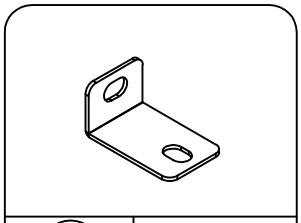

25	4PCS

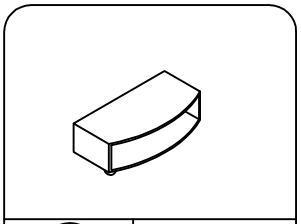

26	24PCS+2

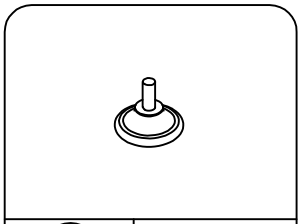

27	2PCS

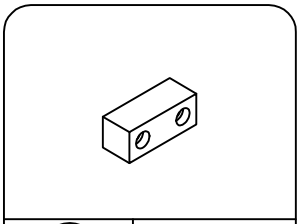

28	5PCS

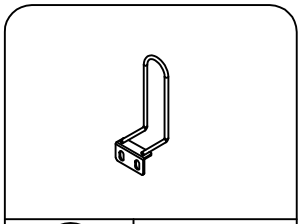

29	2PCS

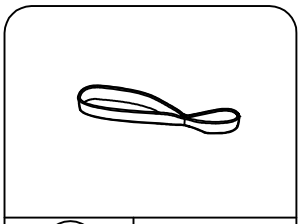

30	1PC

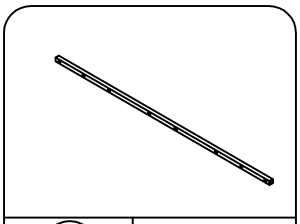

31	2PCS

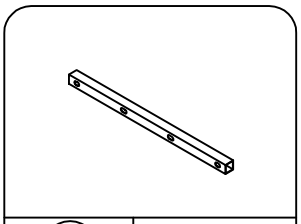

32	2PCS

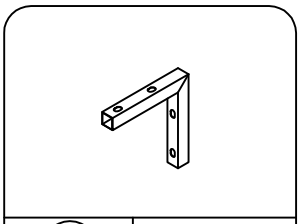

33	4PCS

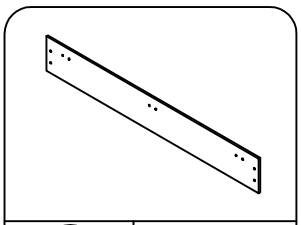

34	1PC

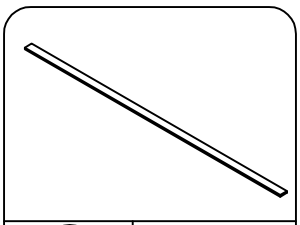

35	12PCS

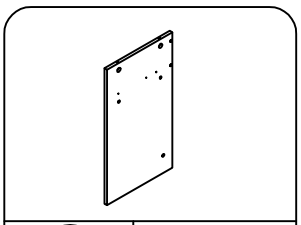

A1	1PC

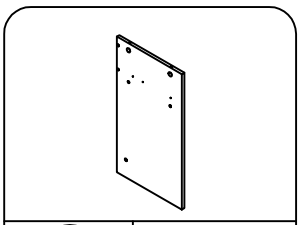

A2	1PC

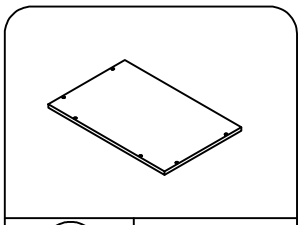

B	2PCS

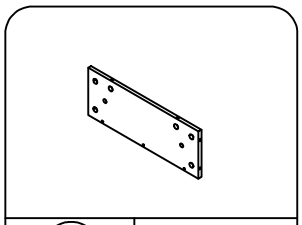

C	2PCS

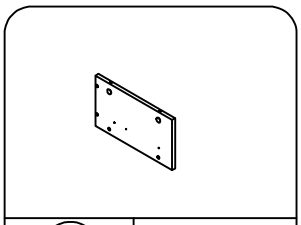

D1	1PC

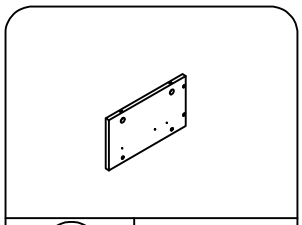

D2	1PC

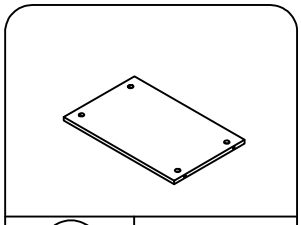

E	2PCS

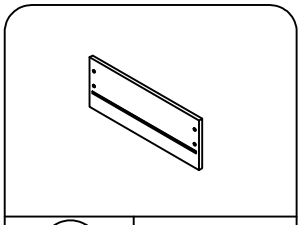

F	2PCS

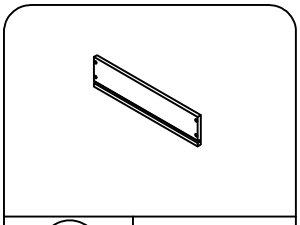

G	2PCS

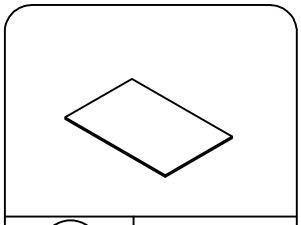

H	2PCS

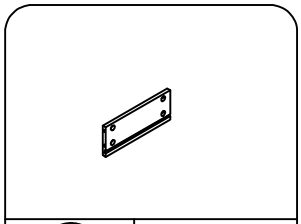

I	4PCS

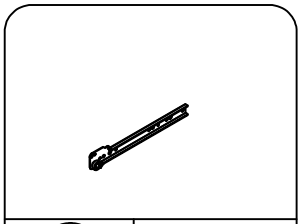

CL	2PCS

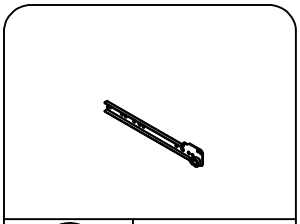

CR	2PCS

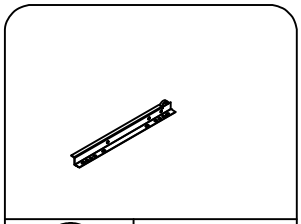

DL	2PCS

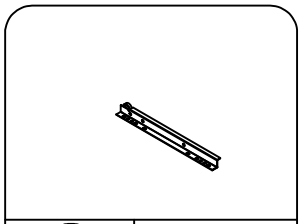

DR	2PCS

Hardware List

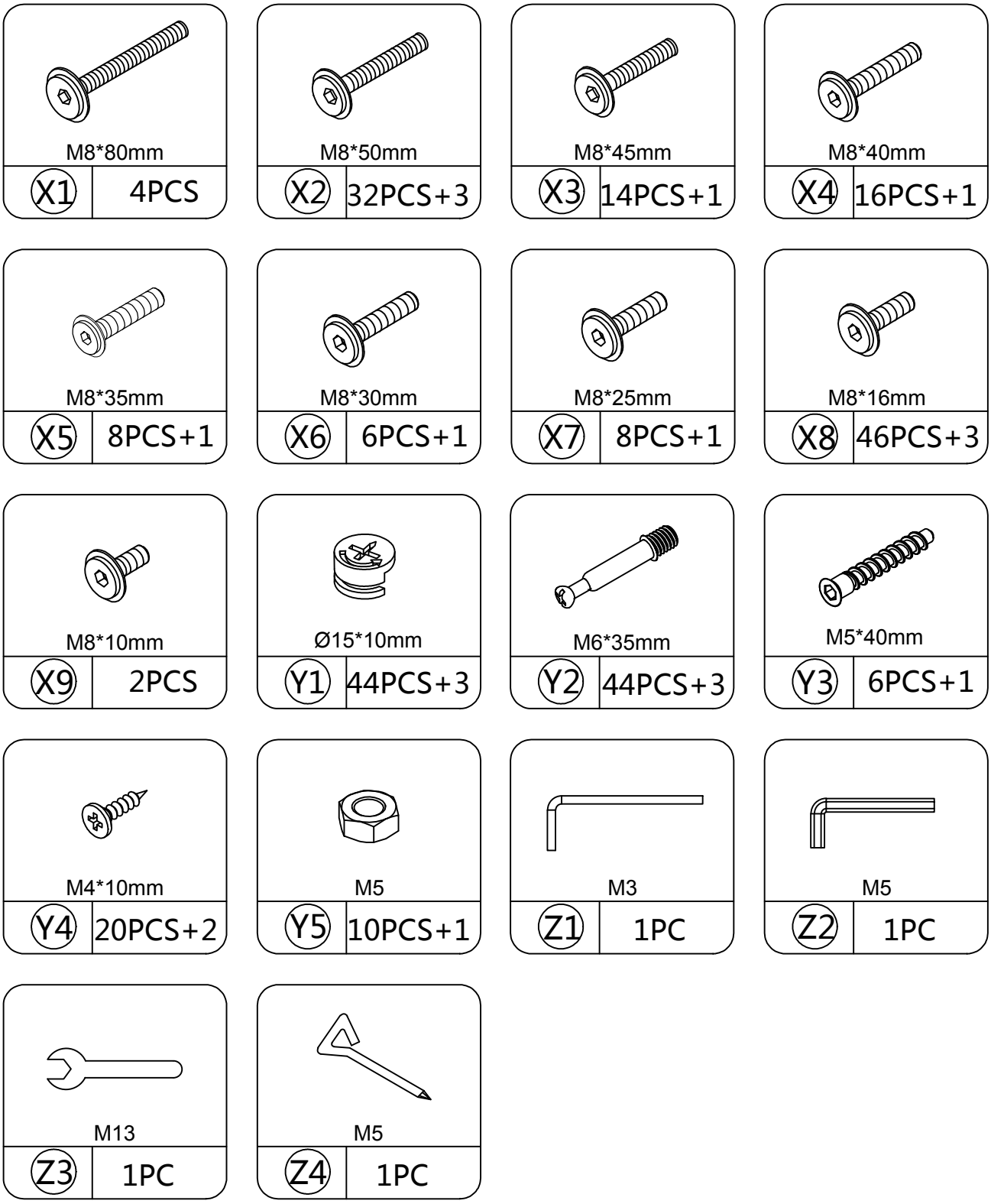

1

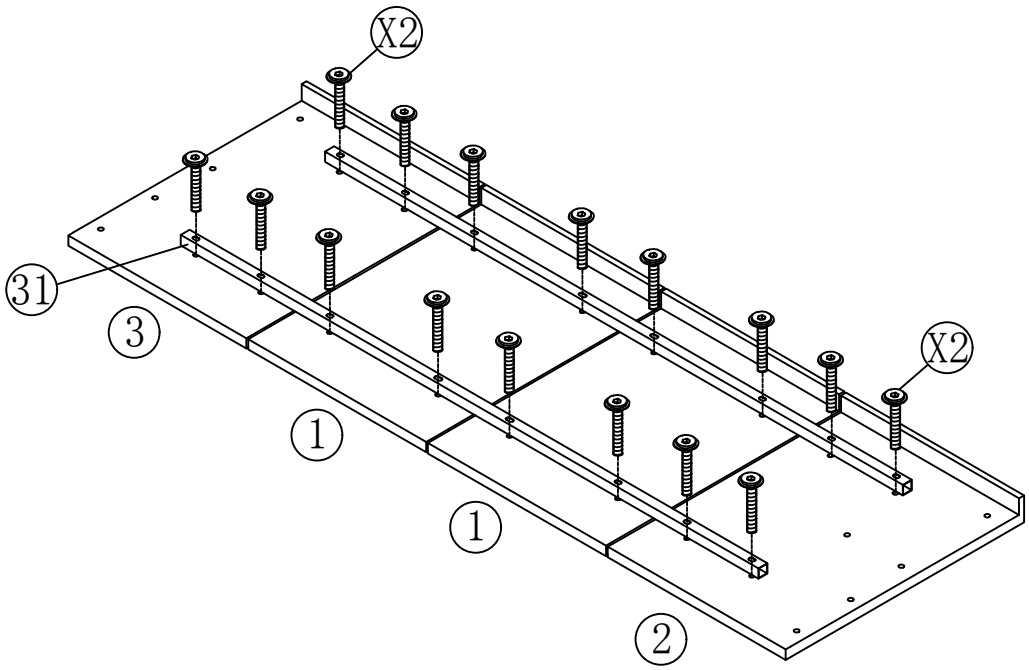

X2	16PCS

2

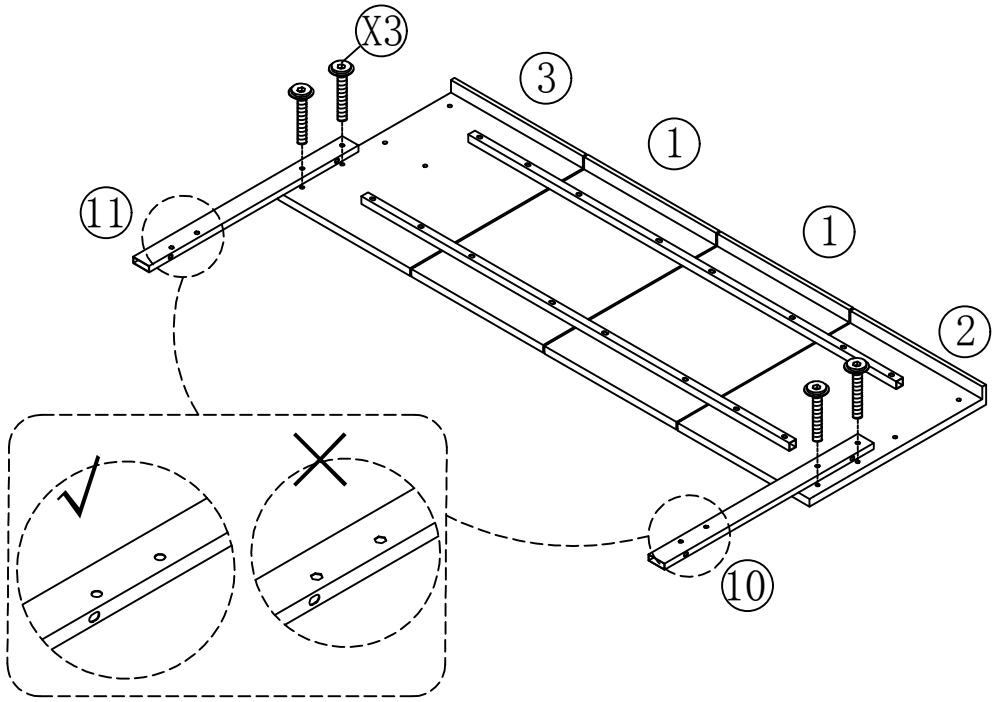

X3	4PCS

3

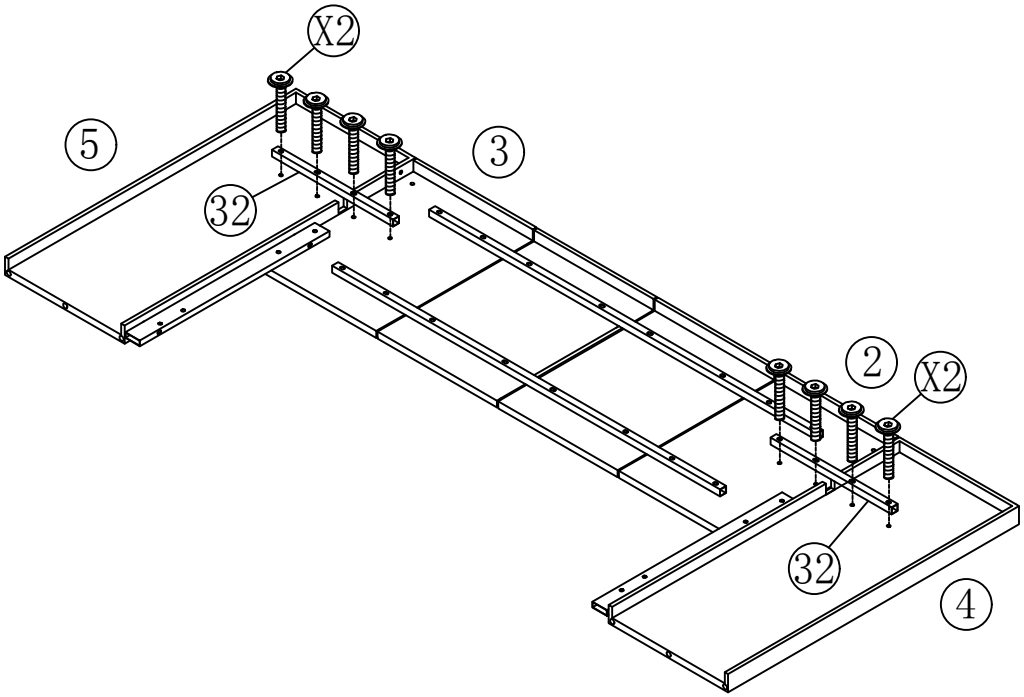

X2		8PCS

4

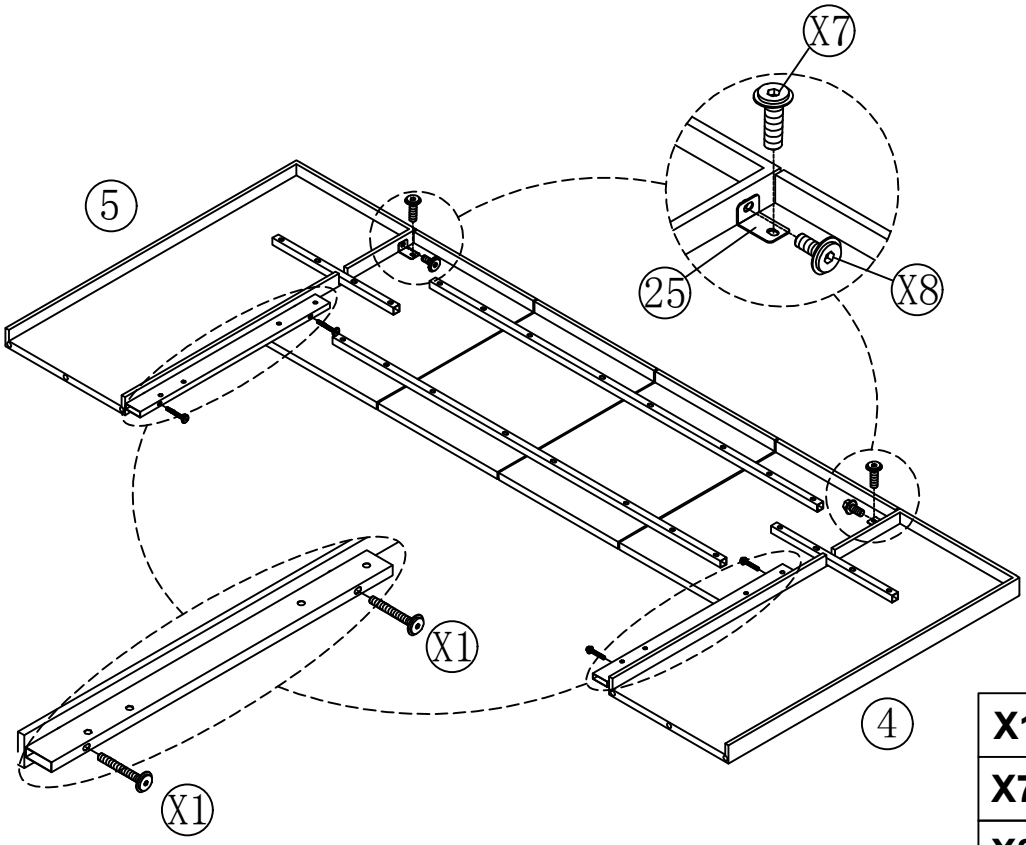

X1		4PCS
X7		2PCS
X8		2PCS

5

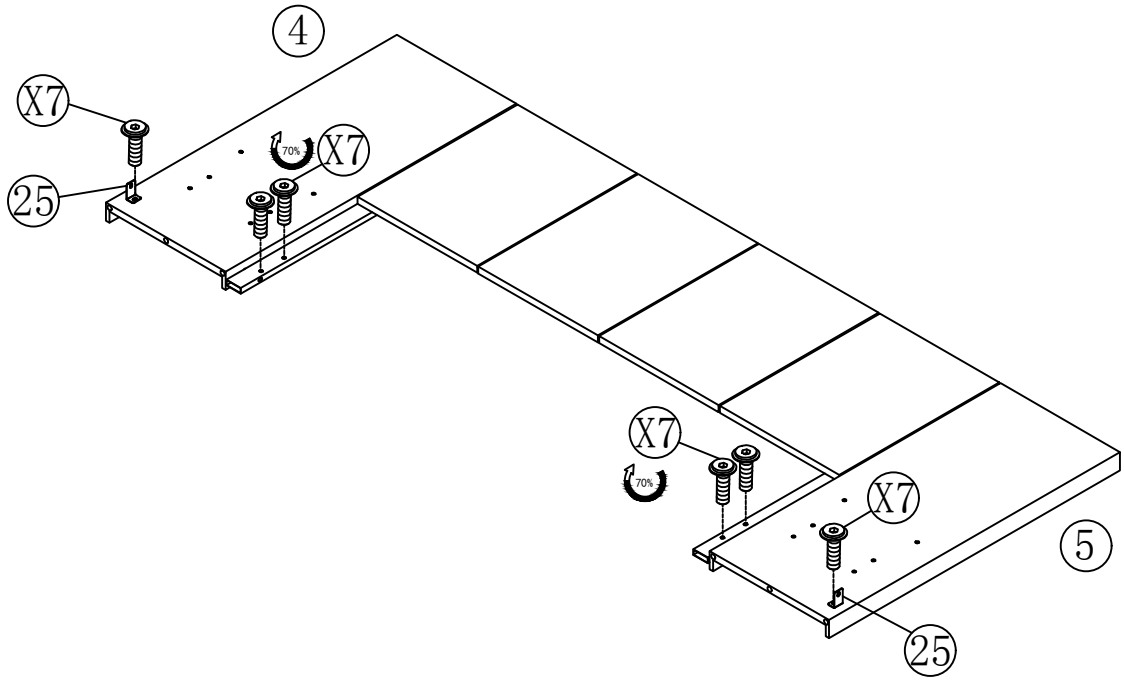

X7		6PCS

6

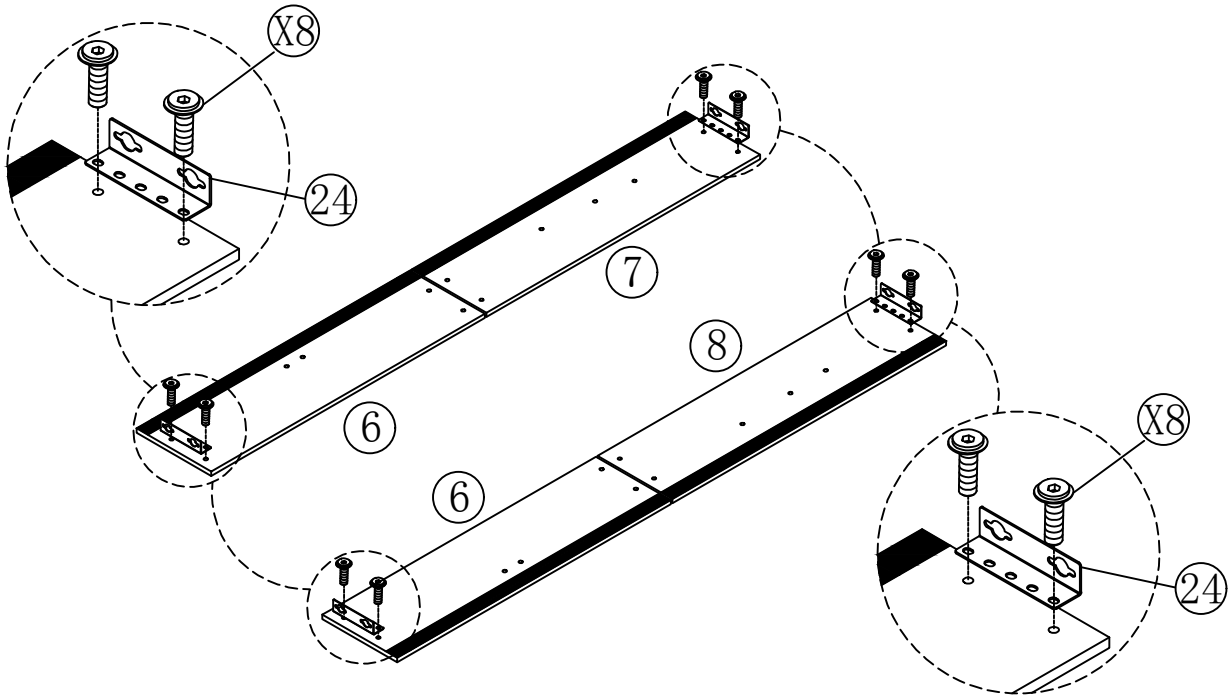

X8		8PCS

7

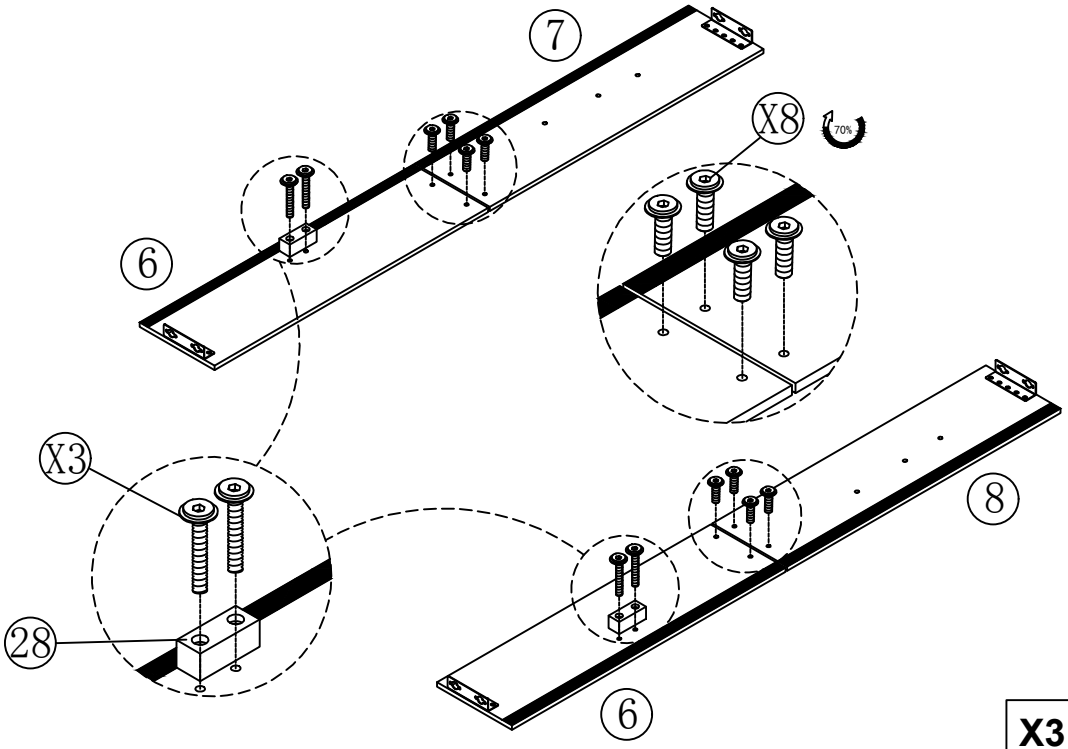

X3		4PCS
X8		8PCS

8

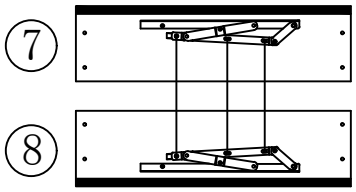

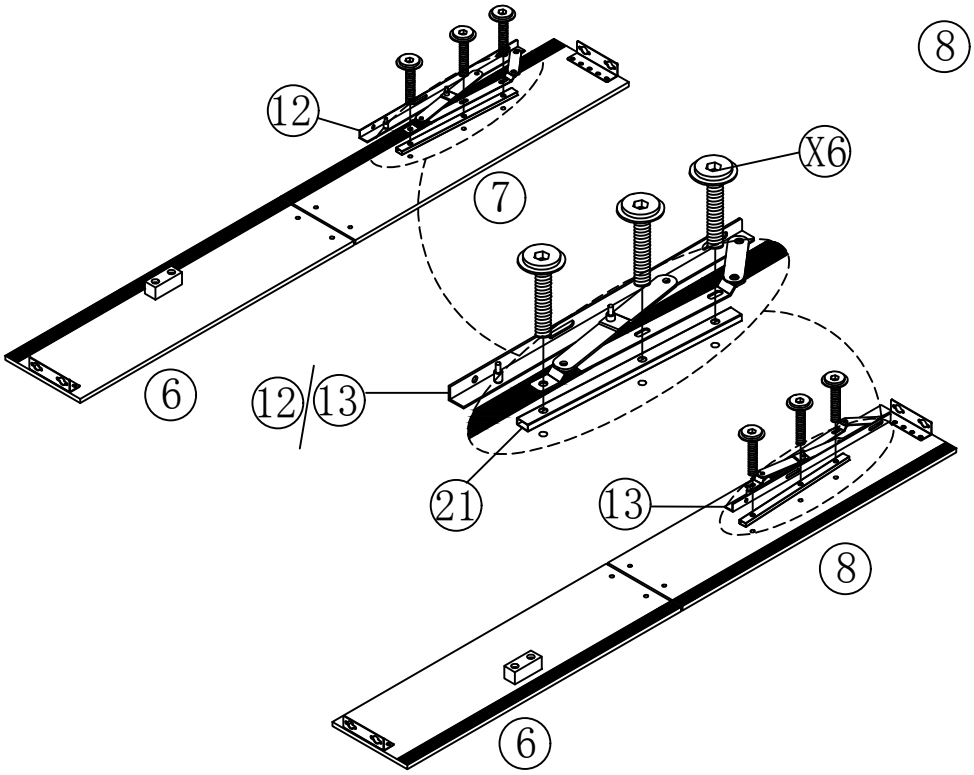

X6		6PCS

9

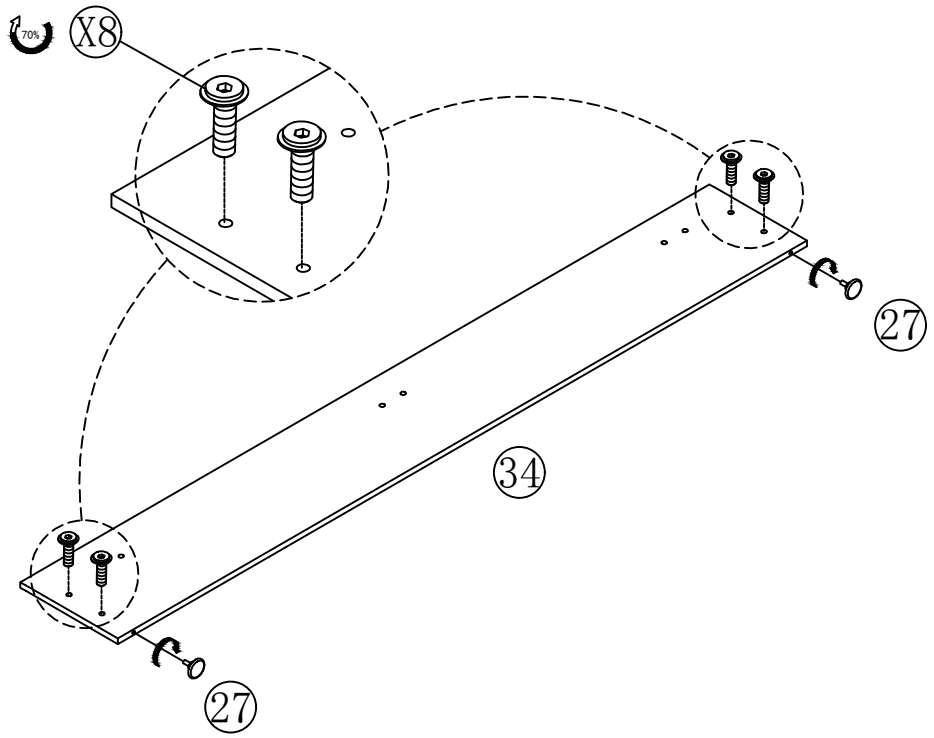

X8		4PCS

10

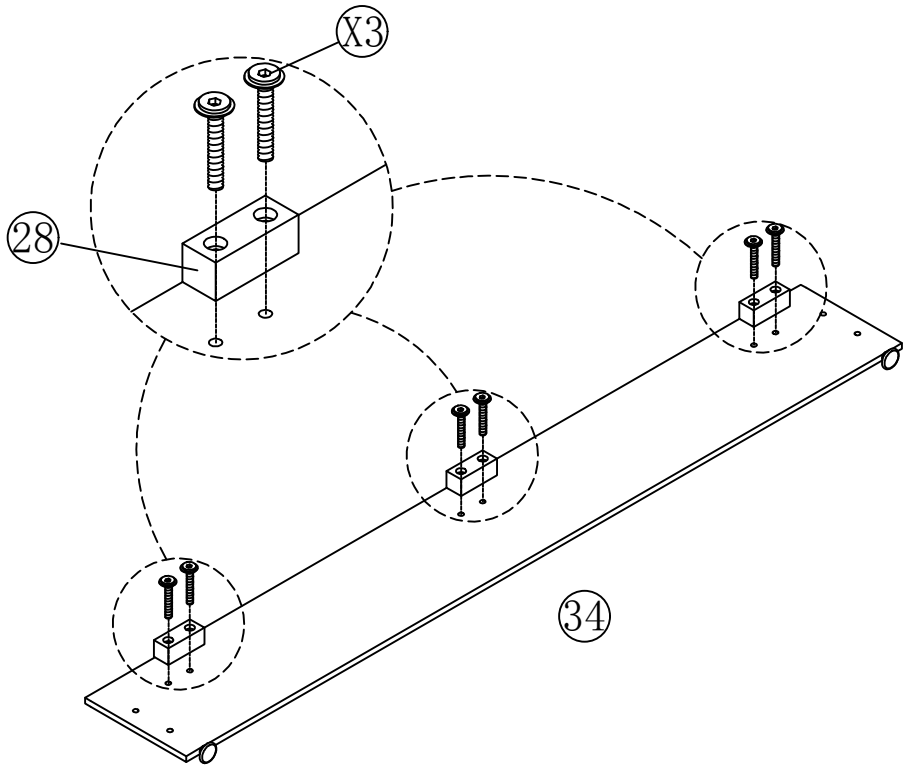

X3		6PCS

11

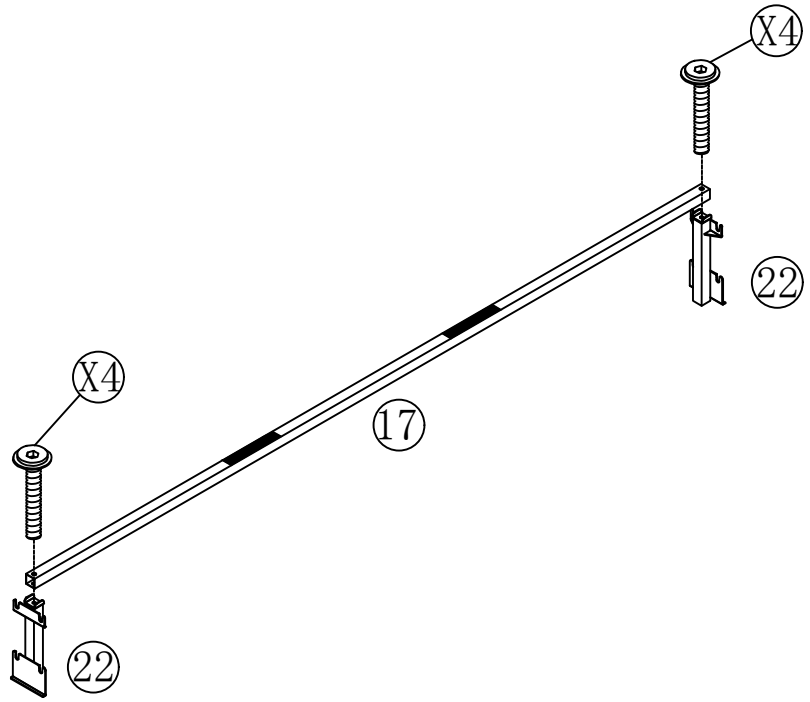

X4		2PCS

12

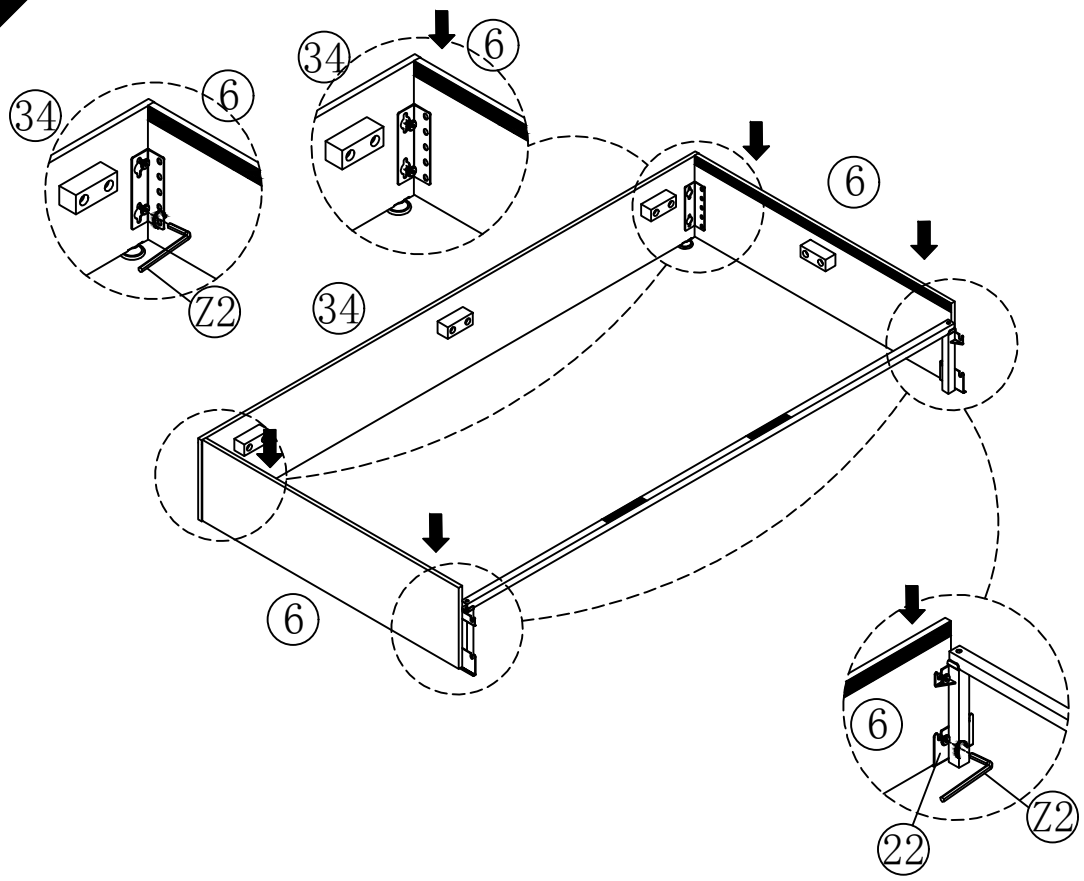

13

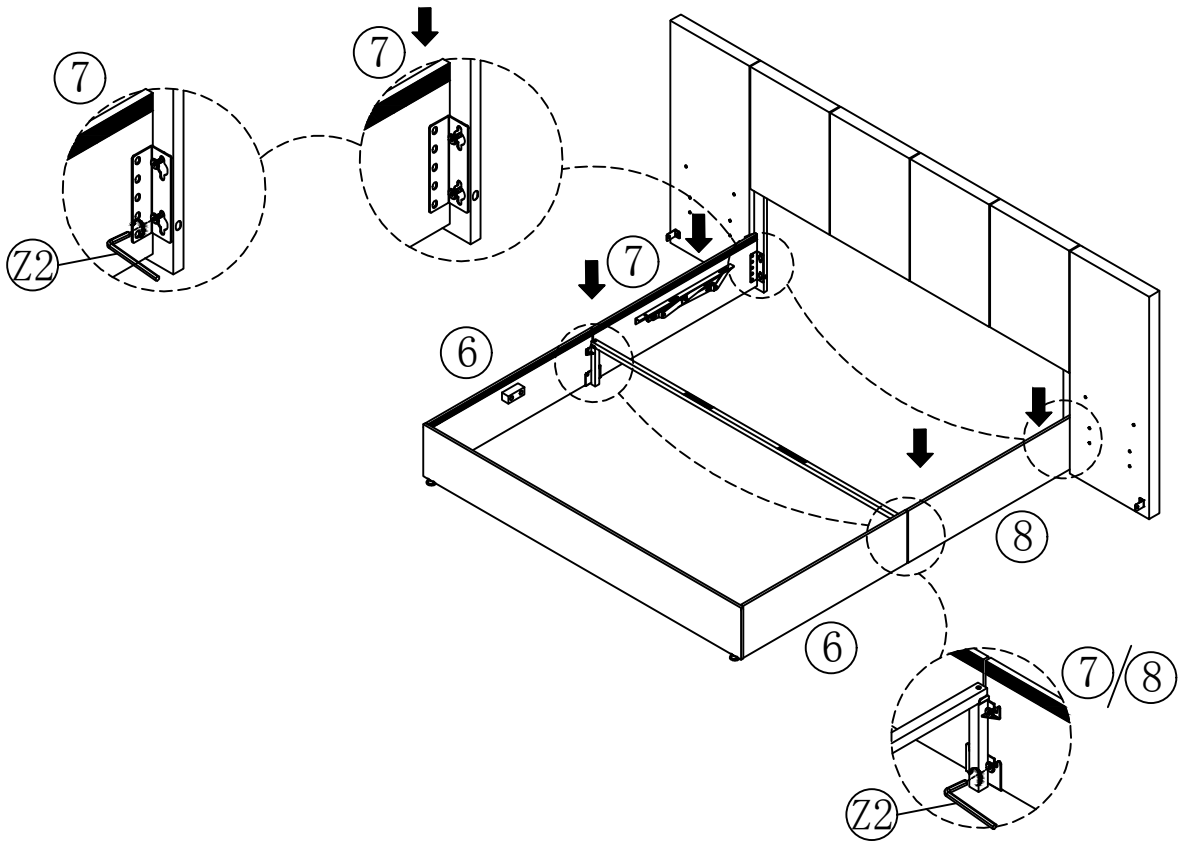

14

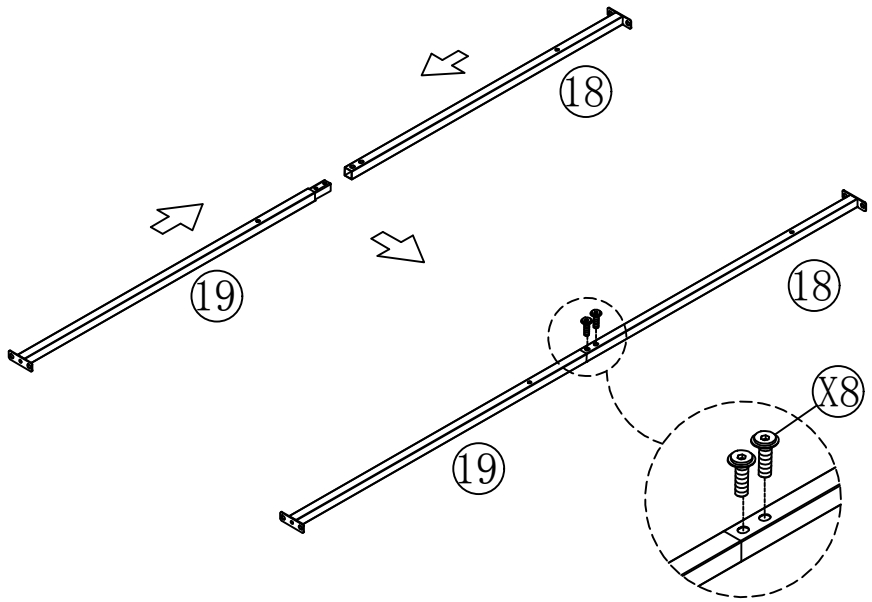

X2

X8		4PCS

15

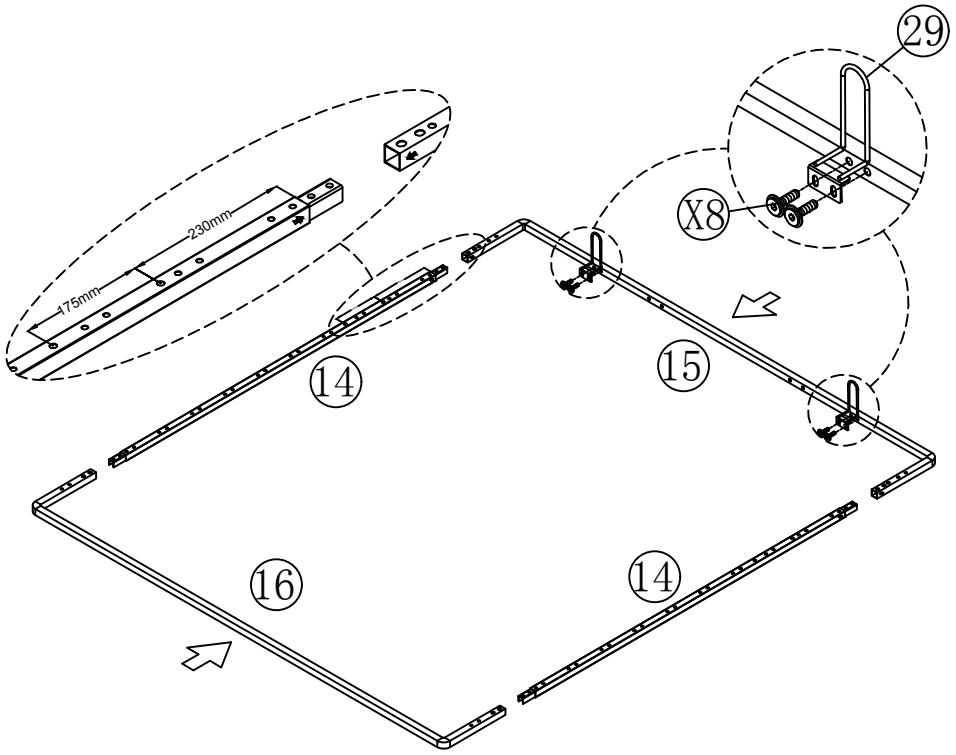

X8		4PCS

16

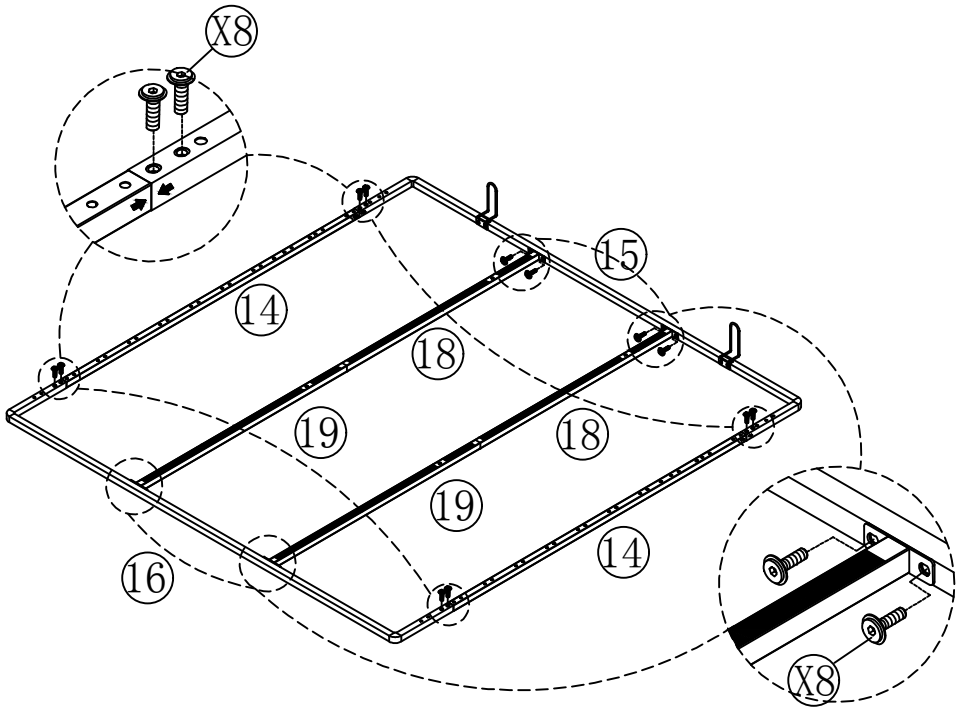

X8		16PCS

17

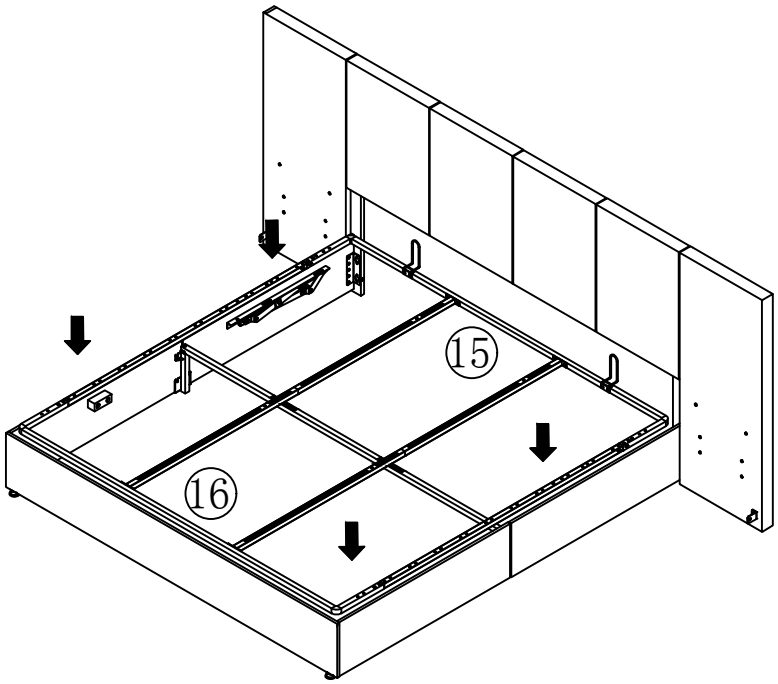

18

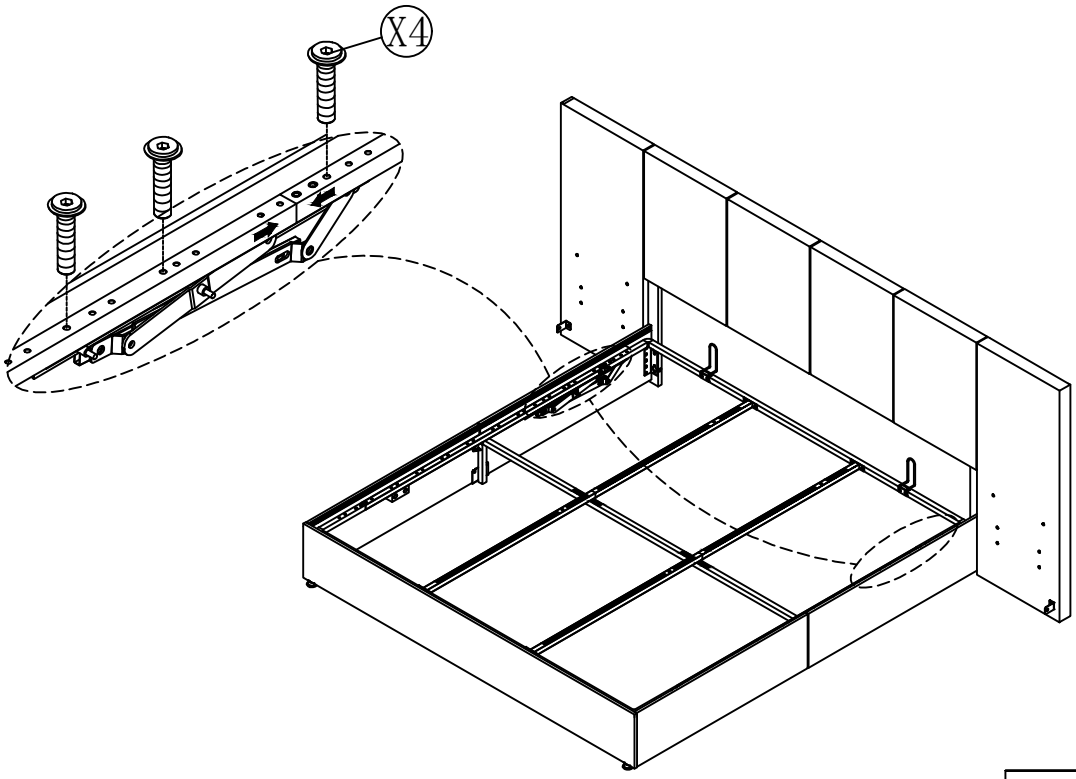

X4		6PCS

19

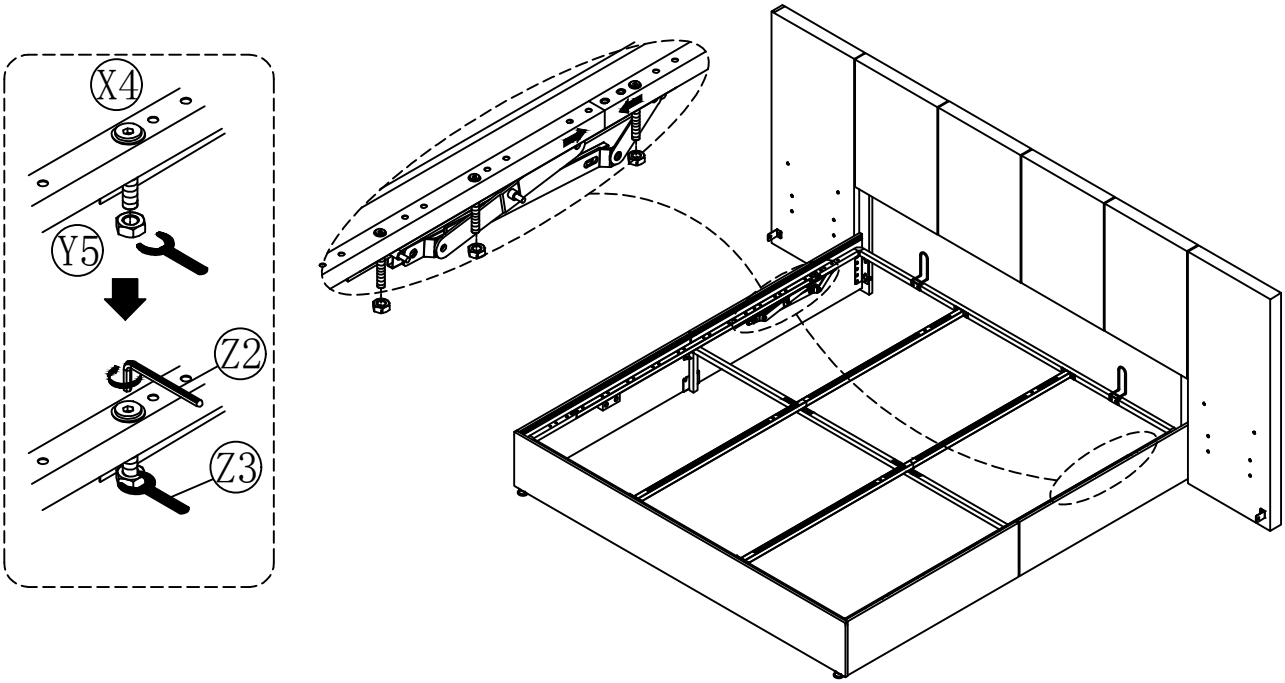

Y5		6PCS

20

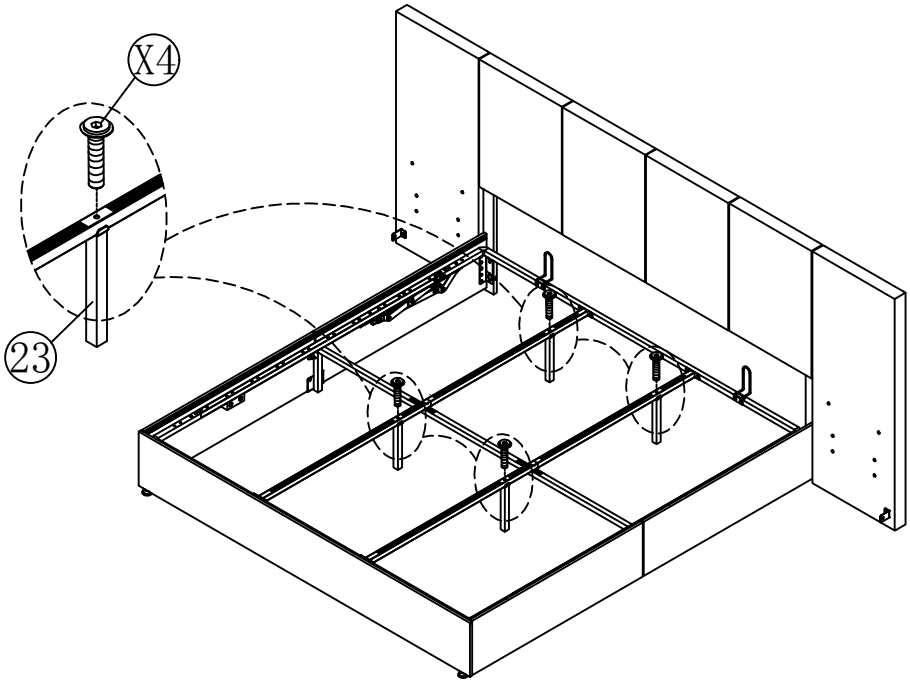

X4		4PCS

21

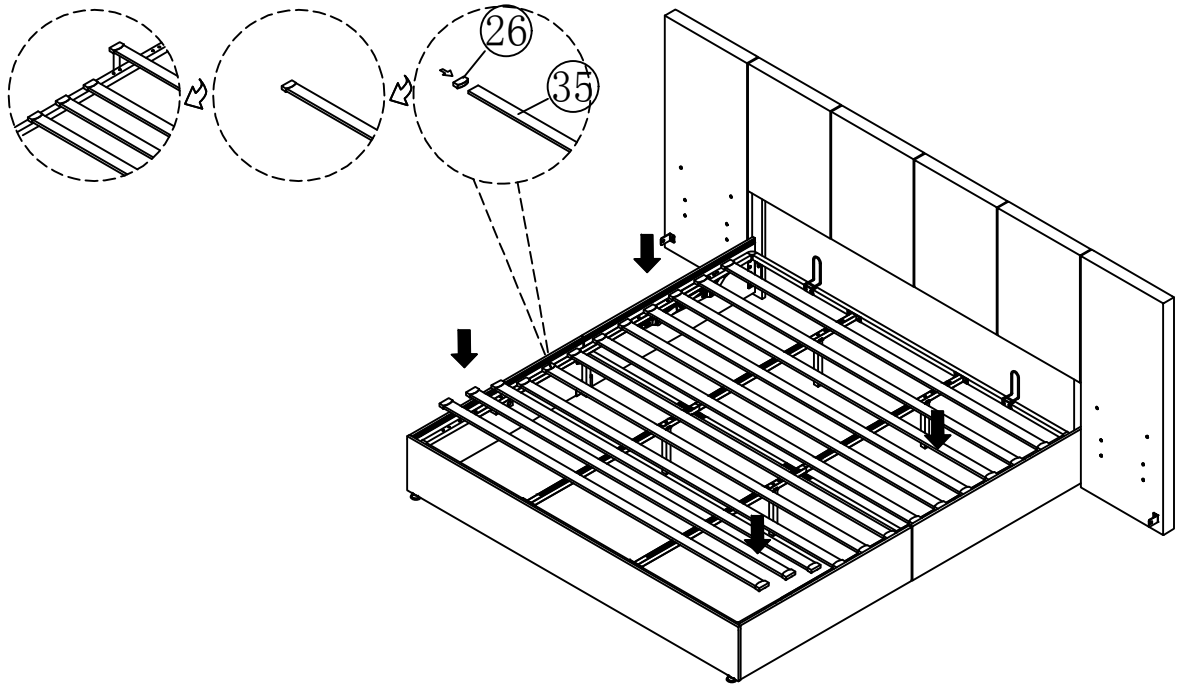

22

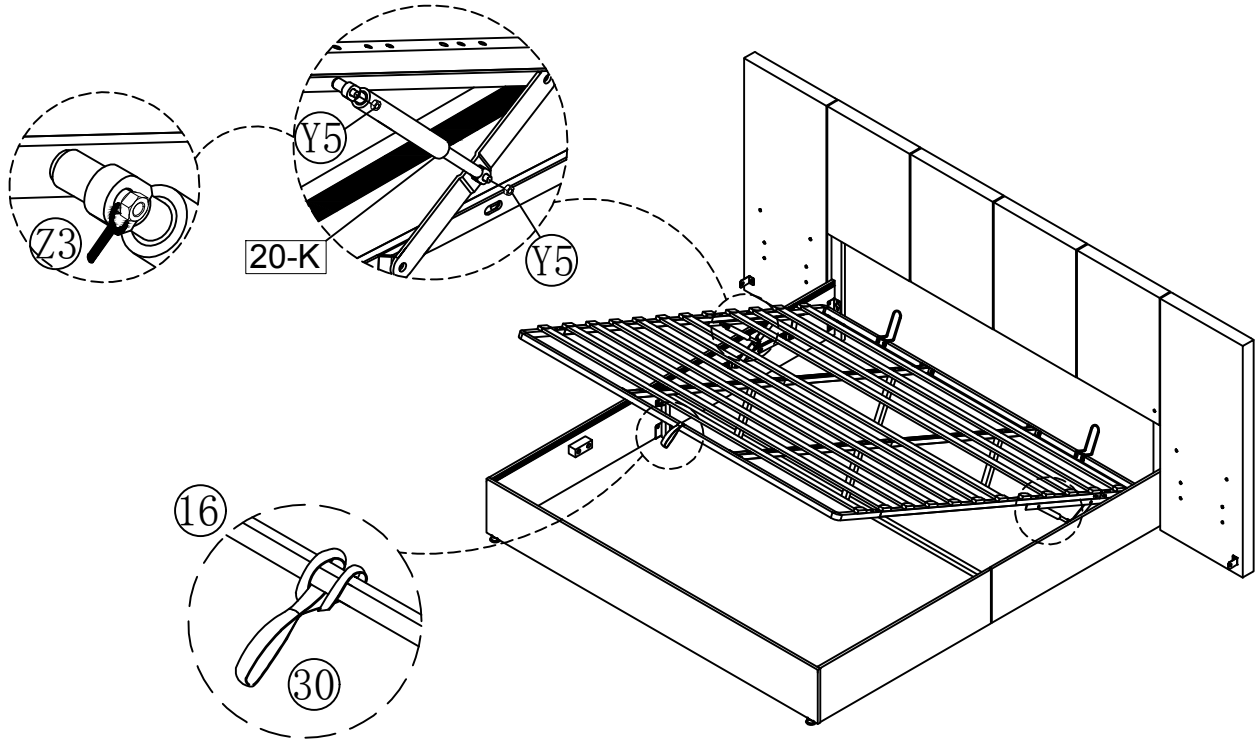

Y5		4PCS

23

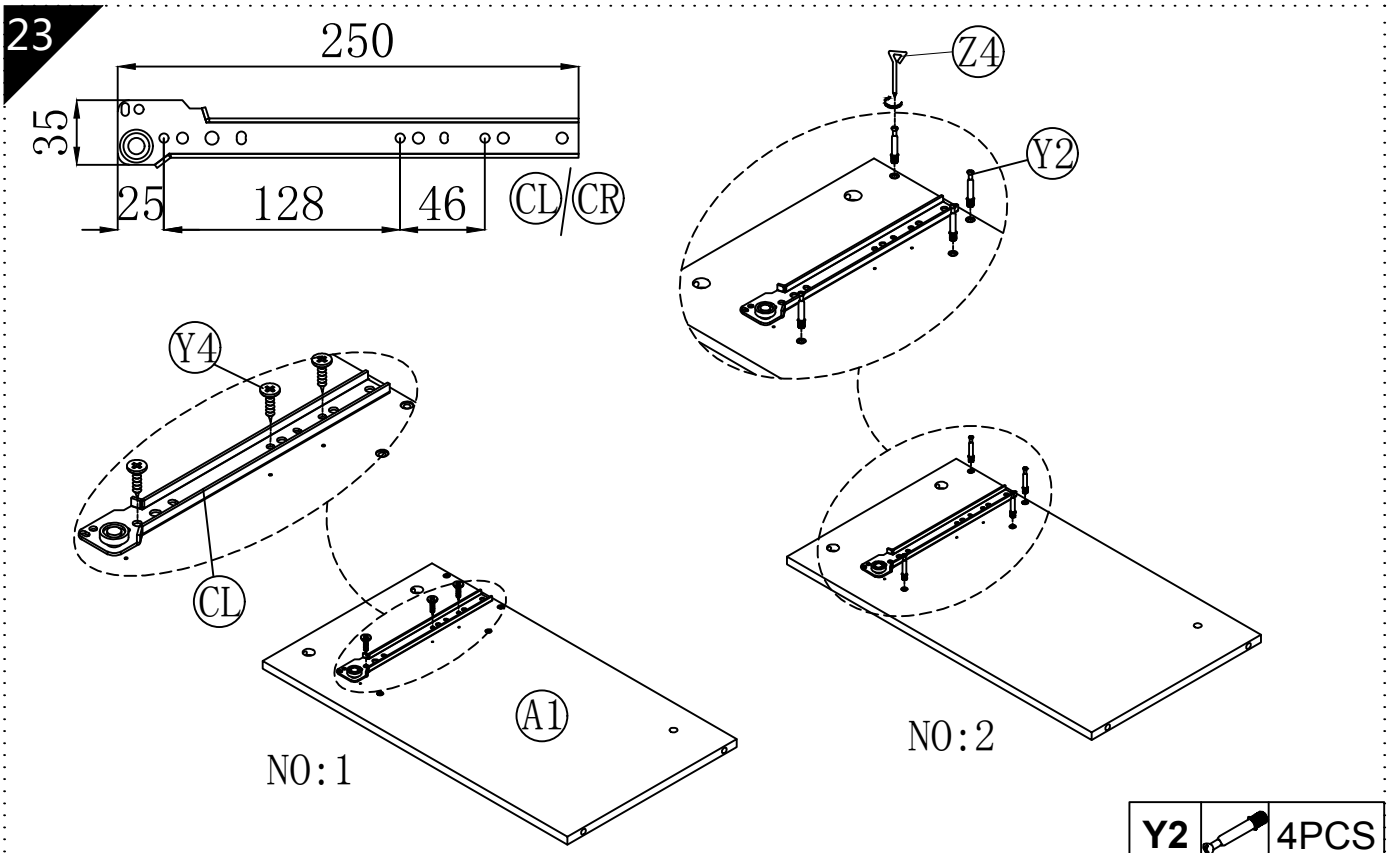

Y2		4PCS
Y4		3PCS

24

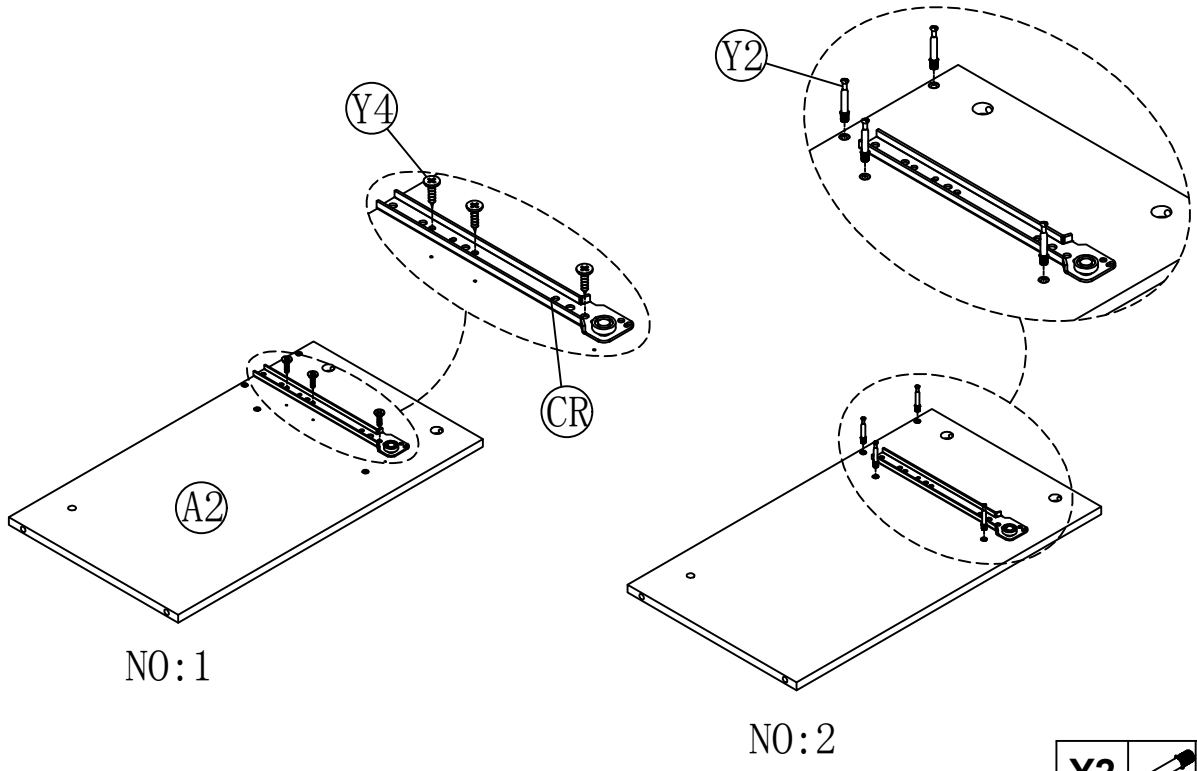

Y2		4PCS
Y4		3PCS

25

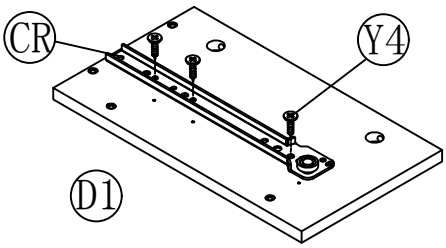

NO:1

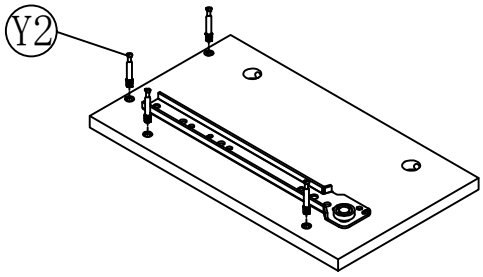

NO:2

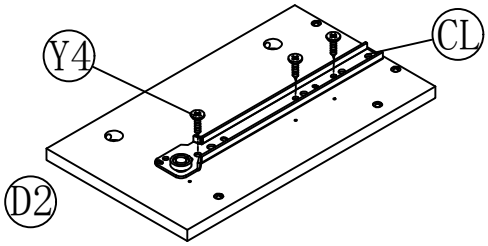

NO:1

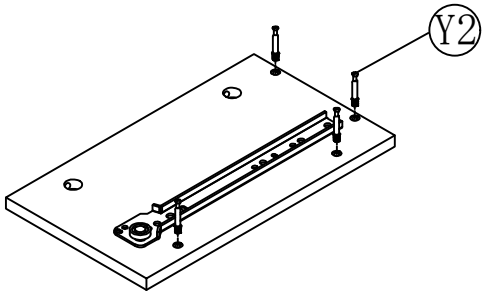

NO:2

Y2		8PCS
Y4		6PCS

26

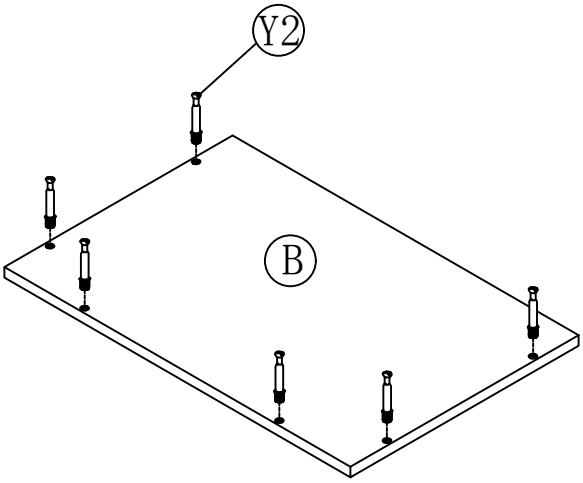

X2

Y2		12PCS

27

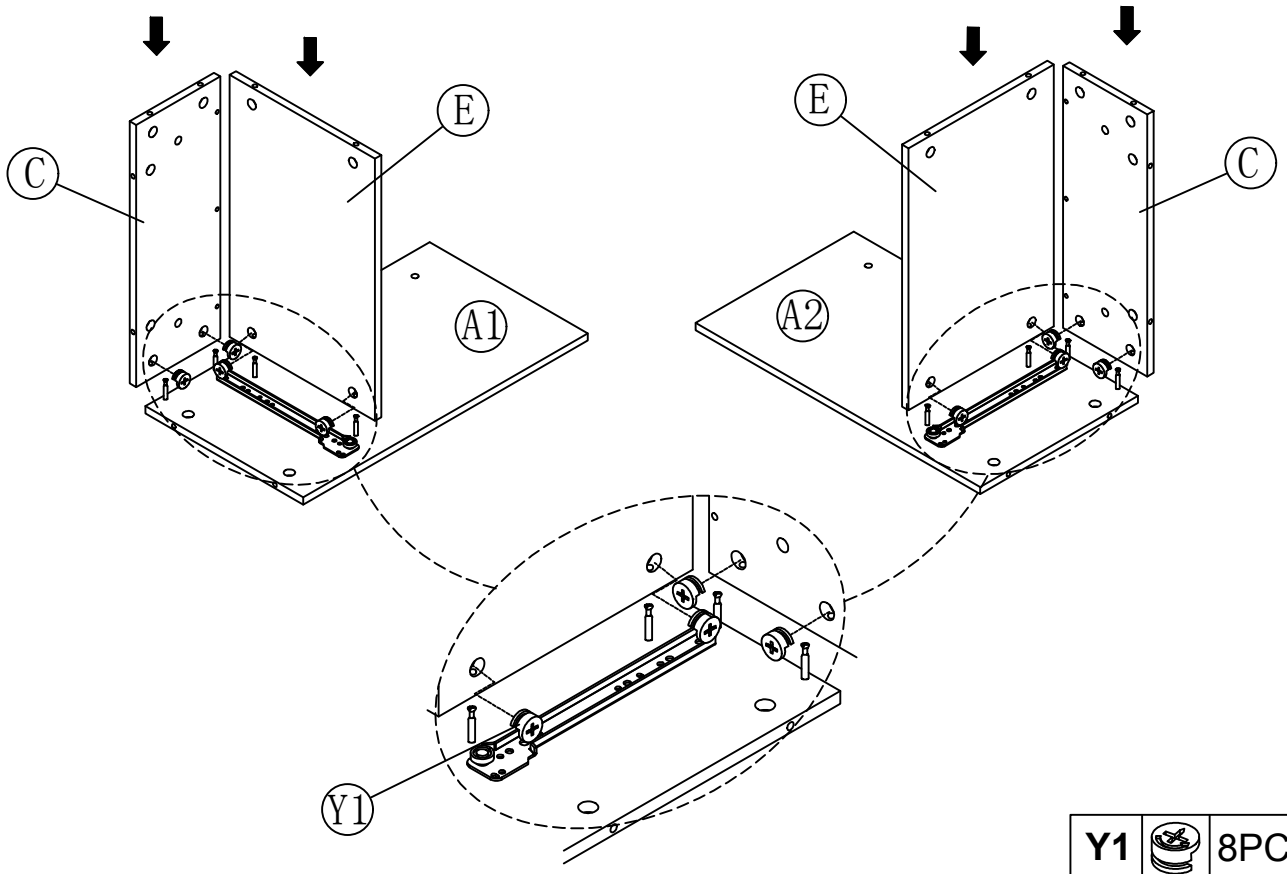

Y1		8PCS

28

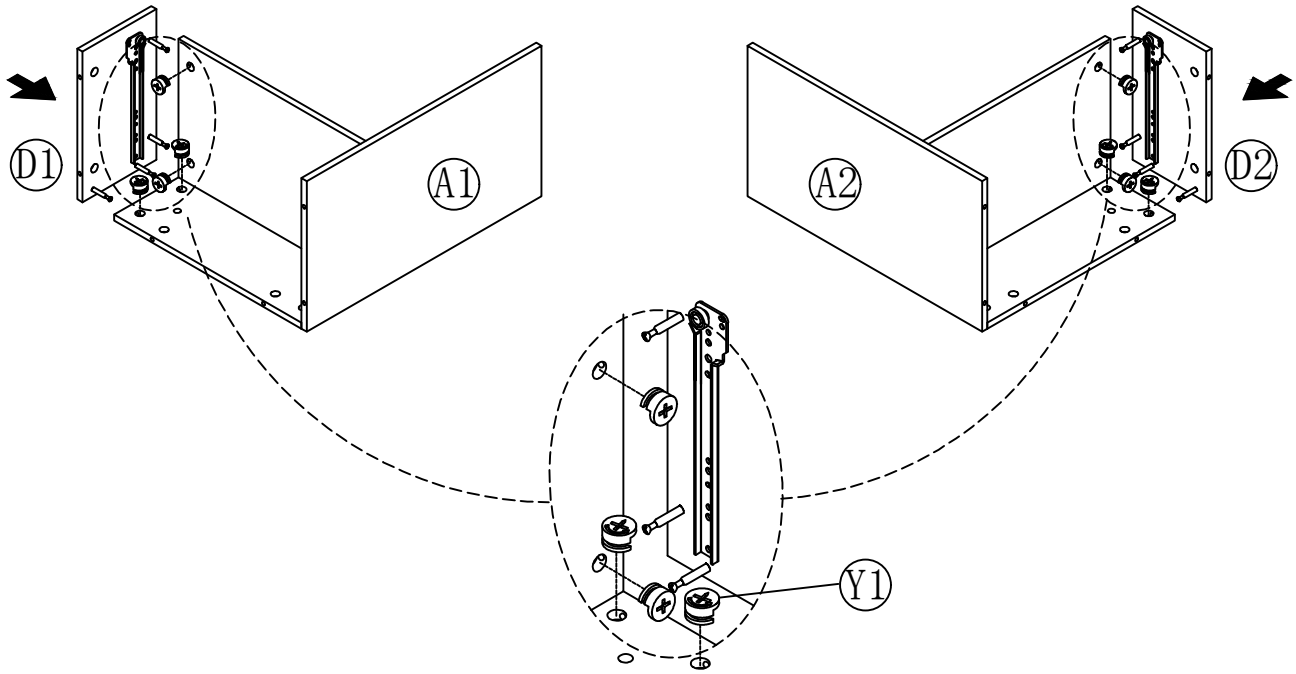

Y1		8PCS

29

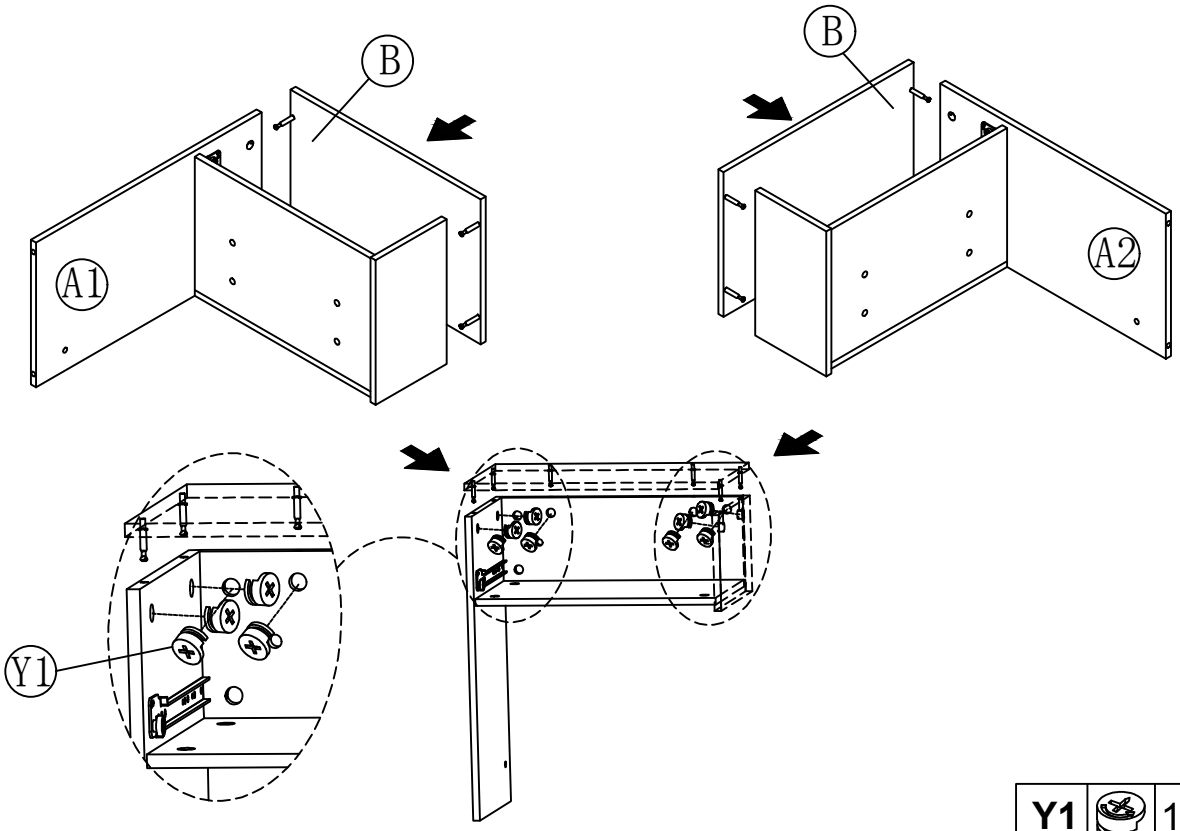

Y1		12PCS

30

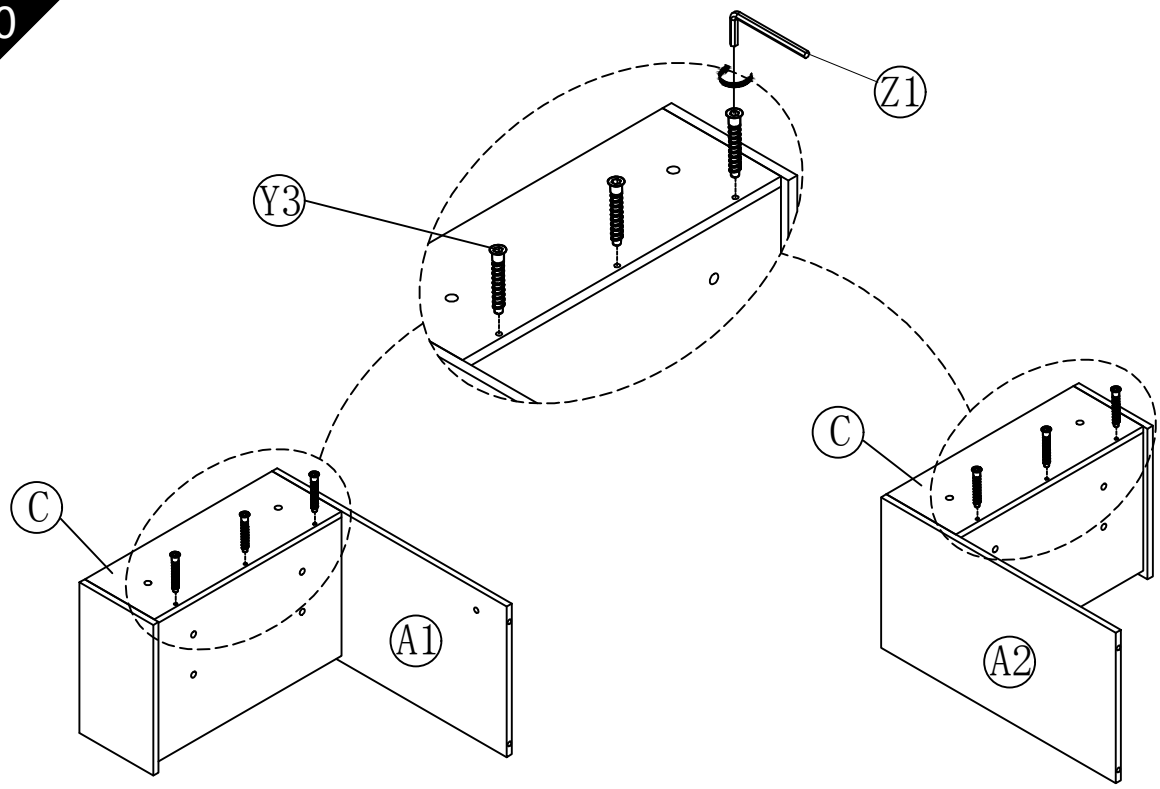

Y3		6PCS

31

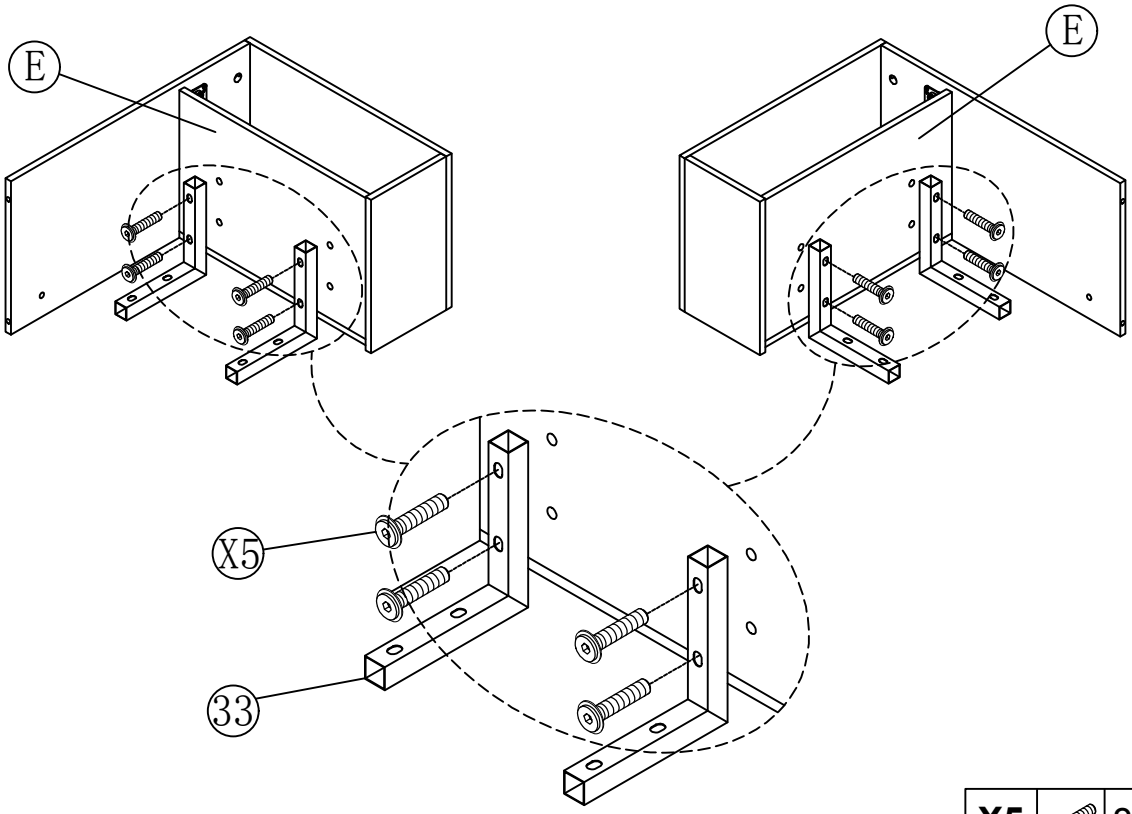

X5		8PCS

32

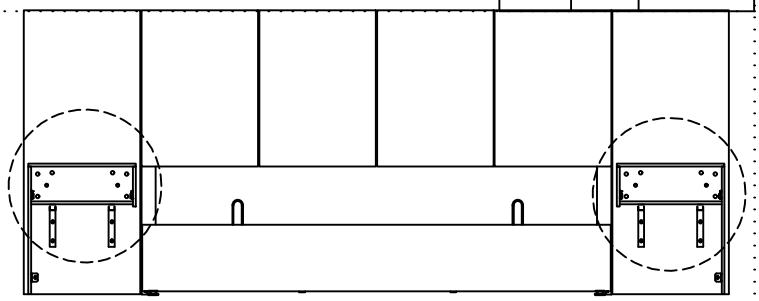

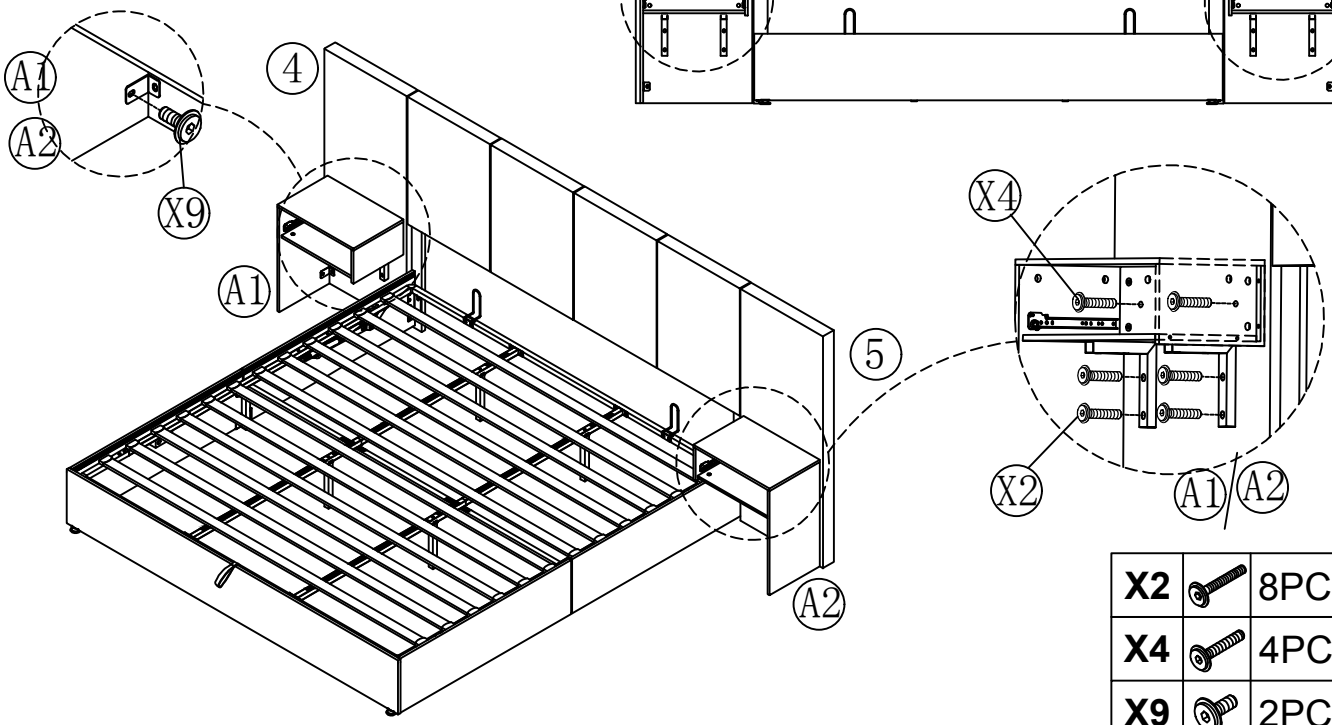

X2		8PCS
X4		4PCS
X9		2PCS

33

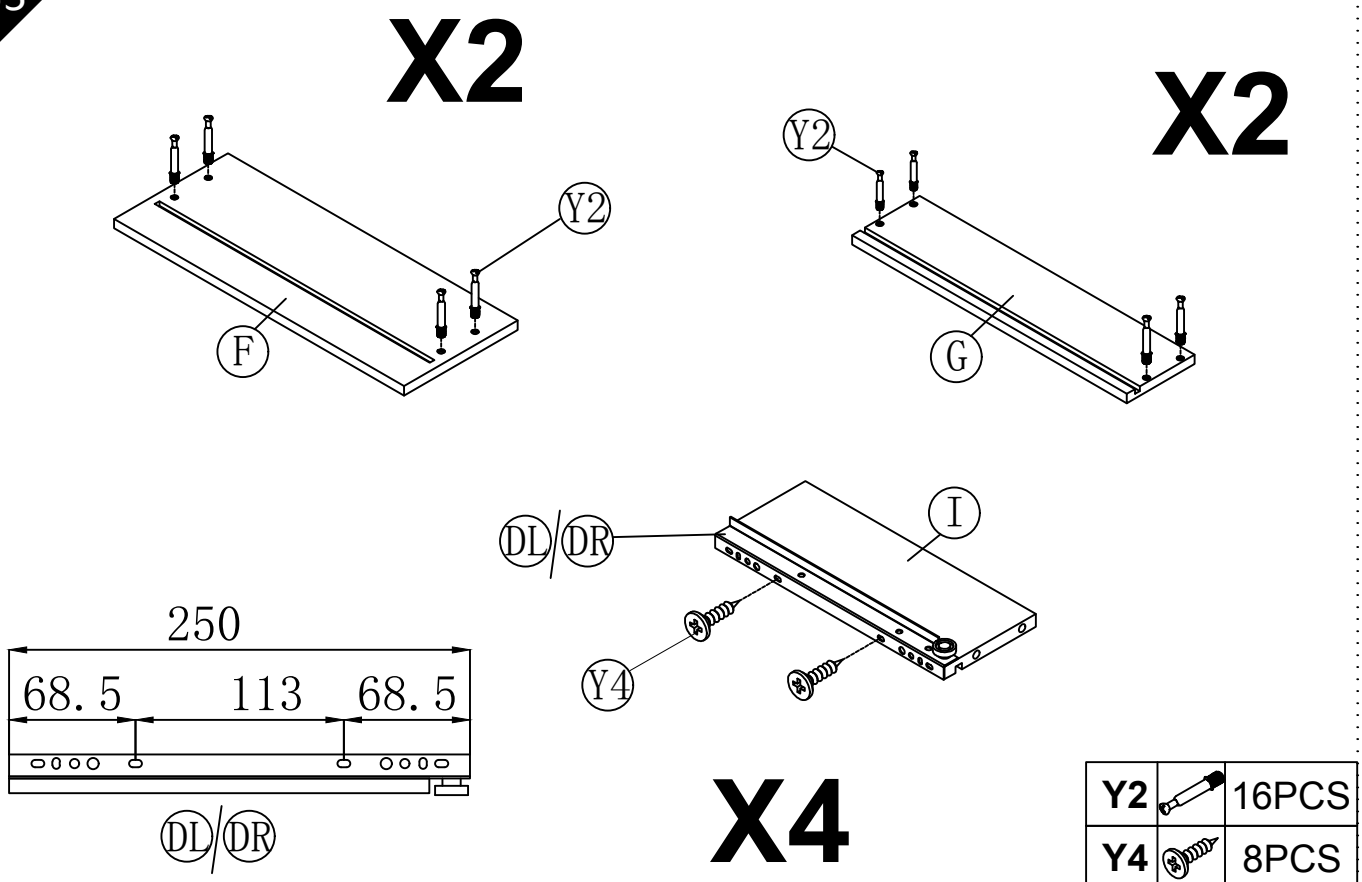

Y2		16PCS
Y4		8PCS

34

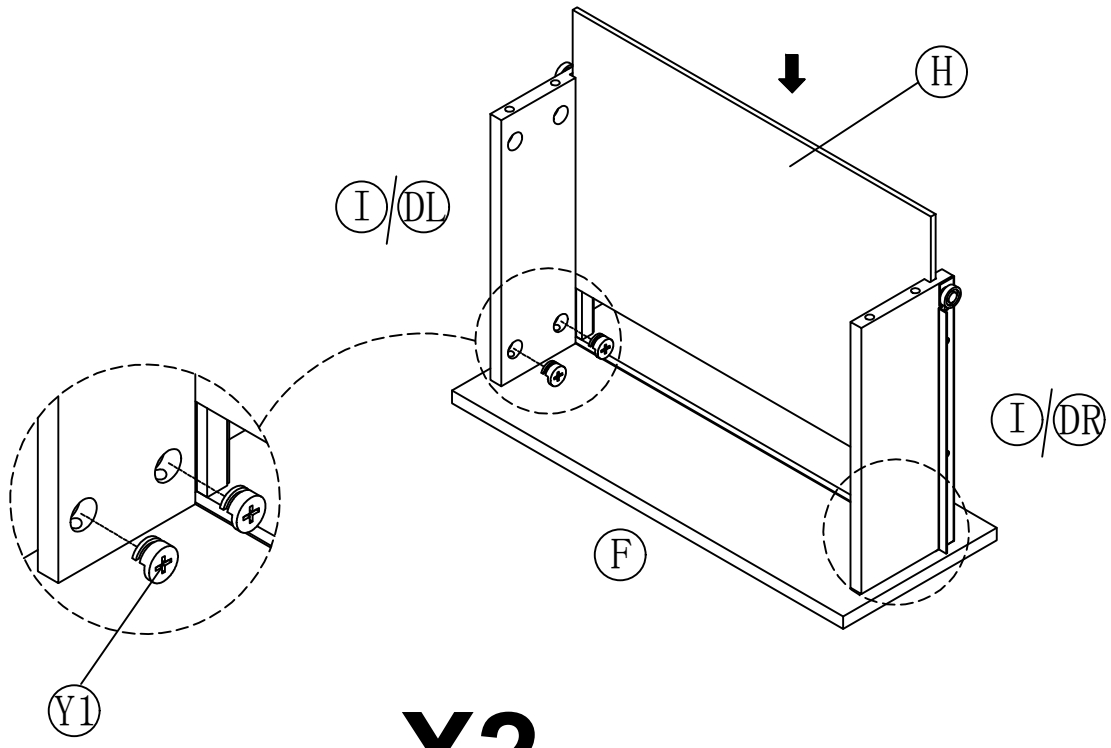

Y1		8PCS

35

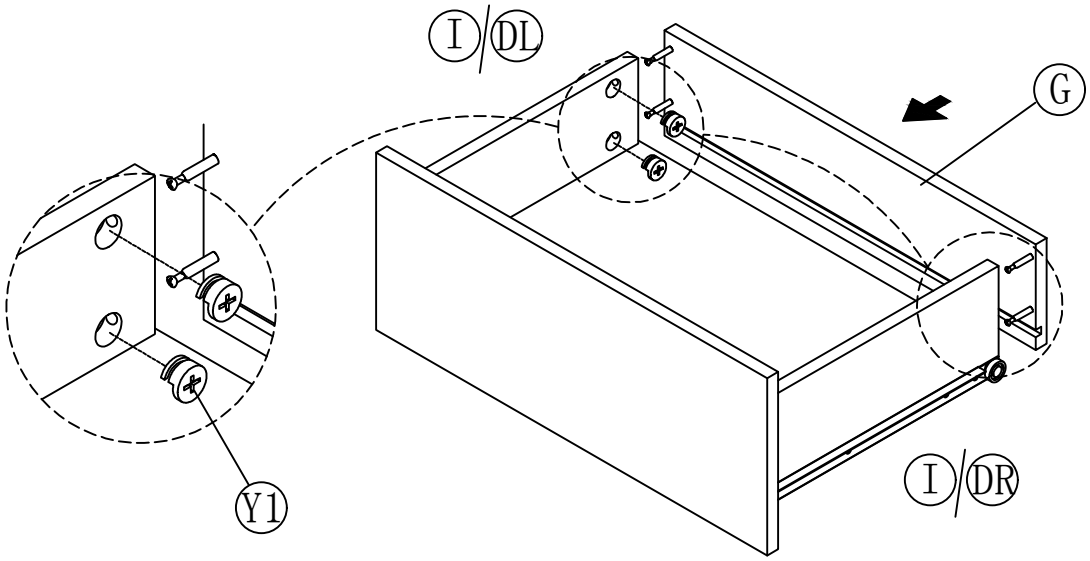

X2

Y1		8PCS

36

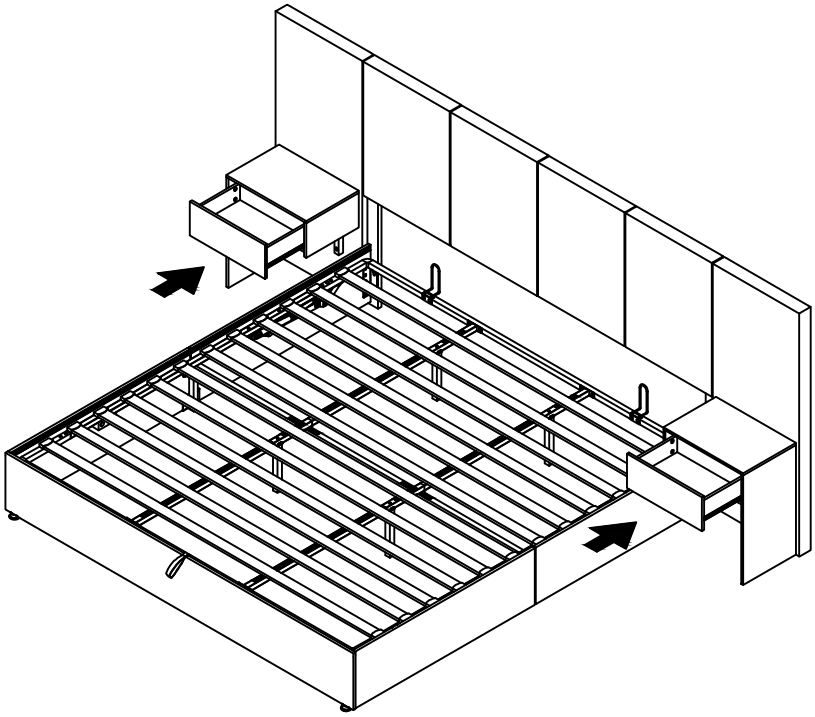

Tighten all Screws

LIMITED WARRANTY

Our team would like to improve the quality of the customer service and make your experience as easy and smooth as possible.

Return Policy: This item could be returned within 30 days without any major reason. After we receive the returned item, we would check it and make sure that is not damaged then we will process the refund. For more details, please remember to check the above terms of RETURN/DAMAGE CLAIM INSTRUCTIONS.

The warranty product is one year from the date of your purchase.If this item is damaged within the warranty period, we will arrange for you the replacement parts free of charge. If the item is damaged for some personal reasons, we could also replace it for you,however, you would need to bear the cost of the replacement parts and shipping fees.

The exceptions or exclusions to this warranty are as follows :

1.Any warranty claim that is submitted after the limited warranty period won't be taken into consideration.We wouldn’t be able to replace the item for you even at your cost.

2.This warranty does not the products which have been purchased by mistake.

In the case of having some defect in the material or handiwork that are covered by this item's warranty, we will repair or replace it for you without charging you any cost within a reasonable period of time. We reserve the damaged parts to be returned to us upon our request.

If you have any questions concerning this warranty,please contact the our Customer Service department by sending an email. Be prepared to provide your name,address, daytime phone number, the model and purchase order number of the product, date of the purchase, and thestore where it was ordered.All of these information provided by you, will helpus to track your order easily and solve your problem in the shortest time.

This warranty gives you specific rights, and you still possess other rights, which vary in terms of each case.

In the end, we hope you can enjoy our product wish you and you family have a great life.