Entry Table

Assembly Instructions - Please keep for future reference

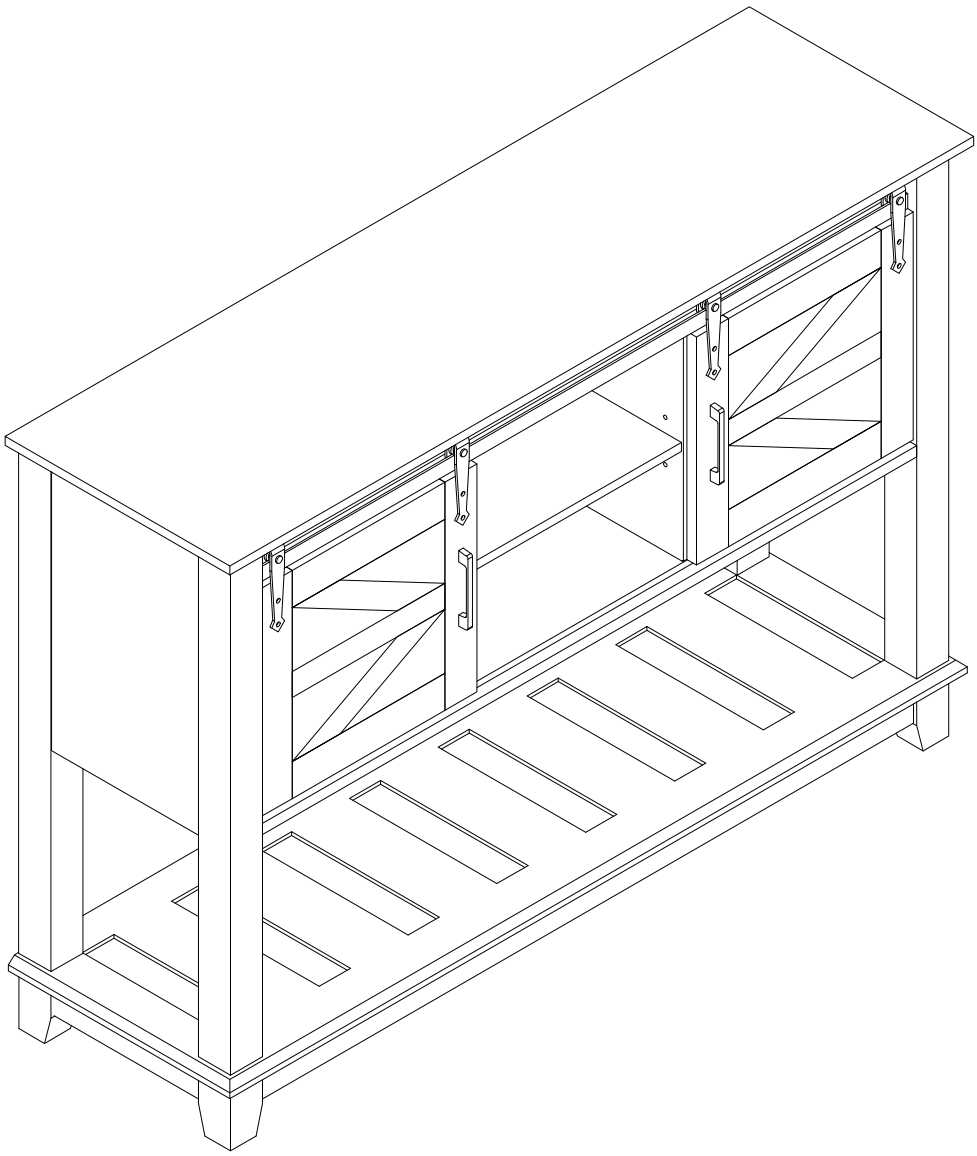

Dimensions

Width - 45.6inch
Depth - 13.78inch
Height - 32inch

Important – Please read these instructions fully before starting assembly

Issue 1 - 01/02/24

Safety and Care Advice

Important – Please read these instructions fully before starting assembly

• Check you have all the components and tools listed on the following pages.

• Remove all fittings from the plastic bags and separate them into their groups.

• Keep children and animals away from the work area, small parts could choke if swallowed.

• Make sure you have enough space to layout the parts before starting.

• During assembly do not stand or put weight on the product, this could cause damage.

• Assemble the item as close to its final position (in the same room) as possible.

• Assemble on a soft level surface to avoid damaging the unit or your floor.

• Parts of the assembly will be easier with 2 people.



• To reduce the likelihood of damaging your product please ensure that your power drill is set on a low torque setting.

Care and maintenance

• Only clean using a damp cloth and mild detergent, do no use bleach or abrasive cleaners.

• From time to time check that there are no loose screws on this unit.

• This product should not be discarded with household waste. Take to your local authority waste disposal centre.

Handy Hints

• Assemble all parts and bolts loosely during assembly, only once the product is complete should you fully tighten the bolts

• Regularly check and ensure That all bolts and fittings are tightened properly.

WARNING
In order to help prevent overturning – please follow these instructions

To help prevent product toppling over please follow the below steps:-

Use the anti tip stap or wall fixing method provided (if applicable)
Do not allow children to climb or hang on the furniture
Do not open more than one drawer at a time
Do not place heavy items in the top drawers
Do not place heavy items on top of the furniture, unless the furniture has been designed for this purpose

please note that only the anti tip strap is provided.
You will need to provide wall plugs and screws applicable for your wall type

Components - Panels

Please check you have all the panels listed below

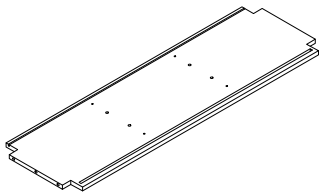

1 (1094X330X15mm)X1

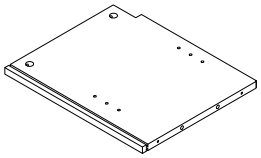

2 (368X305X15mm)X1

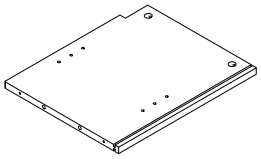

3 (368X305X15mm)X1



4 (683X50X50mm)X1



5 (683X50X50mm)X2



6 (683X50X50mm)X1



7 (683X50X50mm)X1

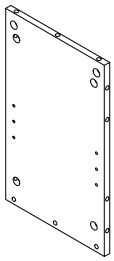

8 (385X230X12mm)X2

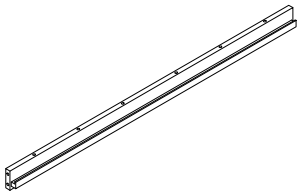

9 (1020x60X31mm)X1

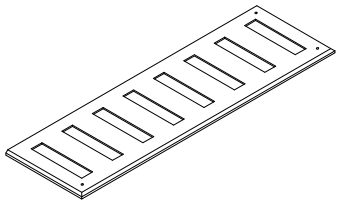

10 (1150X345X17mm)X1

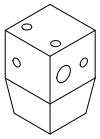

11 (85X50X50mm)X2

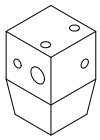

12 (85x50X50mm)X2

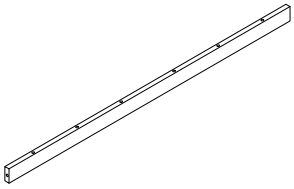

13 (1020X45X15mm)X2

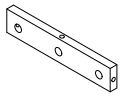

14 (230X45X15mm)X2

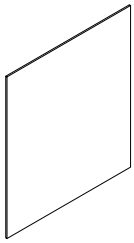

15 (334X378X2.7mm)X2

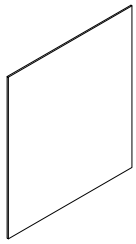

16 (350X378X2.7mm)X1

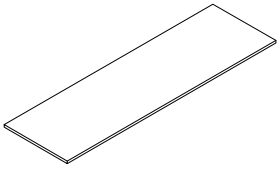

17 (1160X350X25mm)X1

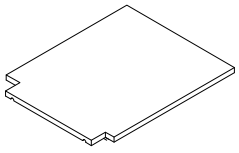

18 (360X288X12mm)X1

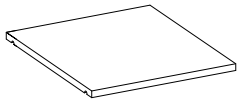

19 (340X288X12mm)X1

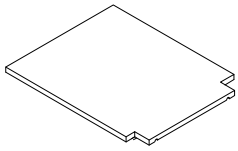

20 (360X288X12mm)X1

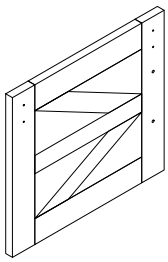

21 (308X338X15mm)X1

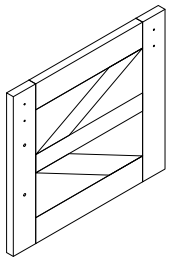

22 (308X338X15mm)X1

Components - Fittings

Please check you have all the panels listed below

Note: The quantitie below are the correcet amount to complete the assembly. In some cases more fittings may be supplied than are required.

A 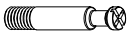 Male Camlock x 50	**B**  Female Camlock x50	**C**  Dowel x 34
D  4*14mm Screw x 20	**E** 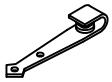 Pulley x 4	**F**  Plate x 4
G 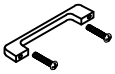 Handle & Fixings x 2	**H**  Adjustable Foot x 1	**I**  Protective Feet x 4
J 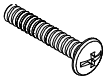 6*30mm Screw x4	**K**  Shelf Support Pin x 12	**L**  5*45mm Screw x 4
M  Back Panel Stiffener x 12	**N**  Wall Eixing Pack x 2	

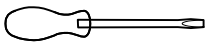

Tools required

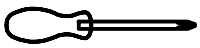

Phillips screwdriver
(medium & large)

Ruler - Use this ruler to help correctly identify the screws

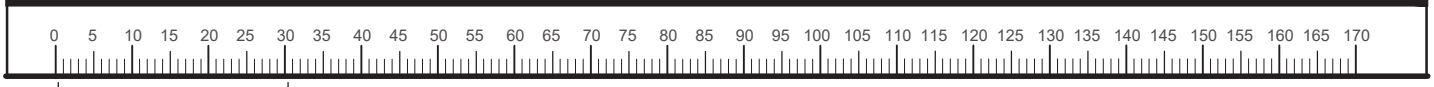

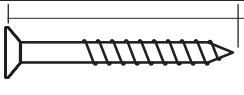

The screws length is measured from the head to the point (30mm screw shown).

Using Camlocks

Step 1

Connect the male camlock as diected in the assembly instructions using a scewdriver.

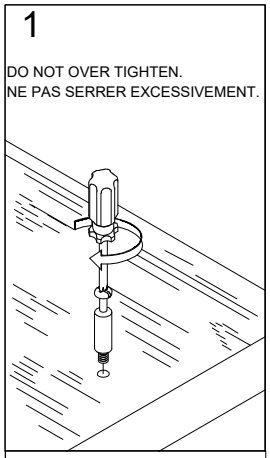

Step 2

Push the male camlock into the entry hole.

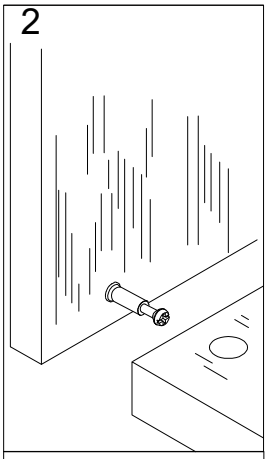

Step 3

Insert the femle camlock as shown in the instruction.

Note：ensure that the arrow on the top of the camlock points towards the entry hole for the male camlock.

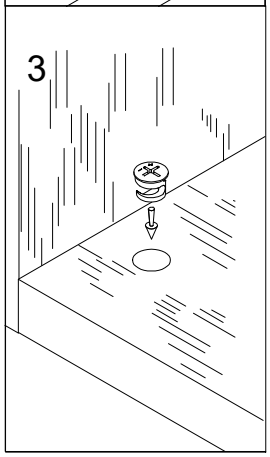

Step 4

Turn the female camlock clockwise with a screwdriver.

You should feel a click when the camlock is locked in place.

The joint is now secure.

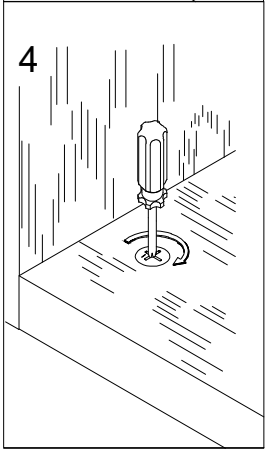

Assembly Instructions

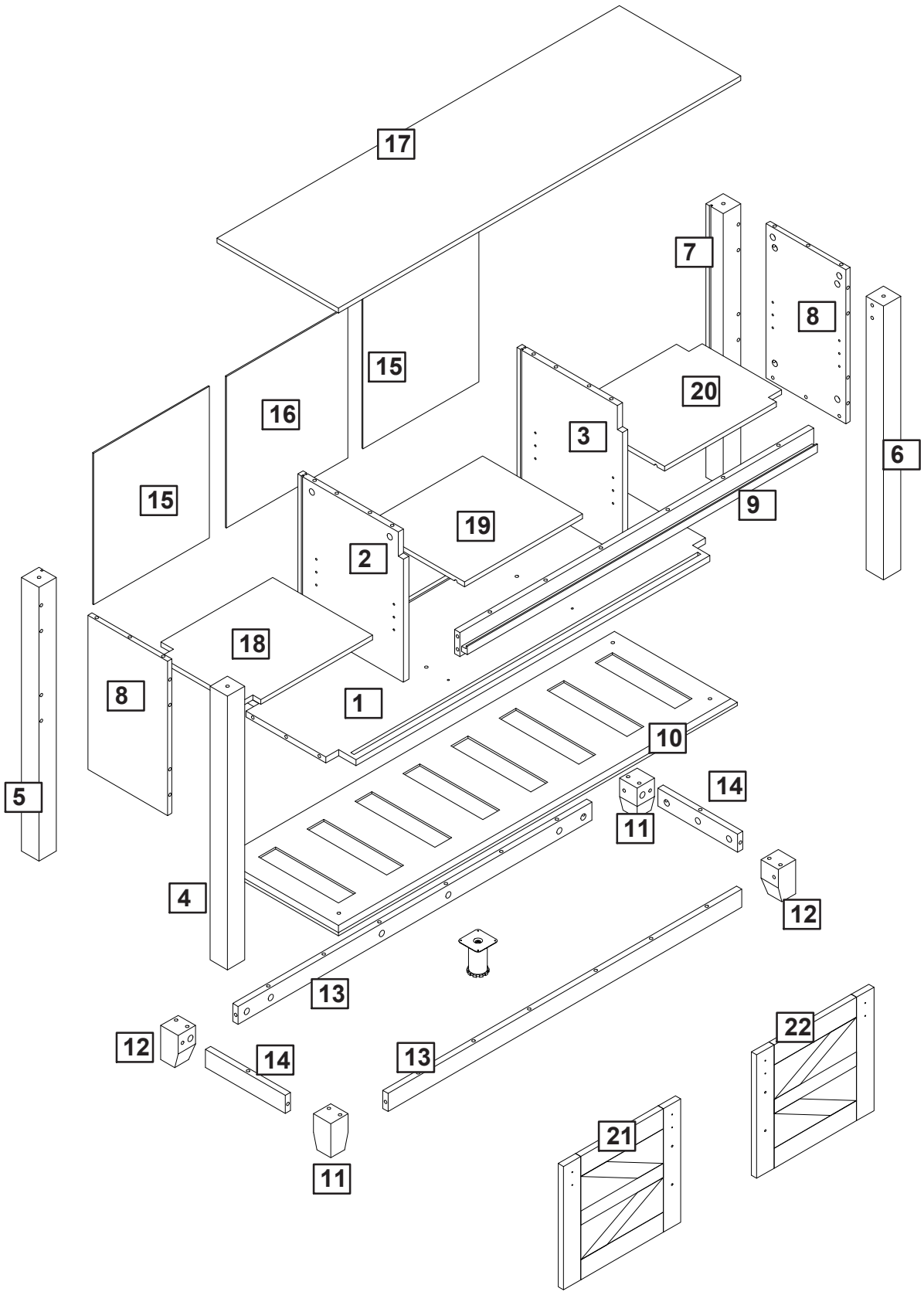

Assembly Instructions

Step 1

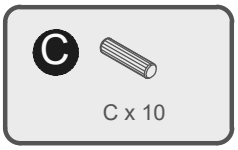

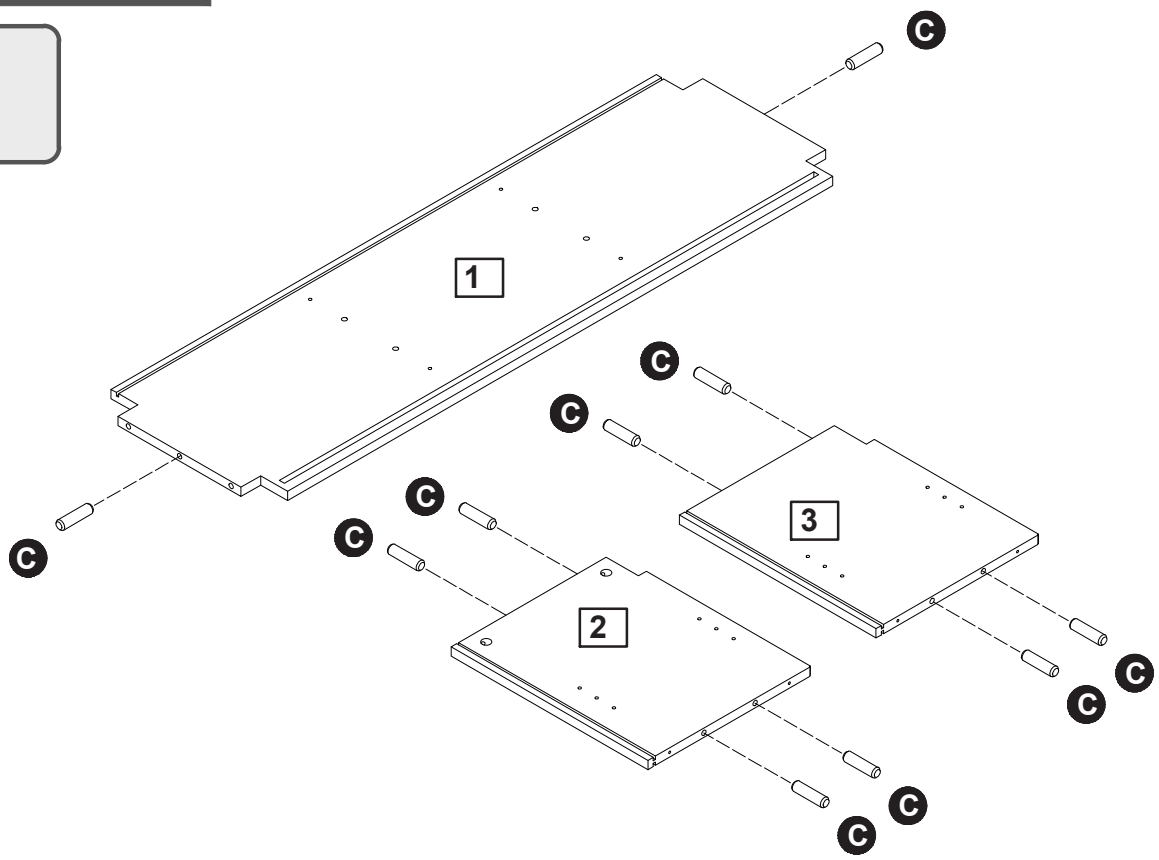

Step 2

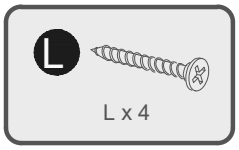

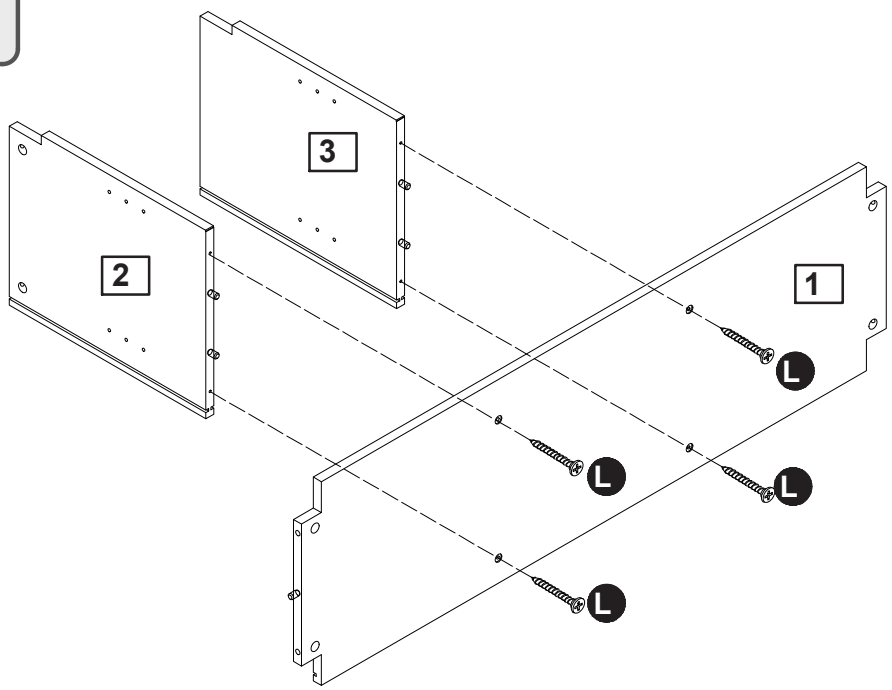

Assembly Instructions

Step 3

A x 12

C x 4

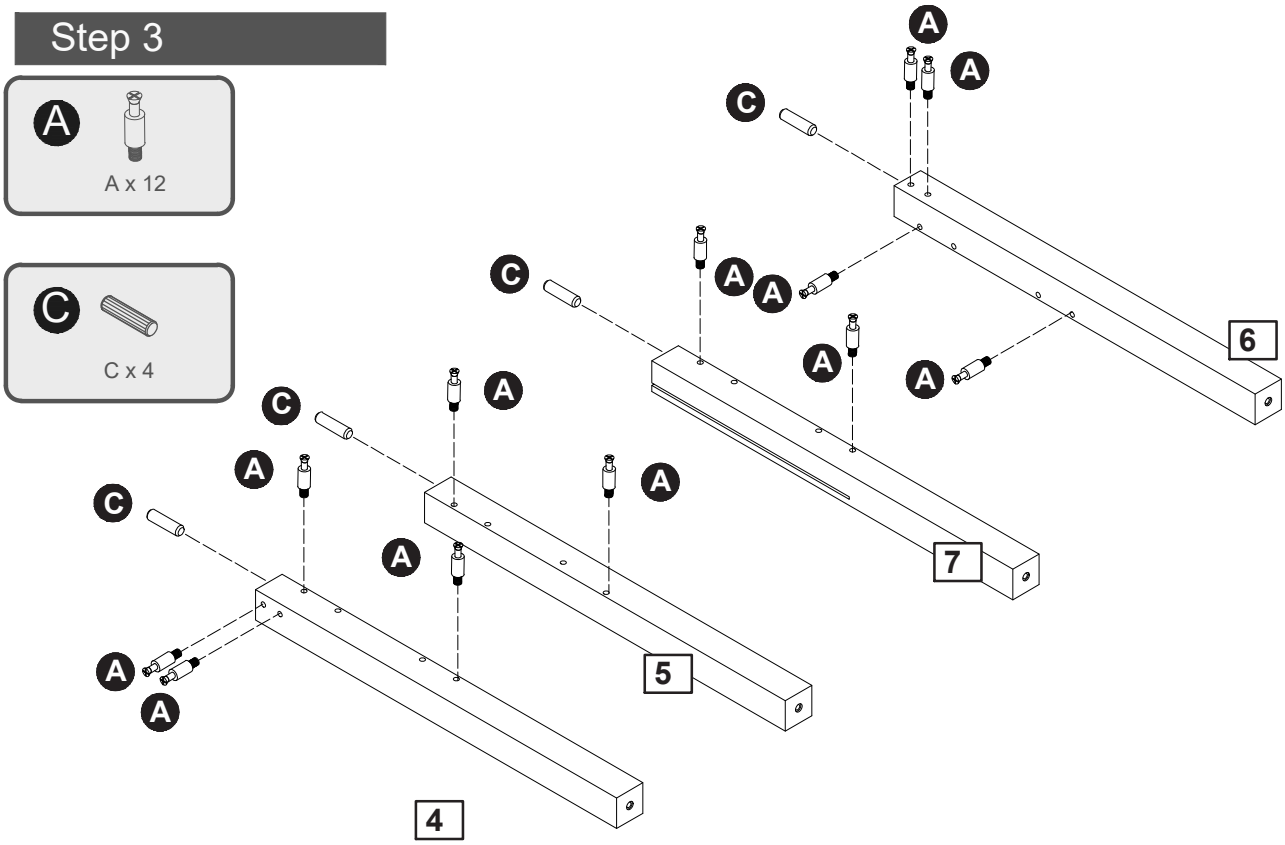

Step 4

A x 4

C x 12

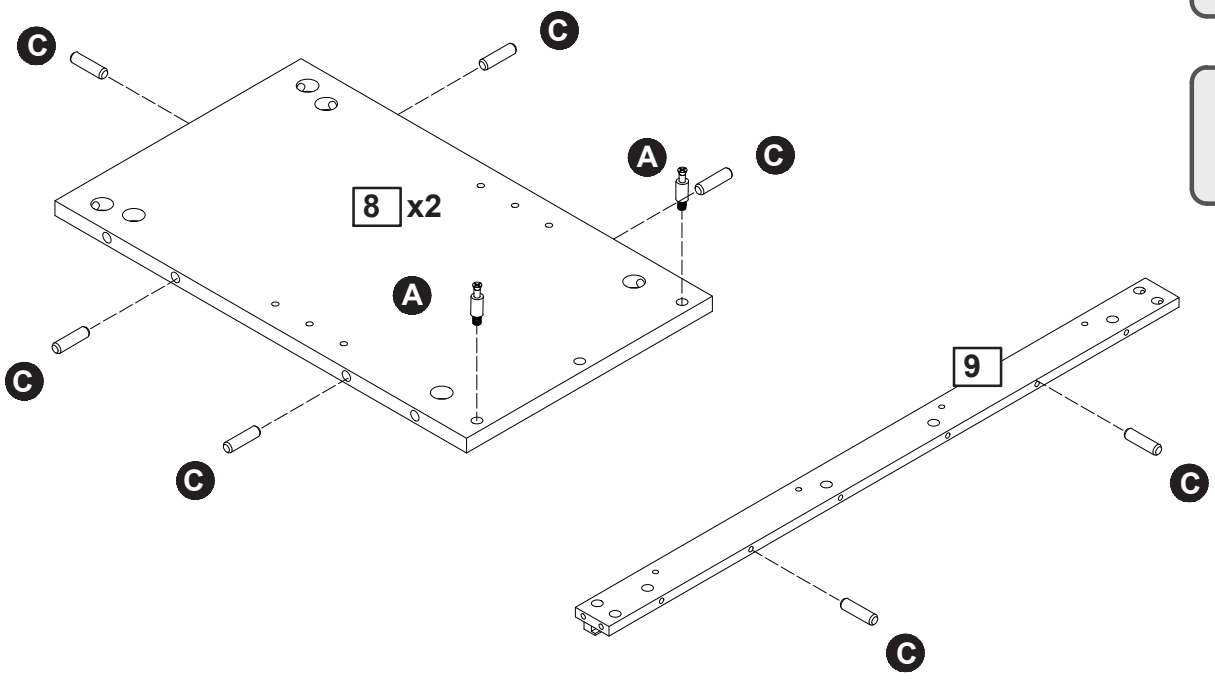

Assembly Instructions

Step 5

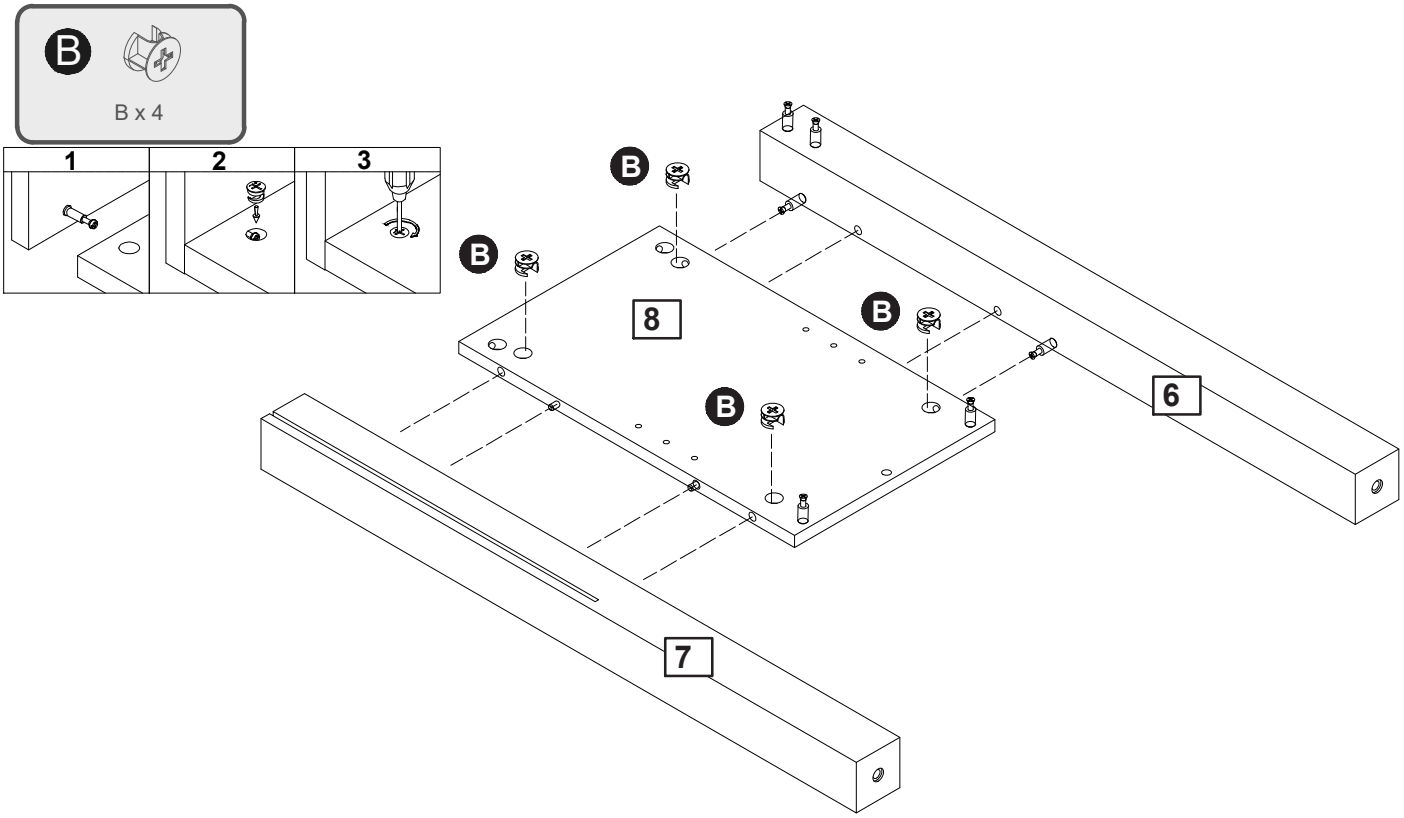

Step 6

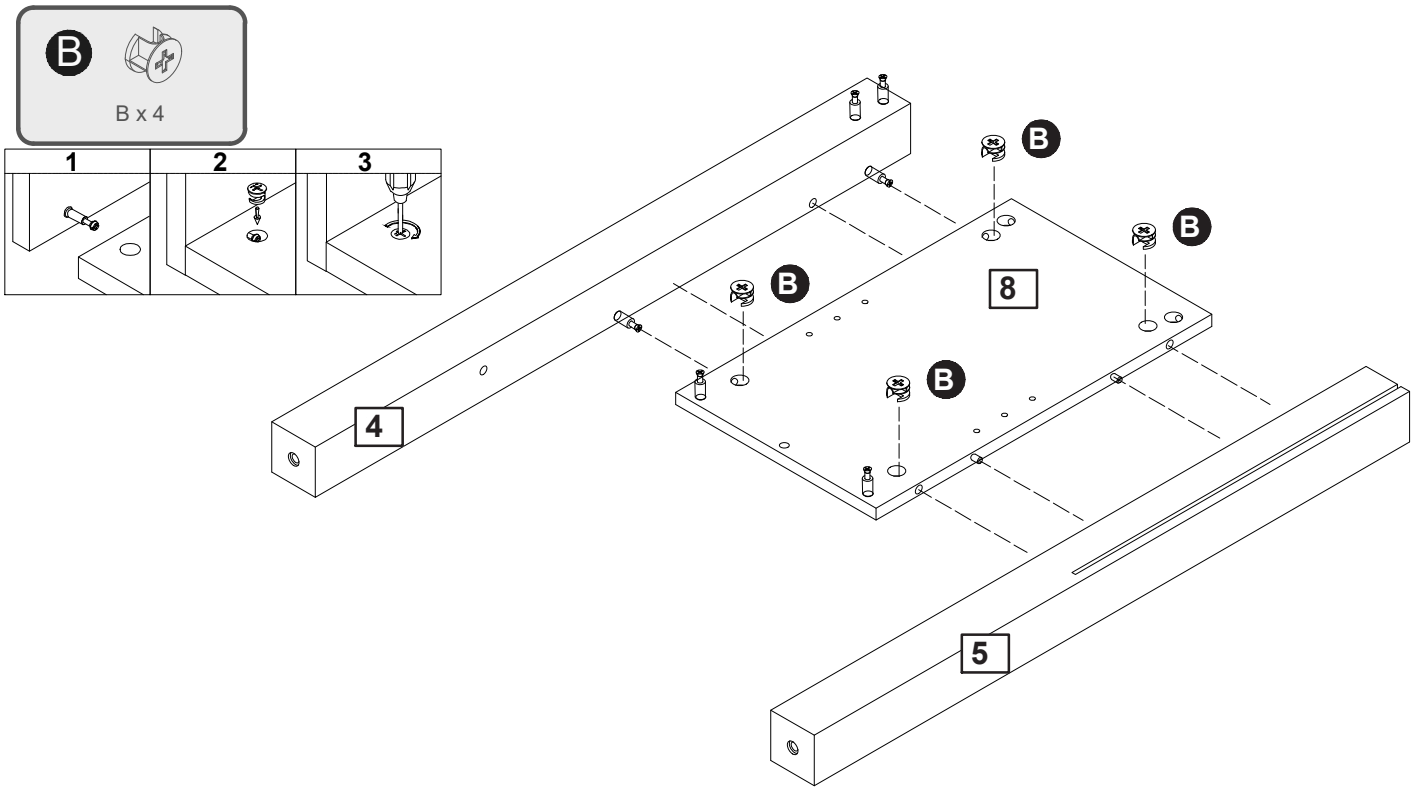

Assembly Instructions

Step 7

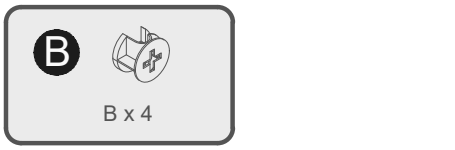

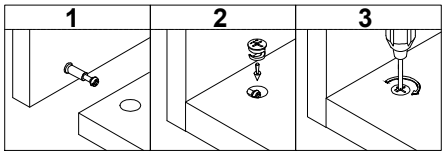

Step 8



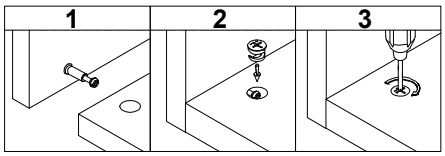

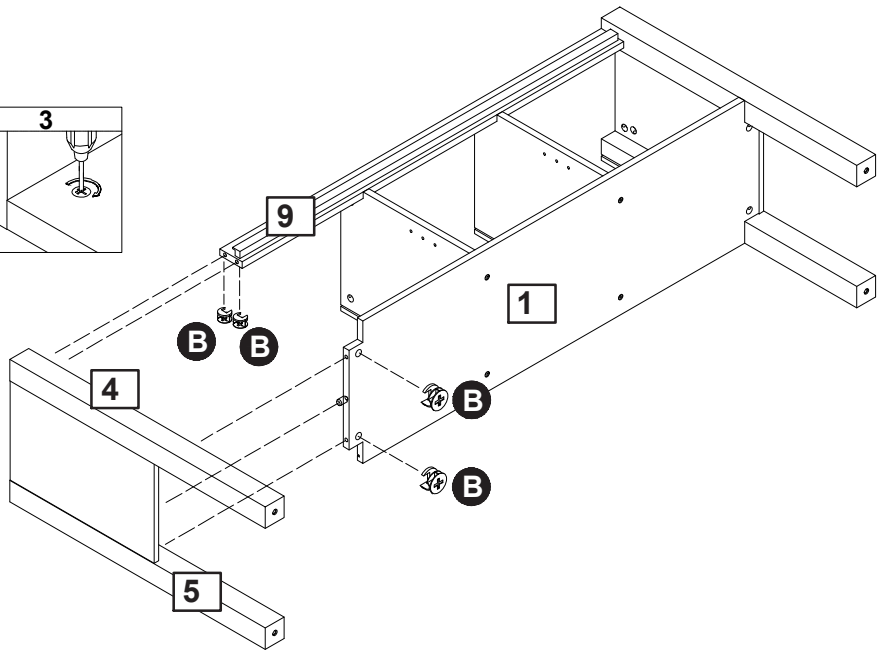

Assembly Instructions

Step 9

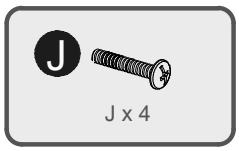

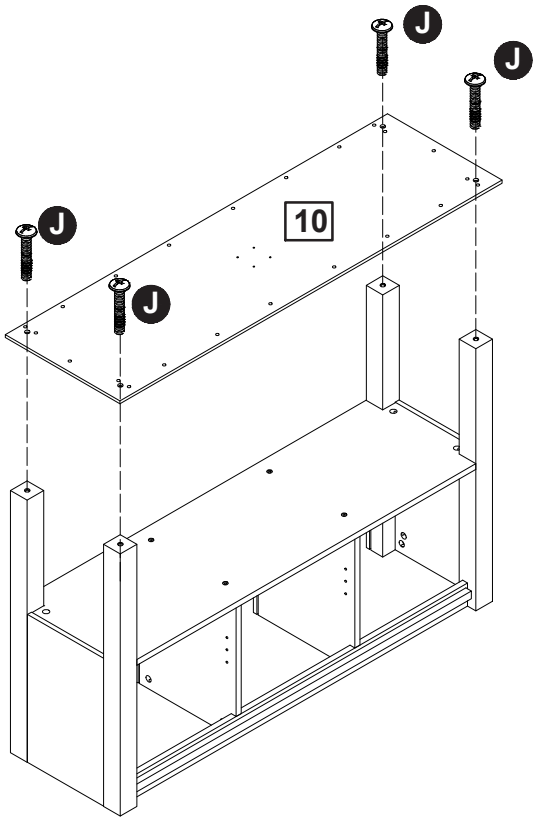

Step 10

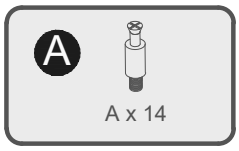

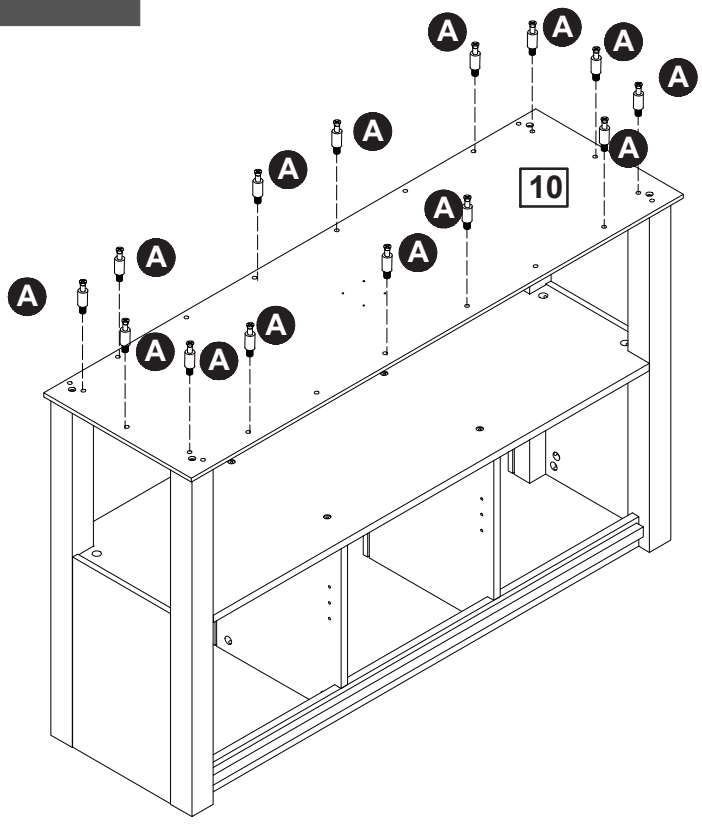

Assembly Instructions

Step 11

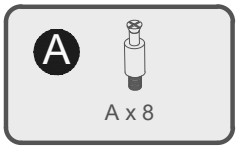

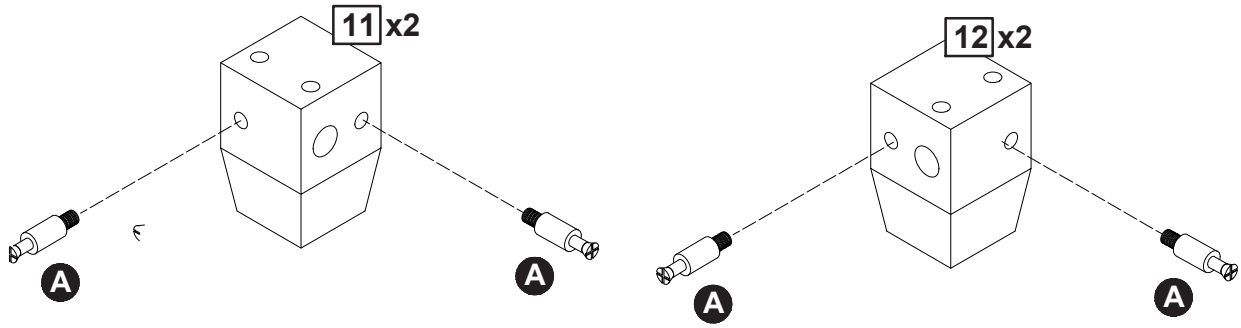

Step 12

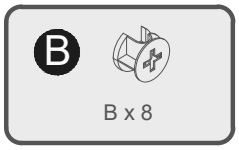

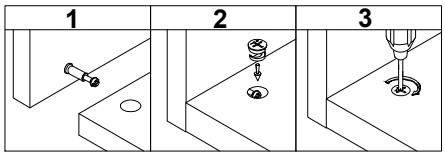

Assembly Instructions

Step 13

C x 8

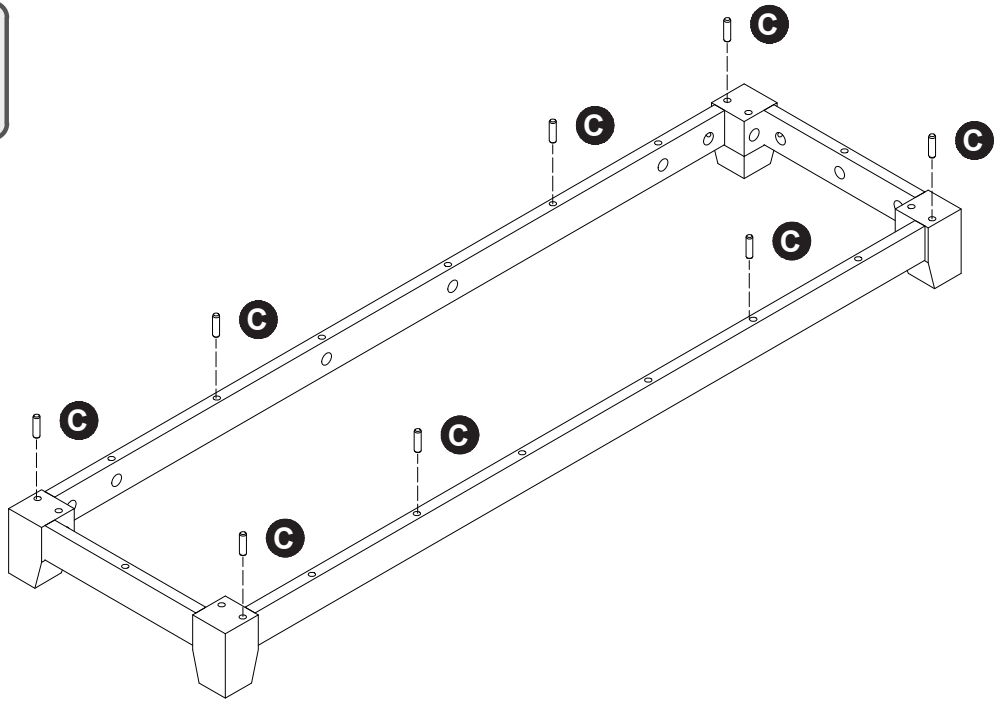

Step 14

B x 14

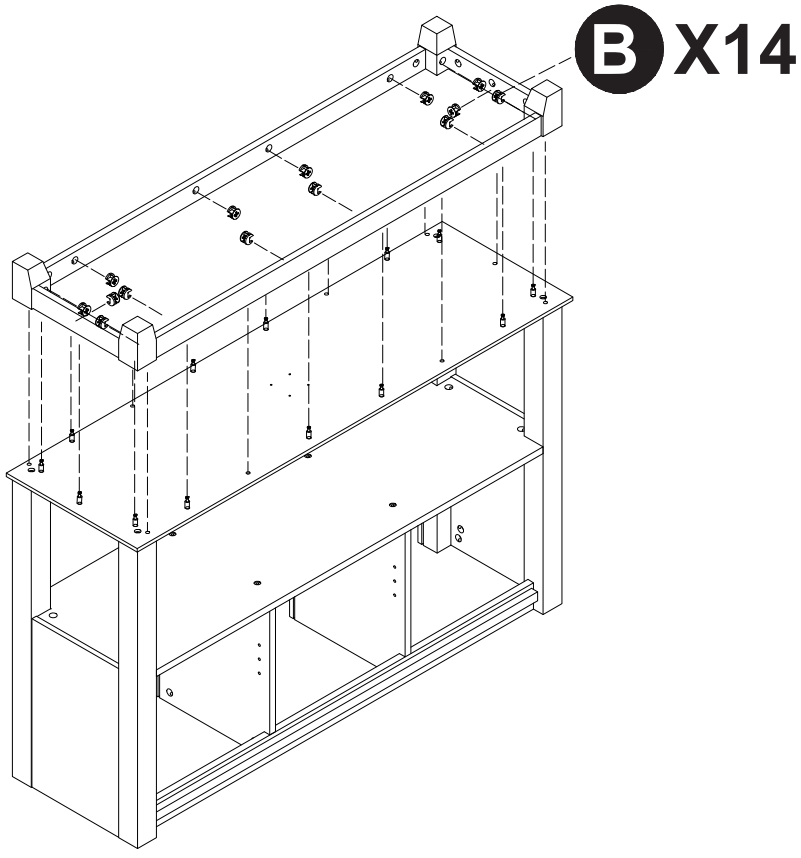

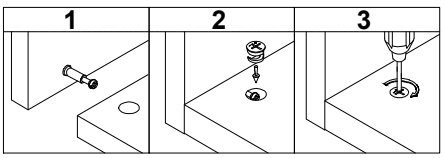

Assembly Instructions

Step 15

H x 1

D x 4

I x 4

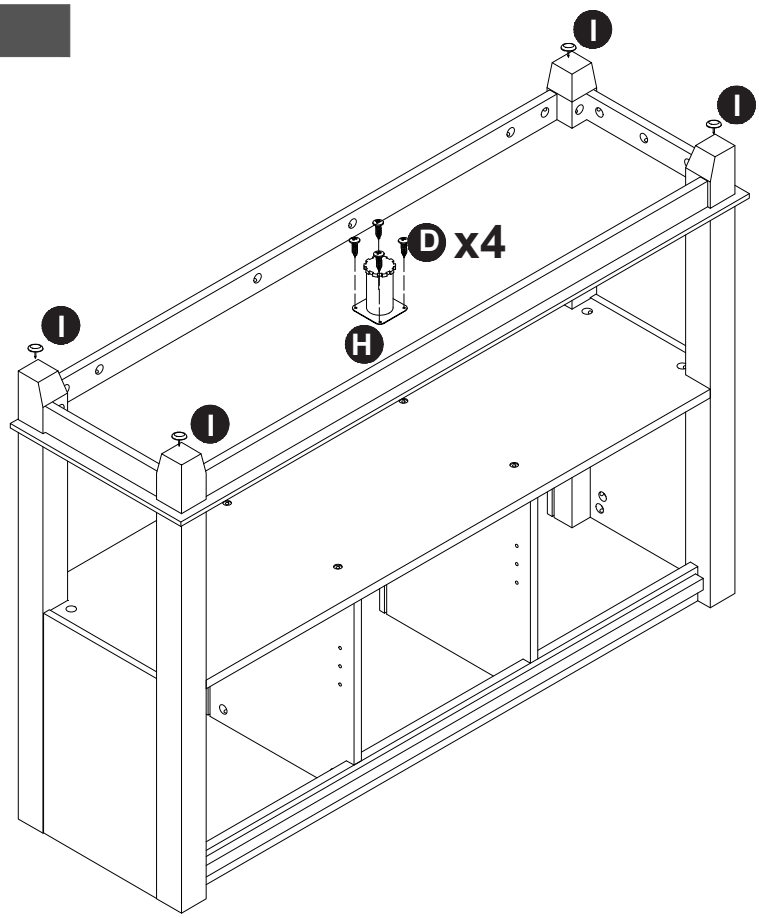

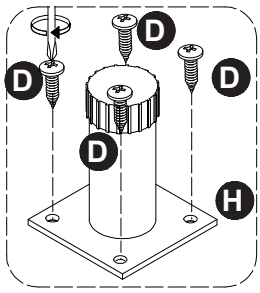

Step 16

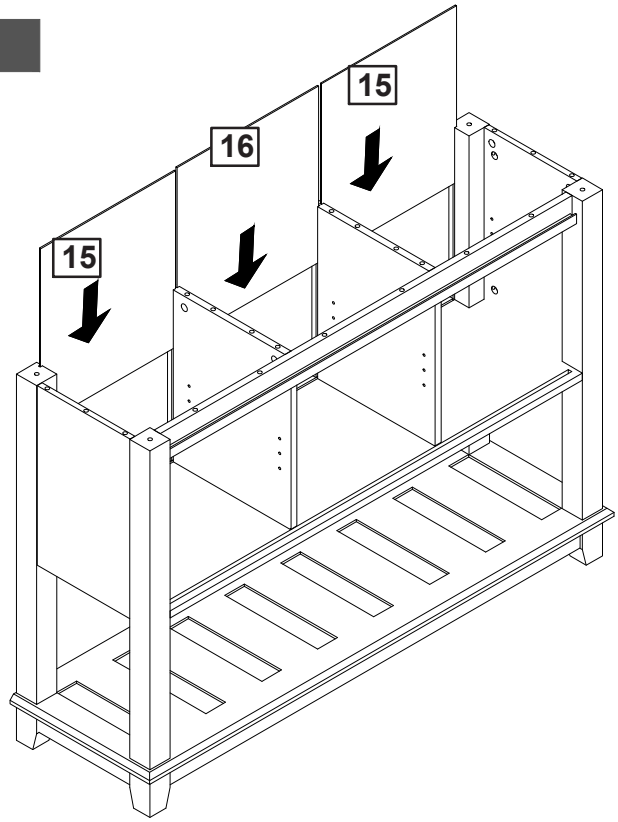

Assembly Instructions

Step 17

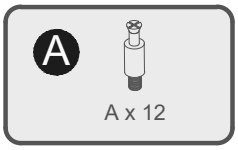

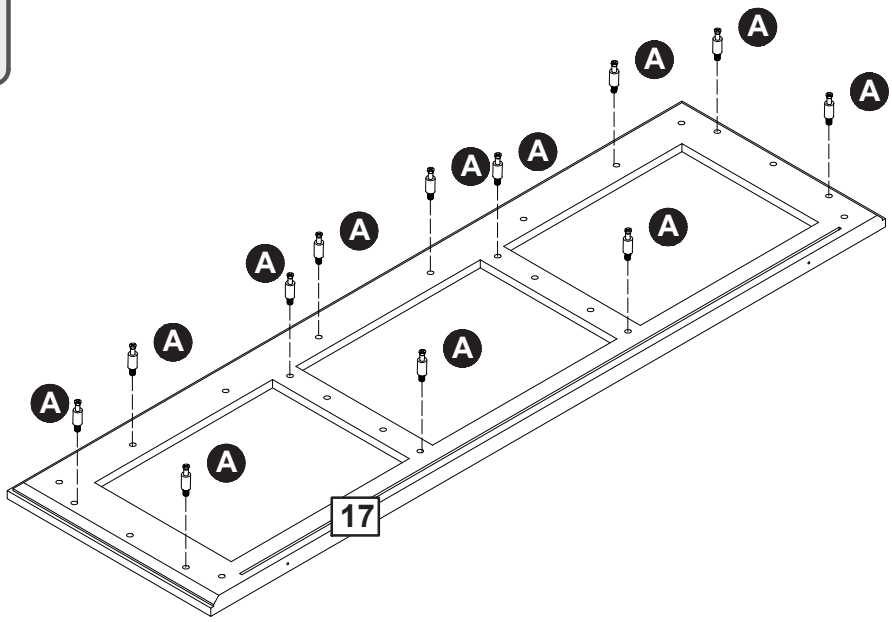

Step 18



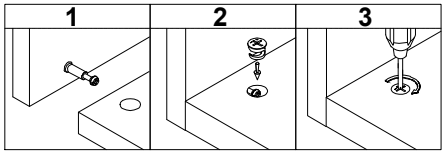

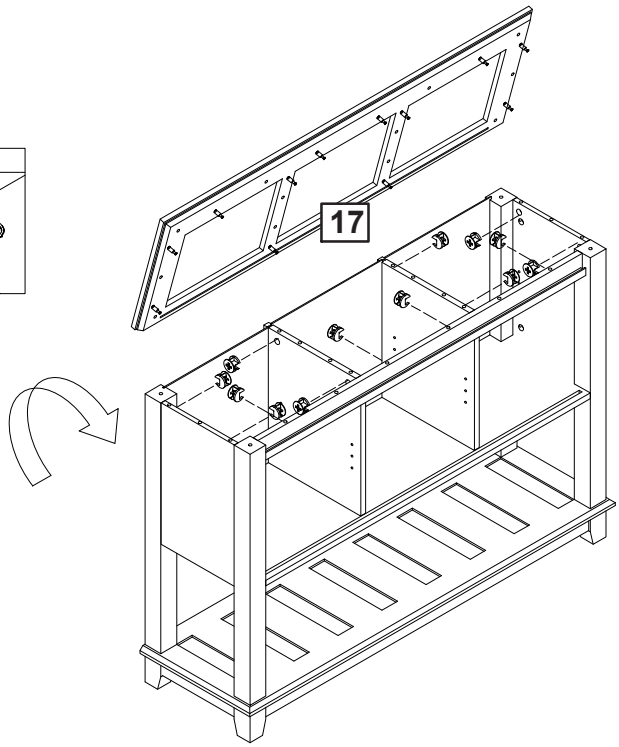

B X12

Assembly Instructions

Step 19

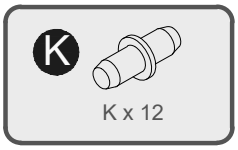

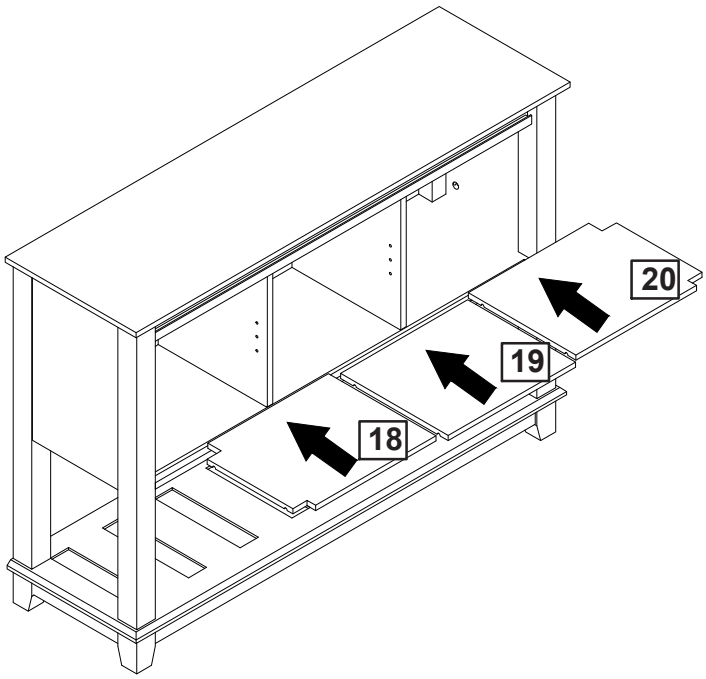

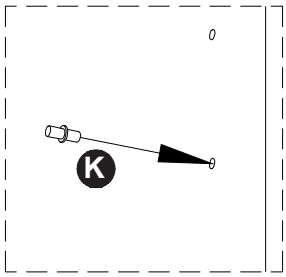

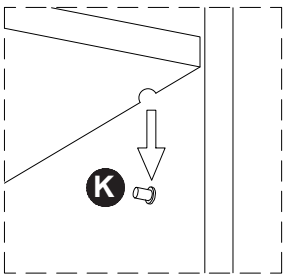

Step 20

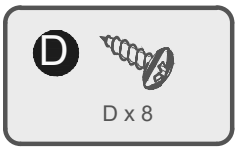

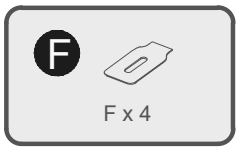

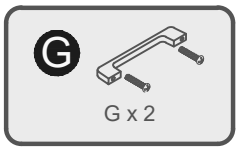

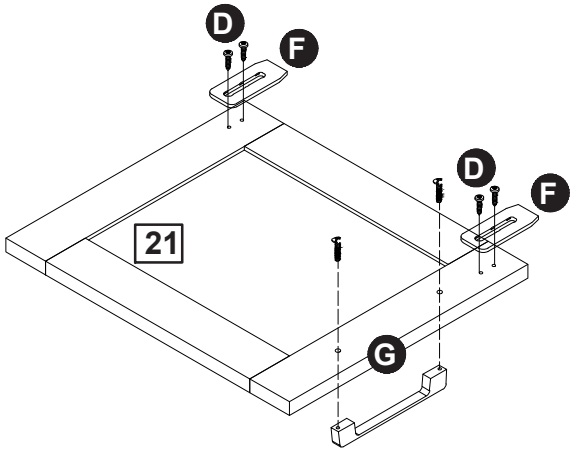

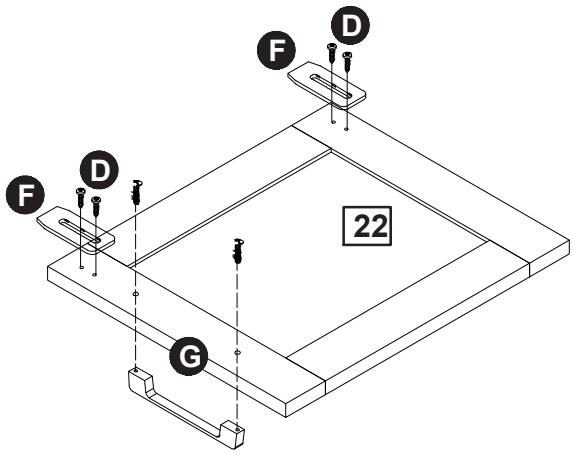

Assembly Instructions

Step 21

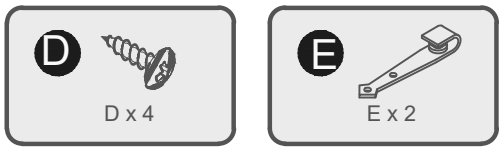

Step 22



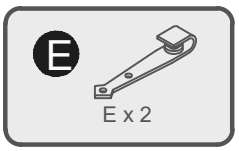

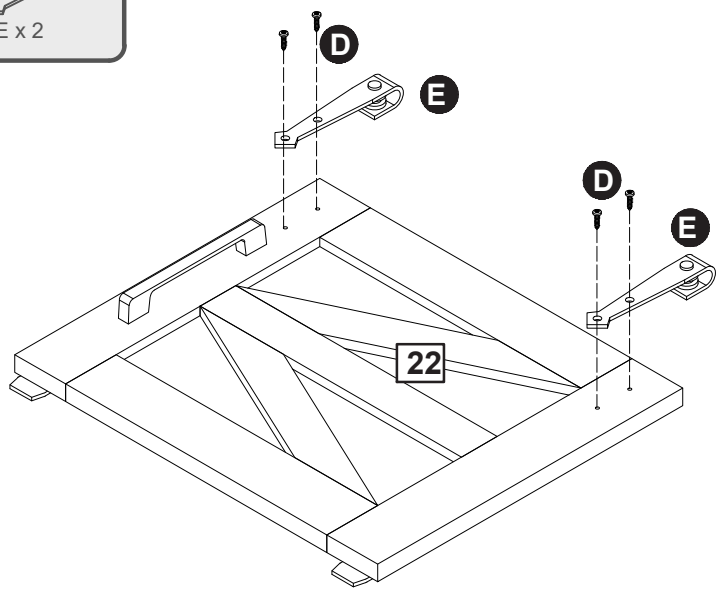

Assembly Instructions

Step 23

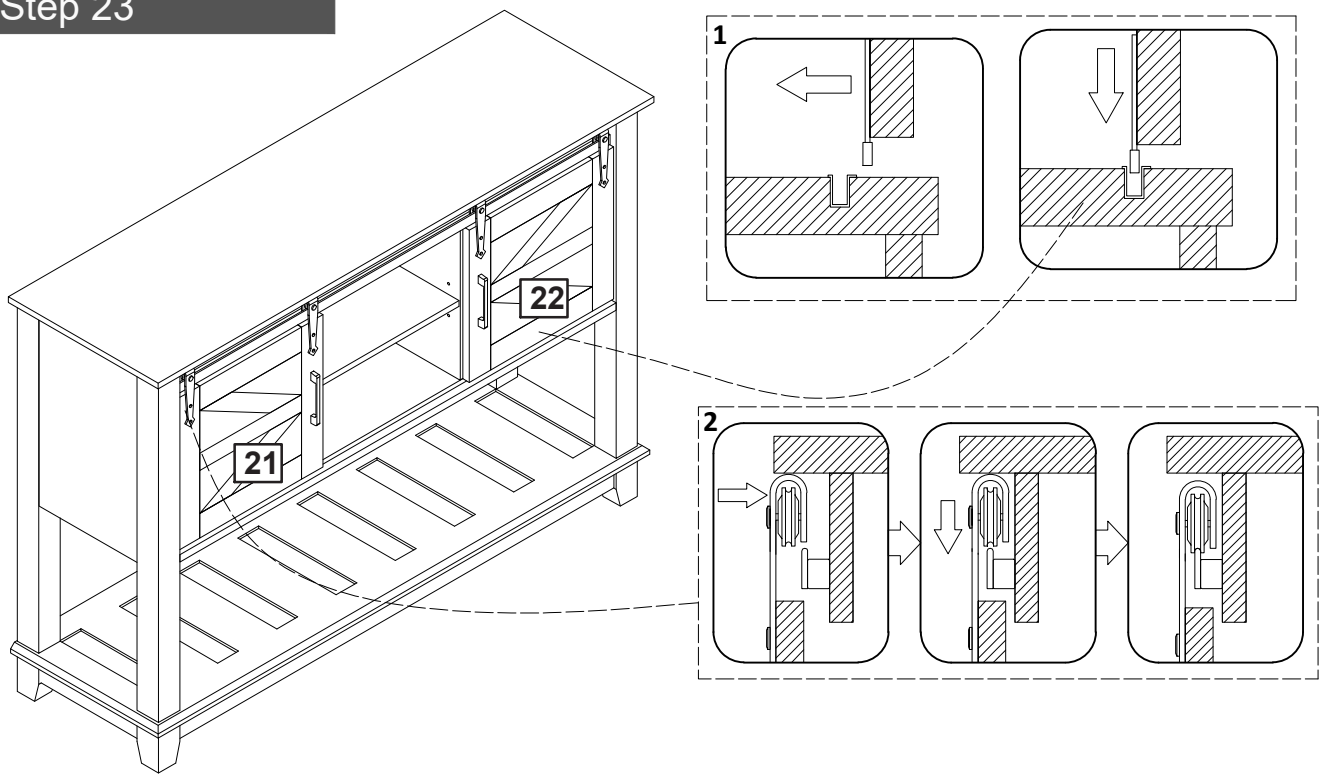

Attach bottom of doors to the sliding slot then close the doors to the sliding track. Slightly uplift the doors and hook pulley to the sliding track.

Step 24

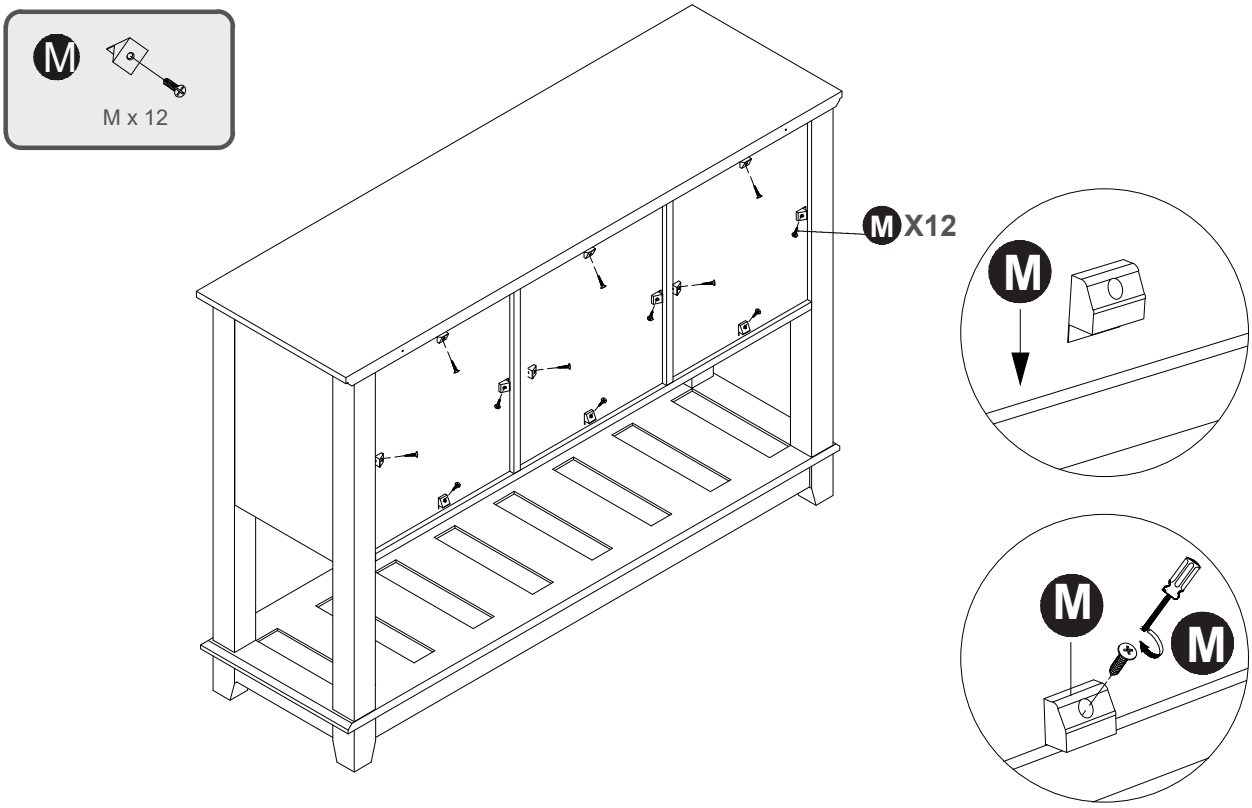

Assembly Instructions

Step 25



DANGER - To prevent furniture from toppling,
please secure it to walls and floors.
Do not put heavy items on top shelves.
Do not place unstable furniture near where children play.
An anchor kit suitable for plaster walls is included with this item, if you require a different kit, please consult your local hardware store.

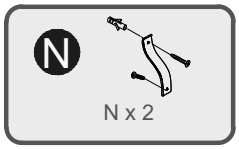

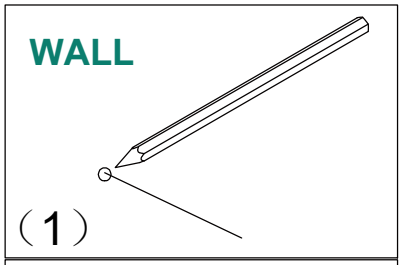

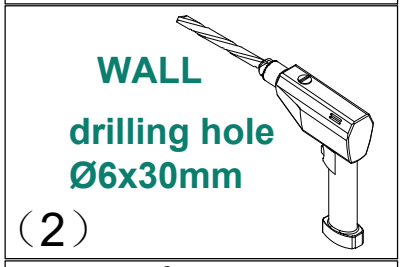

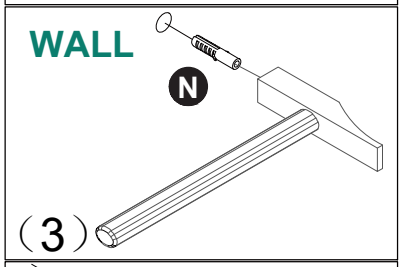

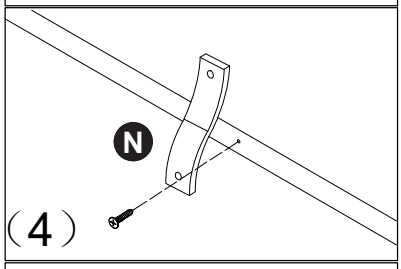

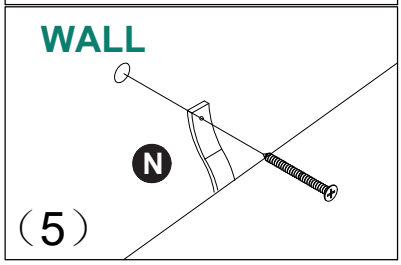

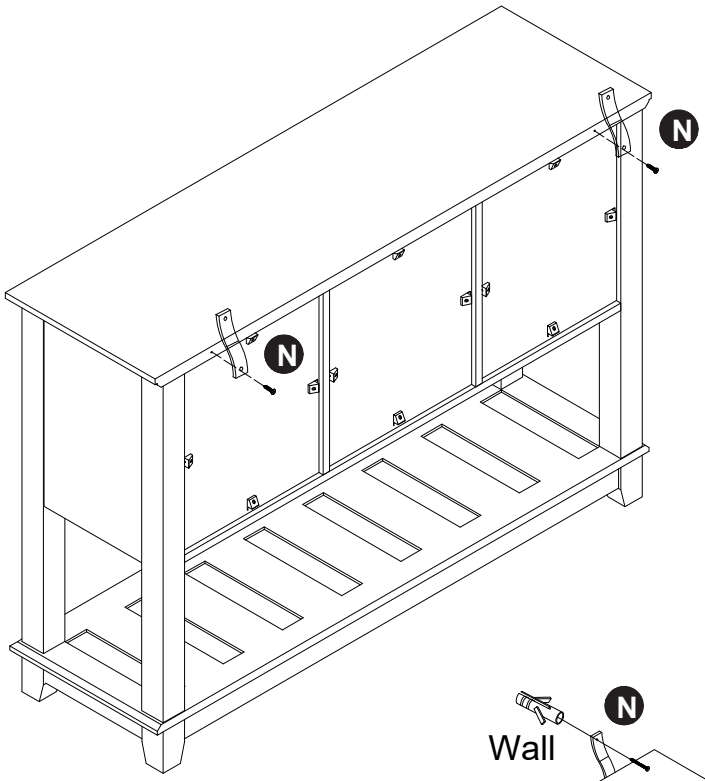

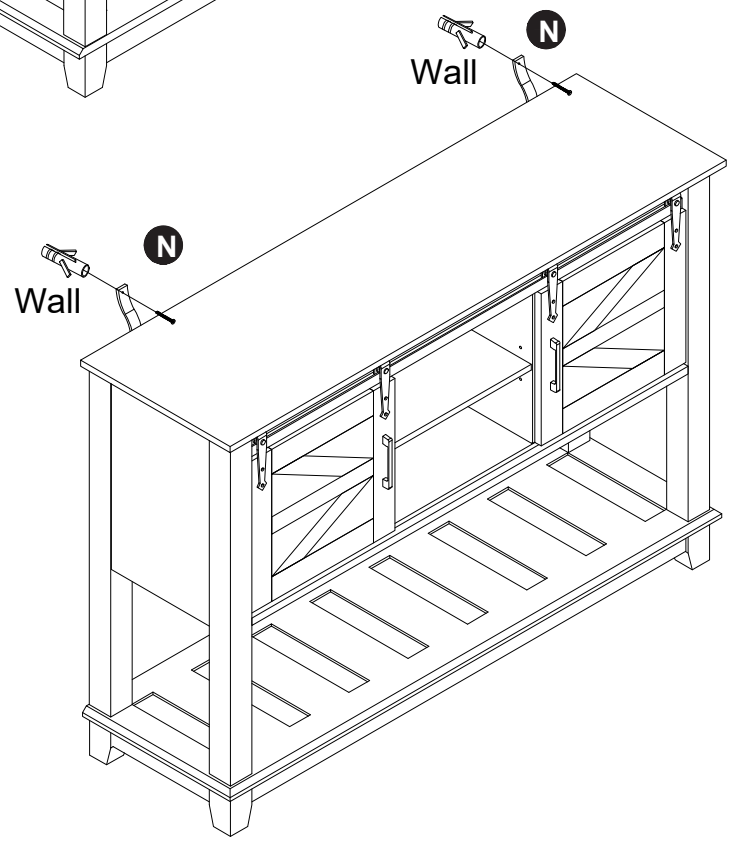

Assembly is complete.

A Guide to Wall Mounting & Fixings

Important note:

If plastic wall plugs (rawl plugs) are supplied with your product, e.g.:



- these are only suitable for use in masonry walls.

If you are in any doubt about the correct wall plugs for your wall, seek professional advice.

Failure of the product due to using the incorrect fixings is the responsibility of the installer.

Important: when drilling into walls always check that there are no hidden wires or pipes etc.

Make sure that the screws and wall plugs being used are suitable for **supporting your unit. Consult a qualified tradesperson if you** are unsure.

Hints:

1: General rule: always use a larger screw and wall plug if you are not sure.
2: Ensure you use the recommended drill bit to match the wall plug and hole size.
3: Ensure you drill the hole horizontally; do not force the drill or enlarge the hole.
4: Take extra care when drilling high walls, ceilings and ceramic tiles. Ensure wall plugs are inserted beyond the thickness of the ceramic tiles to avoid the tiles splitting or cracking.
5: Ensure wall plugs are well fitted and are a tight fit in the drilled hole.

Types of walls

You can use one of the following types of wall plug if your walls are made of brick, breeze block, concrete, stone or wood.

No.1 “General Purpose” wall plug

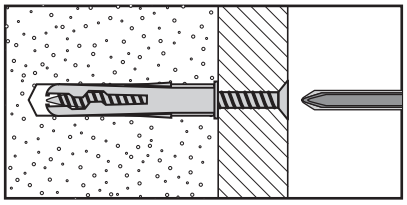

Generally aerated blocks should not be used to support heavy loads, use a specialist fitting in this case. For light loads, general purpose wall plugs can be used.

No.3 “Cavity Fixing” wall plug

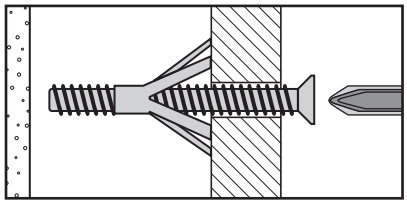

For use with plasterboard partitions or hollow wooden doors.

No.5 “Hammer Fixing” wall plug

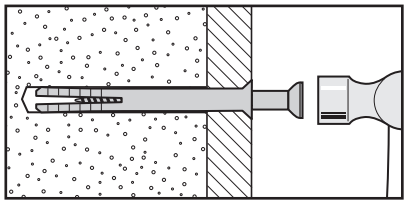

For use with walls stuck with plasterboard. The hammer fixing allows it to be fixed to the wall rather than the plasterboard. Always check the fixing is secure to the retaining wall.

No.2 “ Plasterboard” wall plug

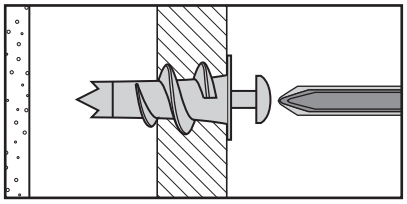

For use when attaching light loads onto plasterboard partitions.

No.4 “ Cavity Fixing – Heavy Duty” wall plug

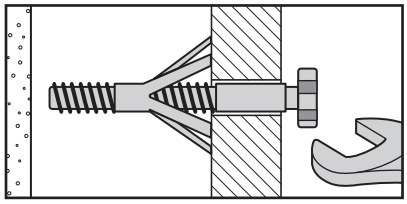

For use when fitting or supporting heavy loads such as shelving, wall cabinets and coat racks.

No.6 “ Shield Anchor” wall plug – heavy loads

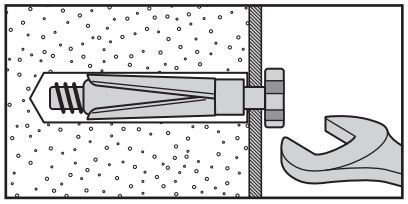

For use with heavier loads such as TV and HiFi speakers and satellite dishes etc.

Care & Maintenance

Safety: always check the fitting and location to ensure your safety in and around the home.

Fitting: from time to time check the fitting to ensure the wall plugs or screws do not become loose.