ASSEMBLY INSTRUCTION
OUTDOOR SUNBED

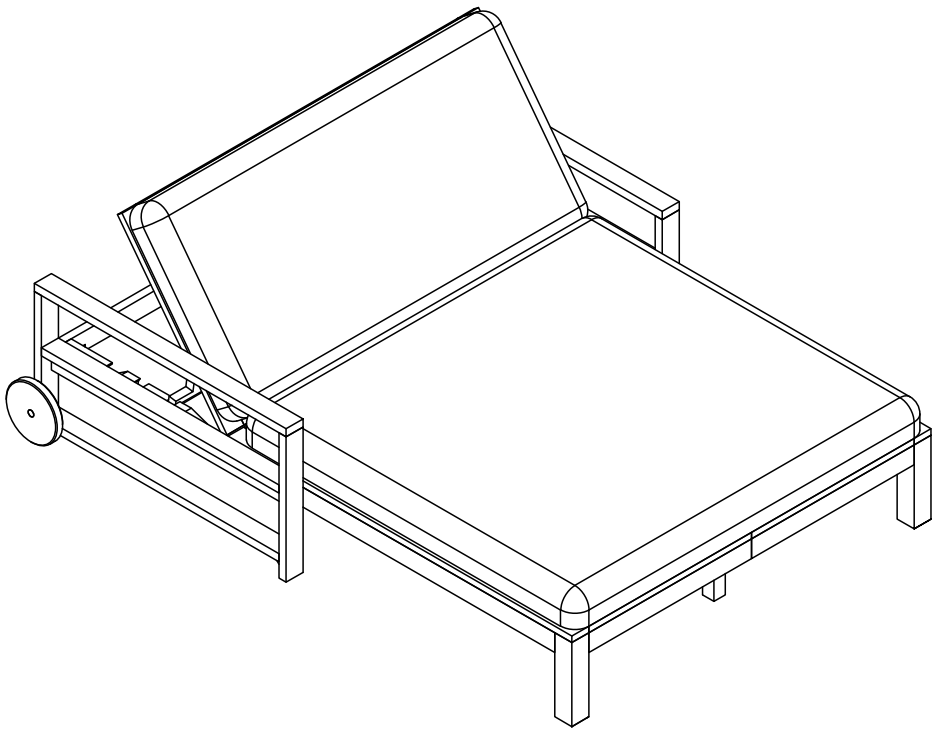

WF320448; WF320449; WF320450

Notice

1. **50% Tighten before fixings all screws, Allen wrench is recommended instead of an electric drill.**
2. **Place the item on a flat ground to adjust and make sure it remains stable.**
3. **Tighten up all screws with tools gradually.**
4. **If the screws are not aligned with holes during assembly, please loosen all all the other screws to 50% and continue the assembly process.**
5. **If the item is not stable, please loosen all the screws, adjust it on a flat ground and tighten up all screws again.**
6. **Note: If one or more screws are fully tightened during assembly, chances are the others will not be aligned with holes. In addition, all the holes are disigned to be relatively larger to provide more space for the adjustment of the screws.**

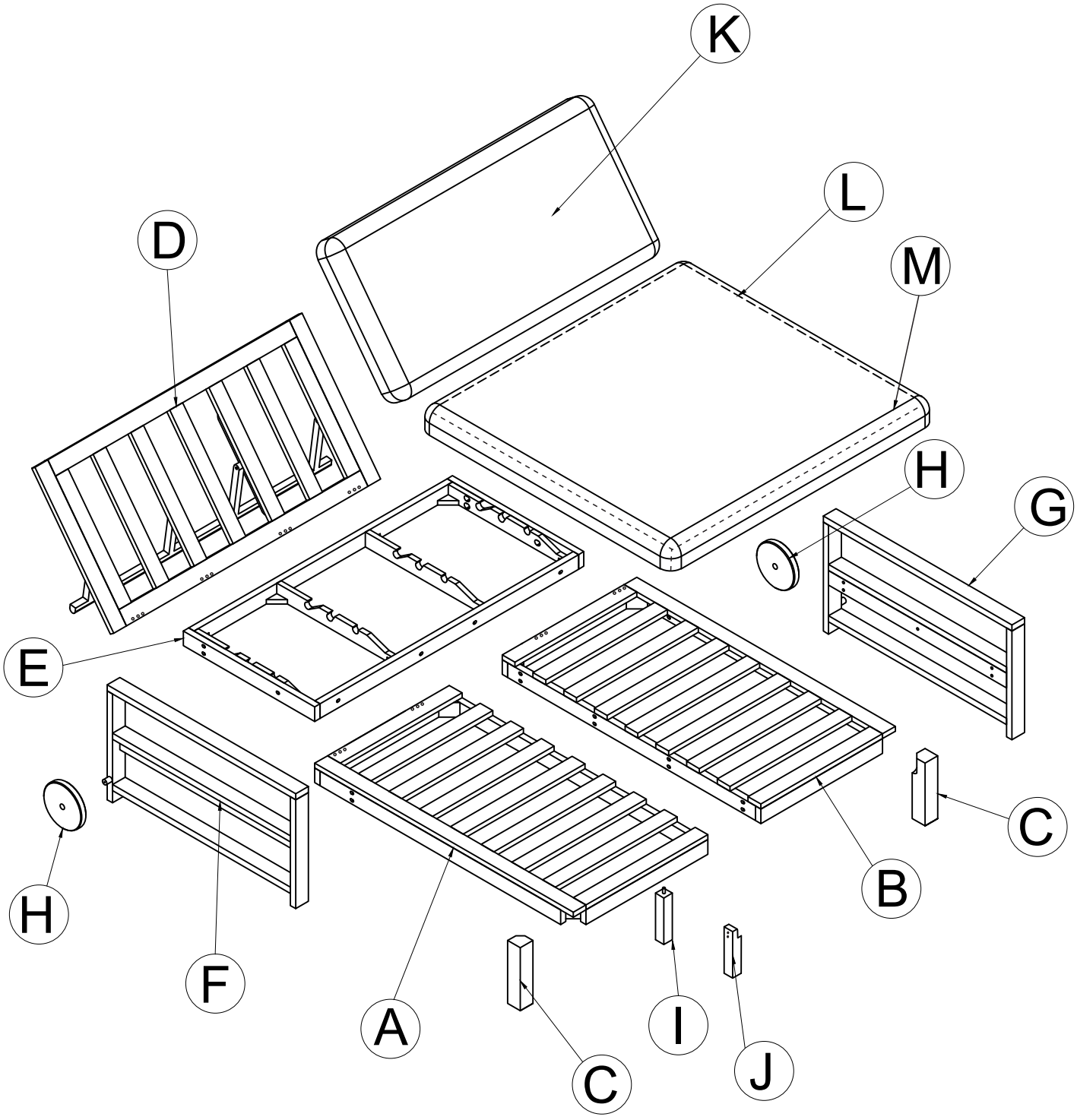
K
L
M
D
H
G
E
C
B
H
F
A
I
J
C

A 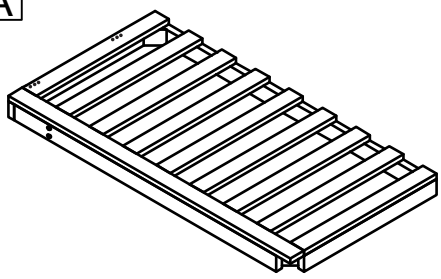 1 pc	B 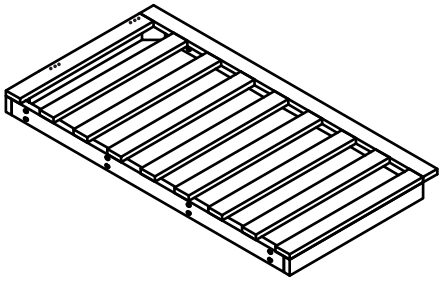 1 pc	C  2 pcs
D 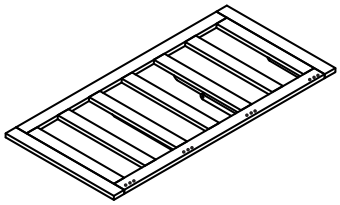 1 pc	E 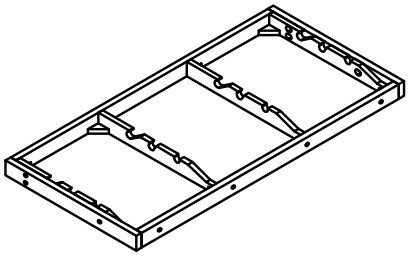 1 pc	F 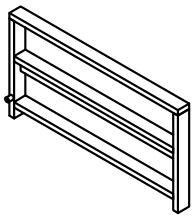 1 pc
G 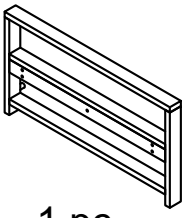 1 pc	H 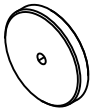 2 pcs	I  1 pc
J  1 pc	K 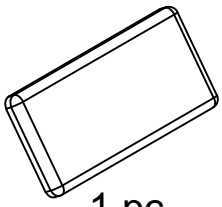 1 pc	L 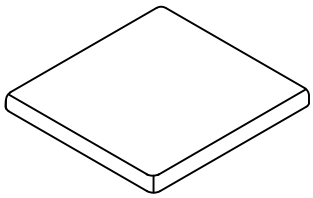 1 pc
M 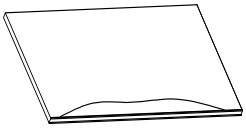 1 pc	1 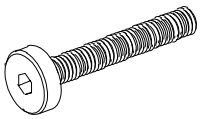 **Bolt M6x45 mm (26 pcs)+extra (1 pc)**	2  **Lock Washer M8/13x2 mm (16 pcs)+extra (1 pc)**
3 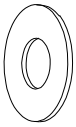 **Steel Washer M6/20x2 mm (20 pcs)+extra (1 pc)**	4 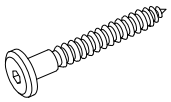 **Screw M6x30 mm (4 pcs)+extra (1 pc)**	5 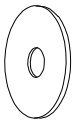 **Steel Washer M6/40x2 mm (2 pcs)+extra (1 pc)**
6 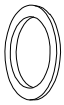 **Steel Washer M26/40x2 mm (2 pcs)+extra (1 pc)**	7 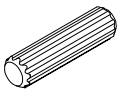 **Wooden Dowels (2 pcs)+extra (1 pc)**	8 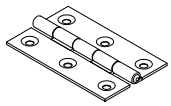 **Hinges (4 pcs)+extra (1 pc)**
9  **Screw M4x15 mm (24 pcs)+extra (1 pc)**	10 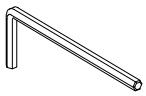 **Allen Wrench 2 pcs**	11 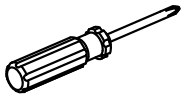 **Screwdriver (Not provided)**

WF320448

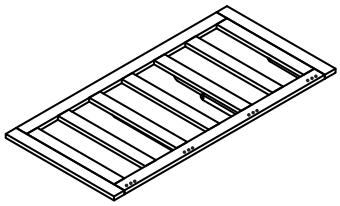

D x1

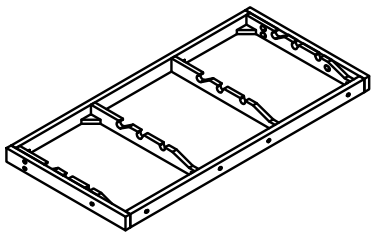

E x1

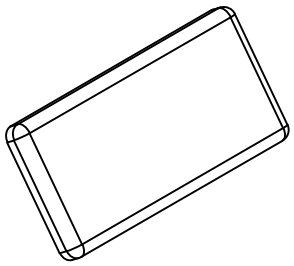

K x1

WF320449

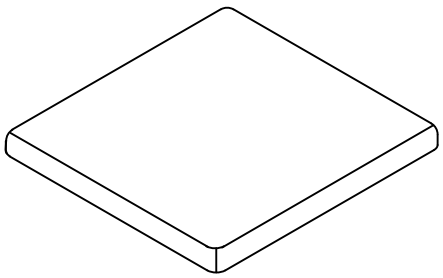

L x1

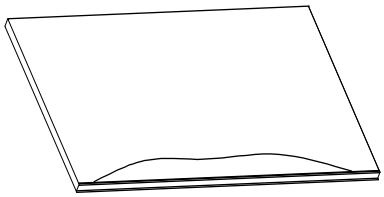

M x1

WF320450

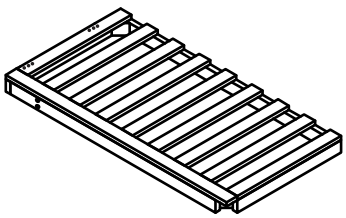

A x1

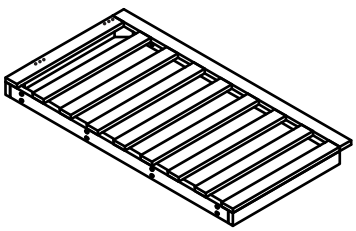

B x1



C x2

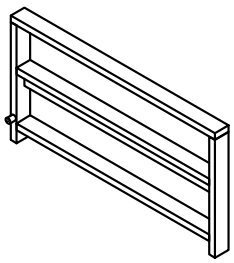

F x1

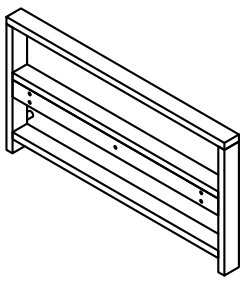

G x1

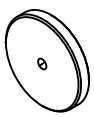

H x2



I x1



J x1

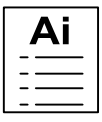



Step 1

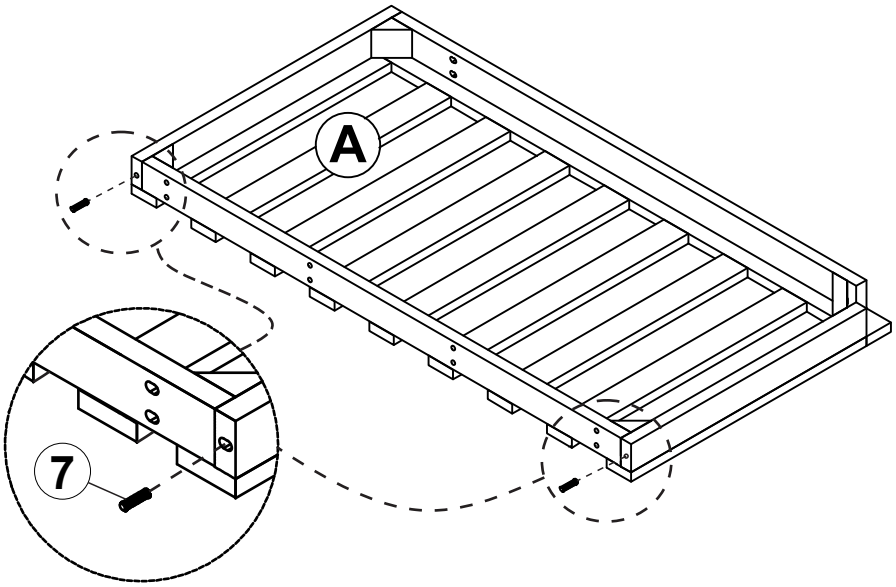

⑦x2

Step 2

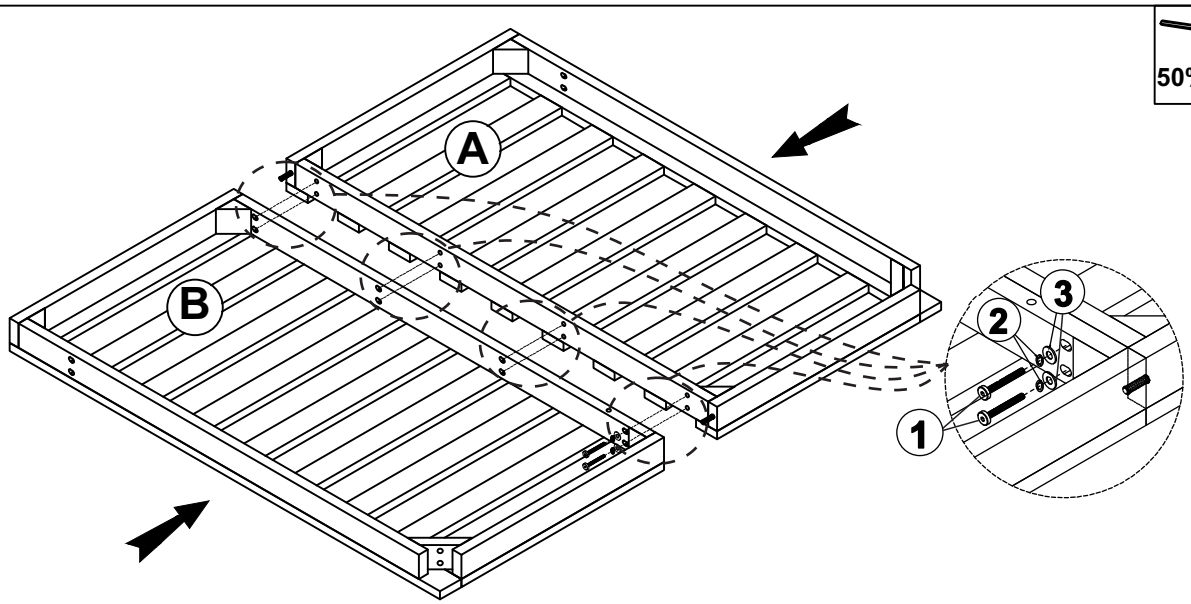

①x8 ②x8 ③x8

Step 3

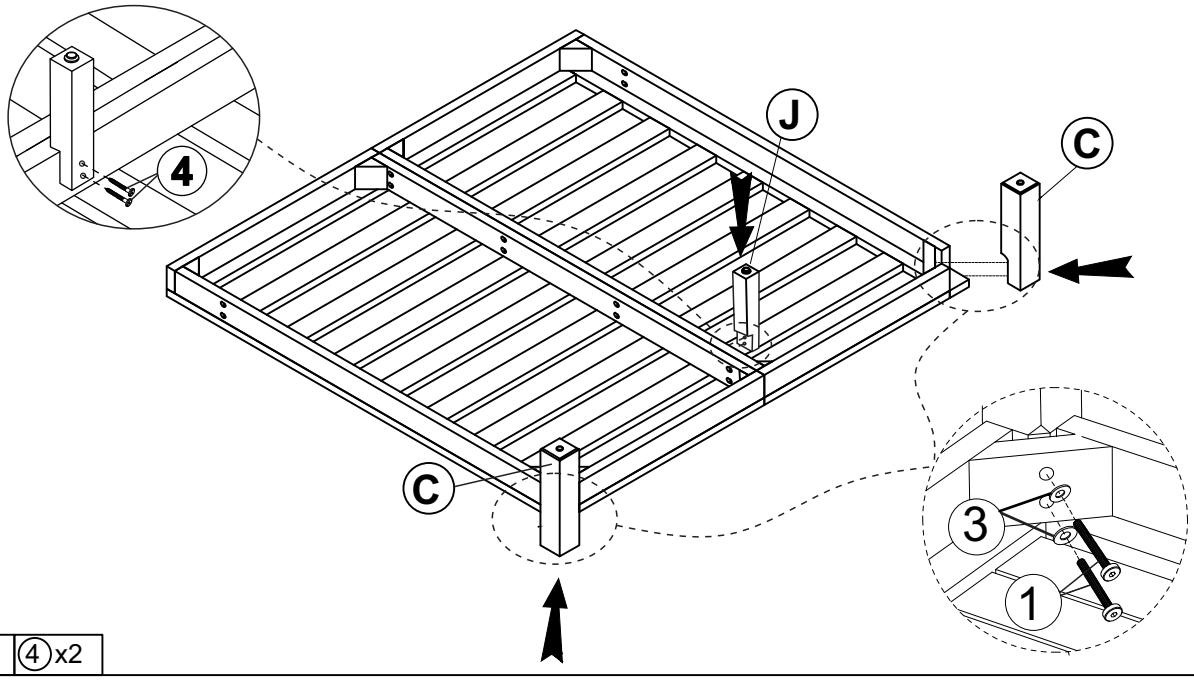

①x4 ③x4 ④x2

Step 4

50%

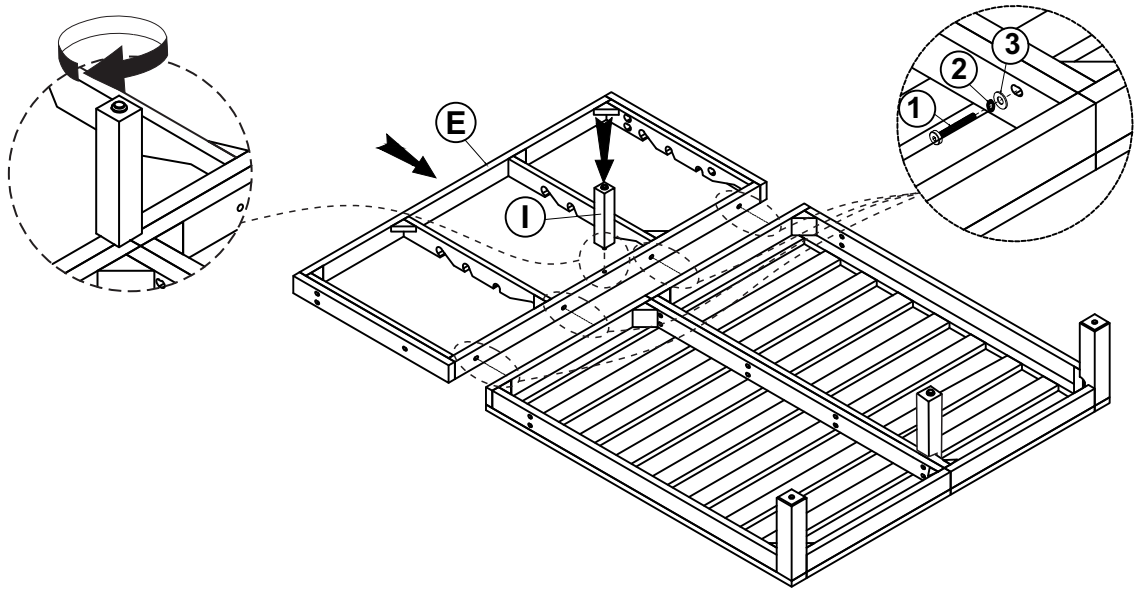

① x4	② x4	③ x4

Step 5

50%

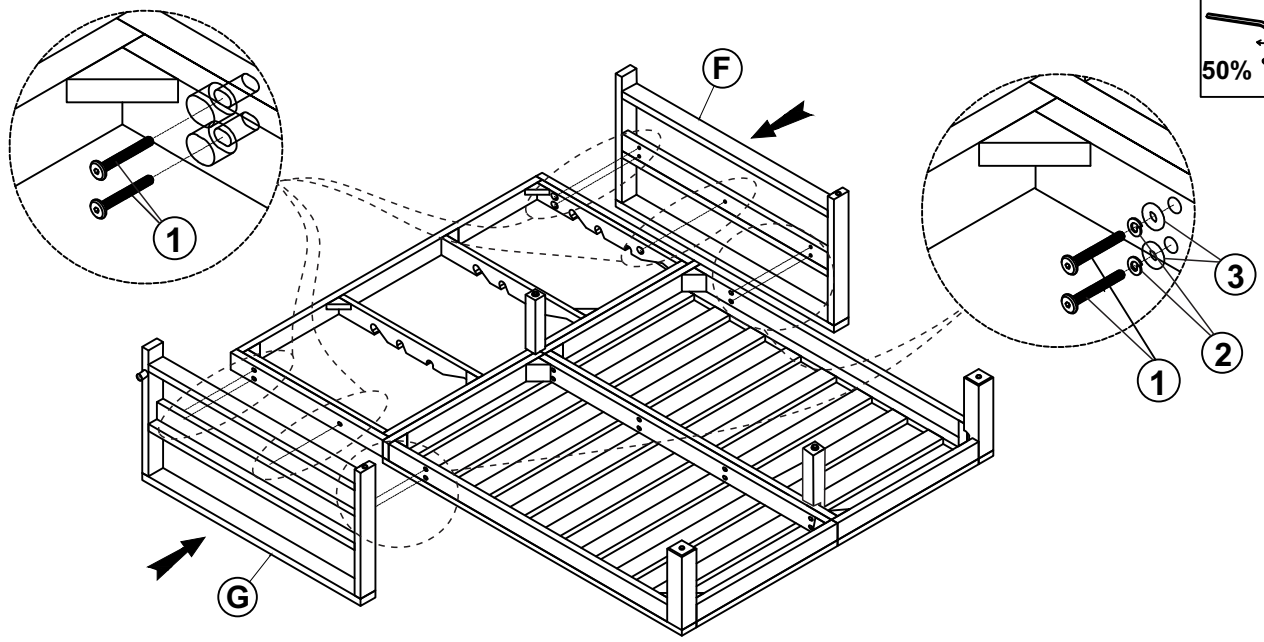

① x10	② x4	③ x4

Step 6

100%

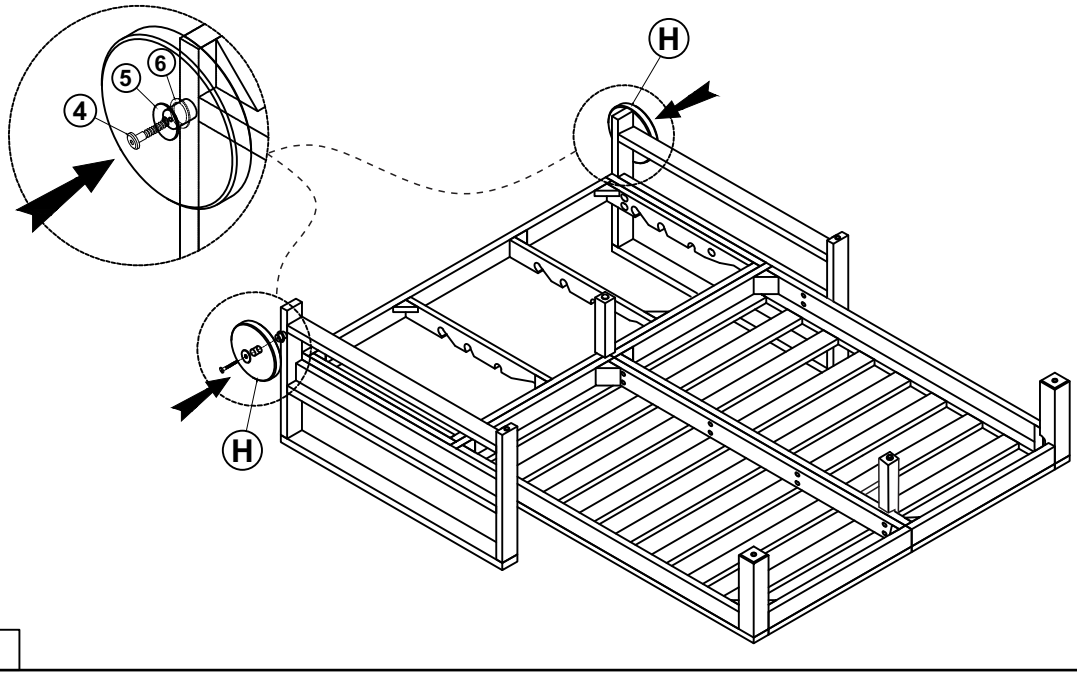

④ x2	⑤ x2	⑥ x2

Step 7

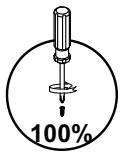

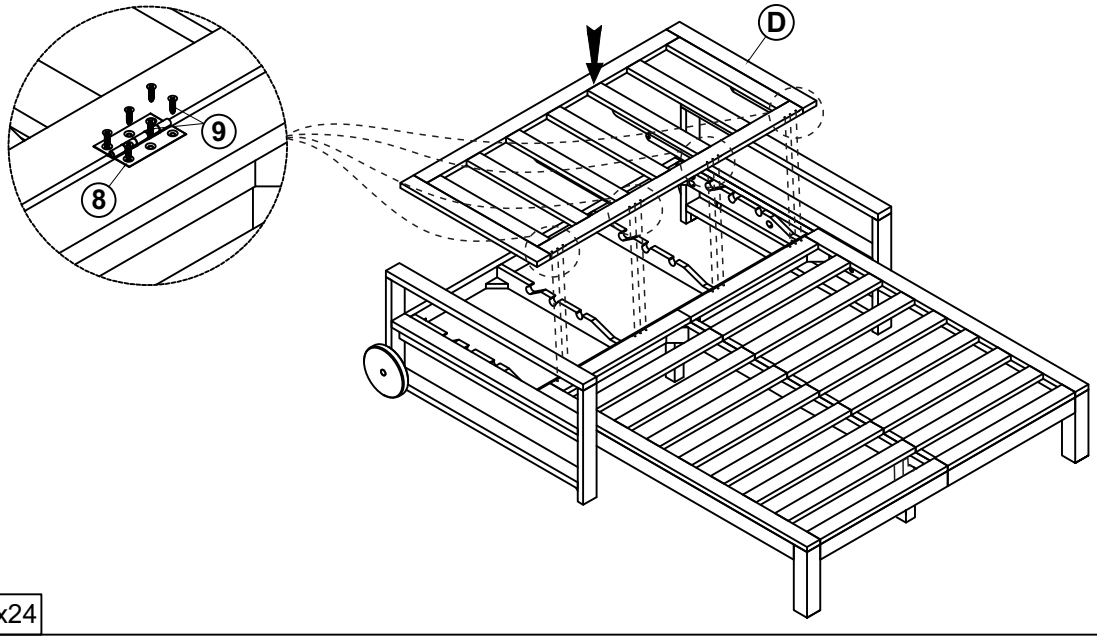

⑧x4 | ⑨x24

Step 8

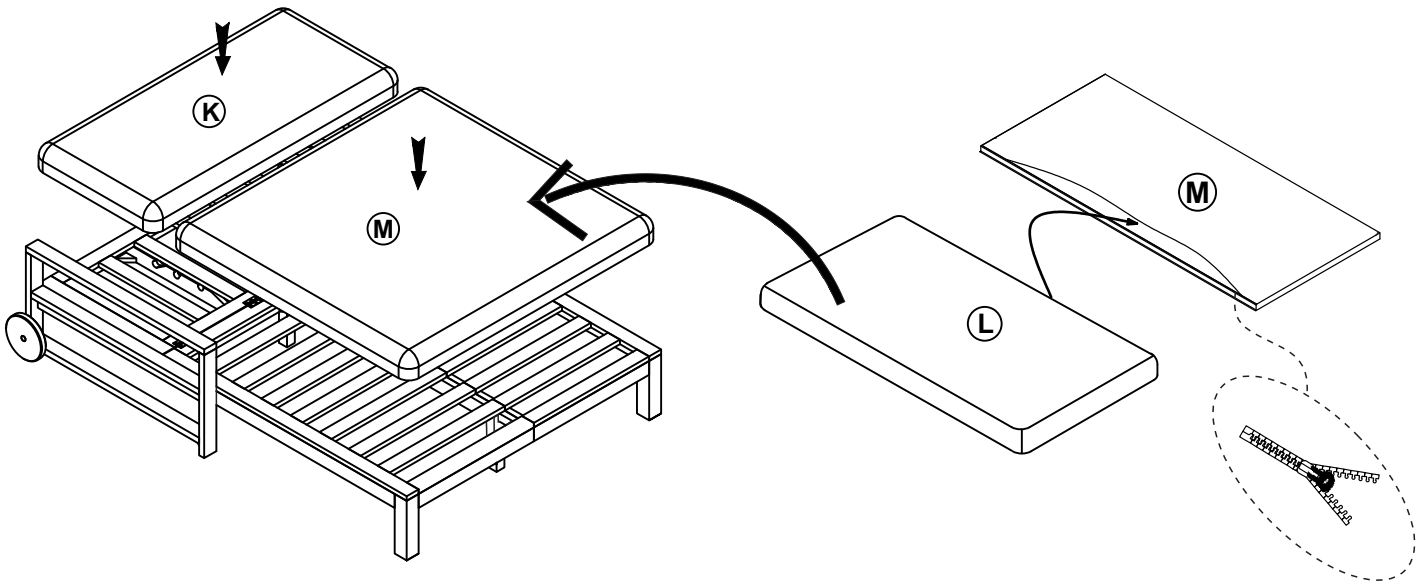

Step 9

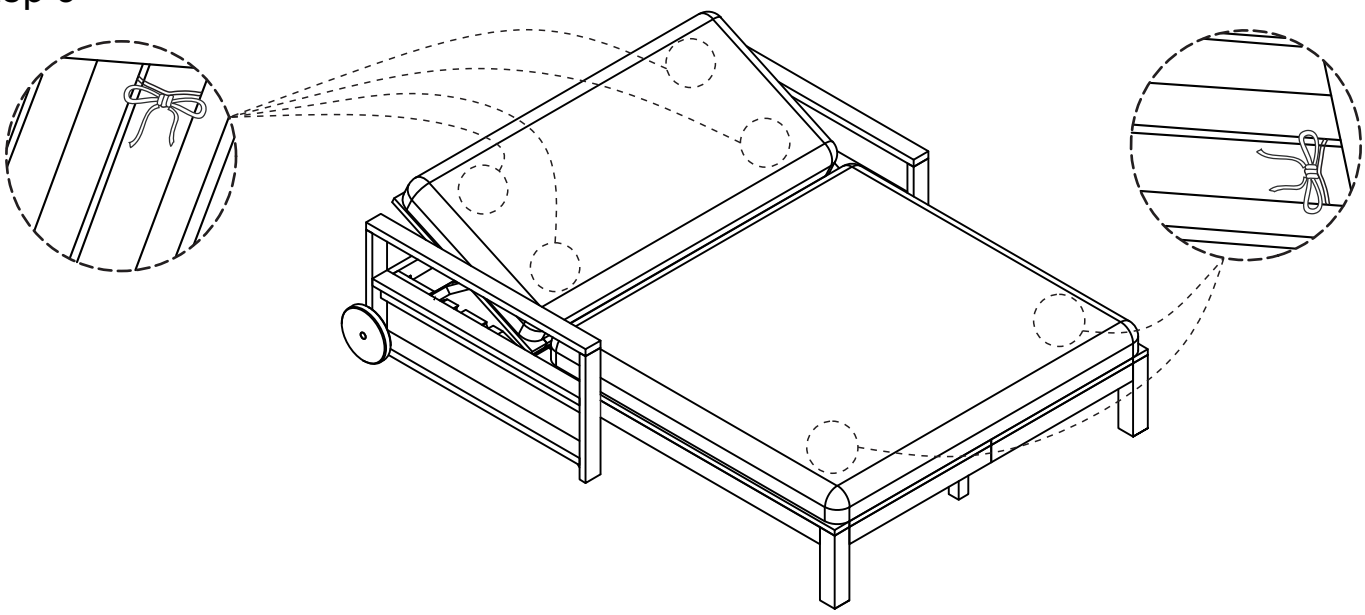

Step 10

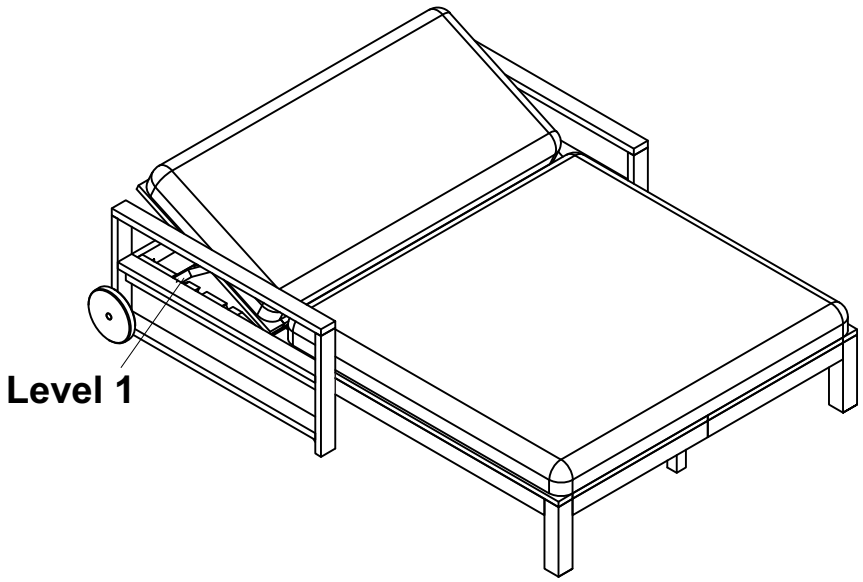

Step 11

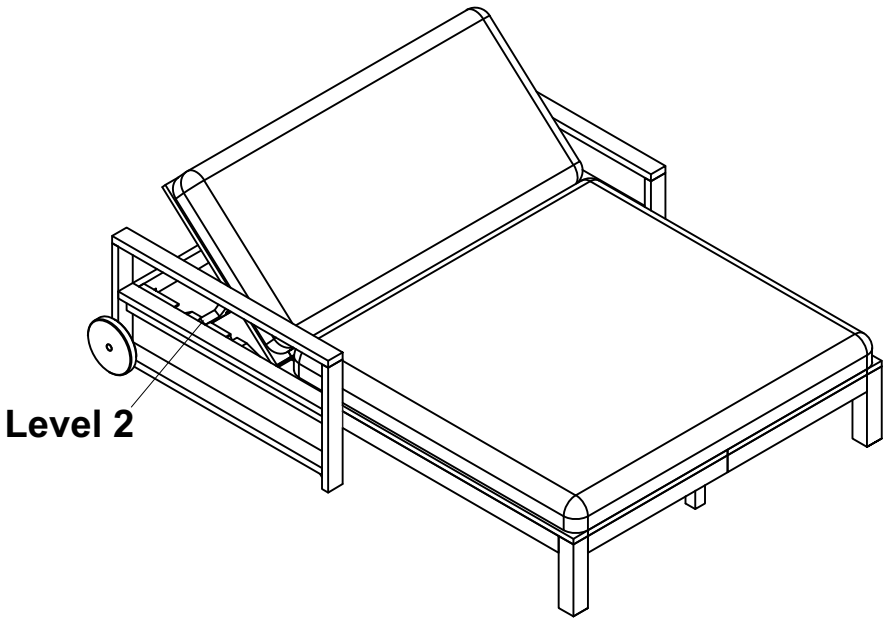

Step 12

