Product Material : Rubber Wood / Particleboard / MDF / LVL
Product Dimension : L89.2" x W62.4" x 43.3"H
Weight Limit : 500lbs

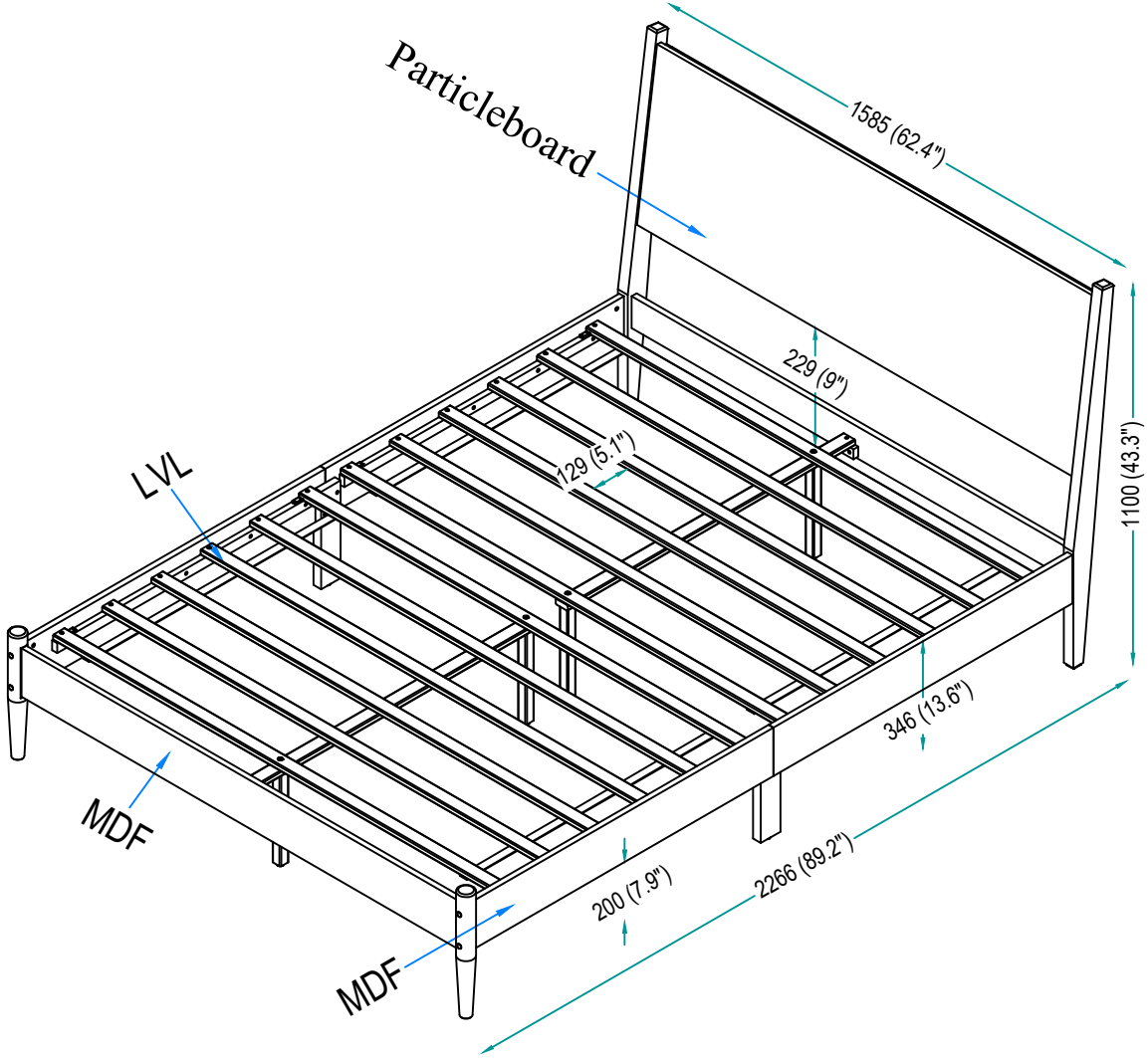

MT33005