TV Stand

Assembly Instruction – Please keep properly for future reference.

If you find any missing boxes, damaged parts, or accessory shortages, please contact the customer service team of your purchasing channel immediately. We will resolve the issue as quickly as possible.

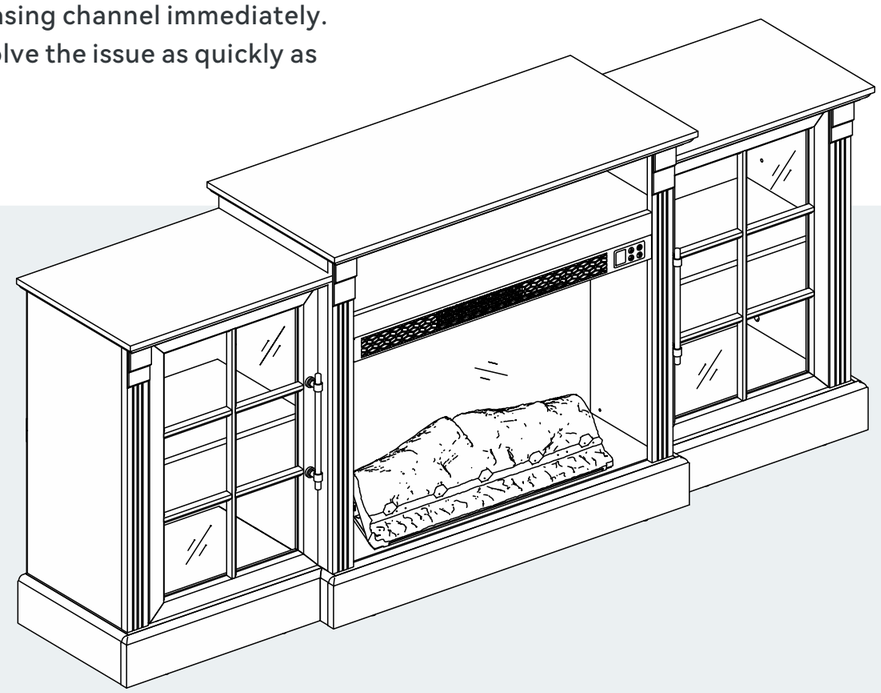

SKU:
C001050011
C001050012
C001050021
C001050022
C001050031
C001050032
C001050041
C001050042

V1.0

EN

CONTACT US

- **Email: service@grandtunnel.com**
  In order to receive assistance more quickly, please provide

THE FOLLOWING INFORMATION:

- Order number
- Purchase platform
- Purchase date
- Detailed description of the issue along with photos (if applicable)

Important – Please read these instructions carefully before starting the installation.

TV Stand

Before Assembly

Thank you for choosing our product!
To ensure a smooth installation process, please read this guide carefully to familiarize yourself with the required tools, materials, and installation steps.
Follow the relevant sections to avoid any damage caused by improper installation, and make sure to review all operation and safety guidelines for correct installation procedures.

Packaging Notice:

1. Multi-Box Shipping Notice

This product is packaged in 2 separate boxes for shipping and may arrive in batches at different times. To ensure a smooth assembly process, please make sure all boxes are received before unpacking and starting the installation.

2. Box and Packaging Verification

Each box is labeled with a corresponding number. Please refer to the packing list on the next page of this manual to verify that all boxes have been received.

If you find any missing boxes, damaged parts, or accessory shortages, please contact the customer service team of your purchasing channel immediately. We will resolve the issue as quickly as possible.

Safety and Care Advice

Important :
Please read these instructions fully before starting assembly.

- Check you have all the components and tools listed on the following pages.
- Remove all fittings from the plastic bags and separate them into their groups.
- Keep children and animals away from the work area, small parts could choke if swallowed.
- Make sure you have enough space to layout the parts before starting.
- During assembly do not stand or put weight on the product, this could cause damage.

Email : **service@grandtunnel.com**

EN

- Assemble the item as close to its final position (in the same room) as possible.
- Assemble on a soft level surface to avoid damaging the unit or your floor.
- Parts of the assembly will be easier with 2 people.



- To reduce the likelihood of damaging your product please ensure that your power drill is set on a low torque setting.

Care and Maintenance

- Only clean using a damp cloth and mild detergent, do not use bleach or abrasive cleaners.
- From time to time check that there are no loose screws on this unit.
- This product should not be discarded with household waste. Take to your local authority waste disposal center.

Handy Hints

- Assemble all parts and bolts loosely during assembly, only once the product is complete should you fully tighten the bolts.
- Regularly check and ensure that all bolts and fittings are tightened properly.

Warning

In order to help prevent overturning, please follow these instructions.

- Use the anti tip strap or wall fixing method provided (if applicable).
- Do not allow children to climb or hang on the furniture.
- Do not open more than one drawer at a time.
- Do not place heavy items in the top drawers.
- Do not place heavy items on top of the furniture, unless the furniture has been designed for this purpose.
- Please note that only the anti tip strap is provided. You will need to provide wall plugs and screws applicable for your wall type.

Email : **service@grandtunnel.com**

Customer Service Guide

Thank you for choosing our product! We are committed to providing you with excellent service. If you find any missing parts, damaged packaging, or product damage after receiving all packages, please follow the steps below to quickly contact our customer service team. We will do our best to resolve your issue.

1. Missing Parts

Verify Parts:

1. Refer to the “Parts List” in the manual to verify the name, specifications, and quantity of the missing parts.
2. Take a clear photo of the parts list and mark the missing parts with detailed information, e.g., “Missing 5 pieces of M6×30mm screws.”

Contact Us:

By Email:

Send an email to **service@grandtunnel.com**, with the subject line “Missing Parts Issue.” Include the following in the email:

- A description of the missing parts and a photo of the parts list.
- Order details (order number, purchase platform, purchase date).

2. Product or Packaging Damage

If it affects normal use:

Steps:

1. Take clear photos or videos showing the damaged parts and the extent of the damage (multi-angle shots are recommended).
2. Email the photos/videos along with order details to **service@grandtunnel.com**, with the subject line “Product Damage Issue.”

Resolution:

After verification, we will arrange for a replacement part, product exchange, or refund as quickly as possible.

EN

If it does not affect normal use:

Steps:

1. Contact our customer service team (by email: **service@grandtunnel.com**).
2. Provide a description of the damage and include relevant photos or videos.

Resolution:

We will provide repair guidance or an appropriate compensation plan based on the specific situation.

Contact Us:

Customer Service Email: **service@grandtunnel.com**

Helpful Tips

To process your issue efficiently, please prepare the following information:

- Order details (order number, purchase platform, purchase date).
- Clear photos or videos.
- We are committed to providing quick and professional solutions, no matter the size of the issue, to ensure your satisfaction.

Thank you for your trust and support!
We hope you enjoy using our product!

EN

Parts List - Panels

Please check you have all the panels listed below.

Box 1

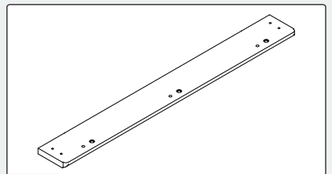

1 85*10.6*1.8cm **x1**

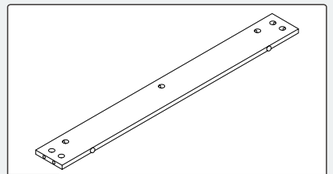

4 78.8*9.4*1.2cm **x1**

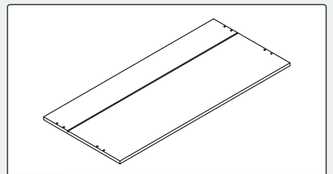

5 81.2*36.5*1.2cm **x1**

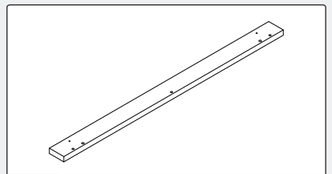

10 71.3*4.7*1.5cm **x1**

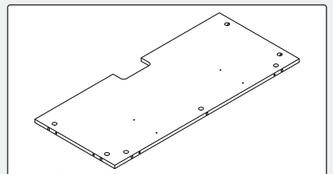

11 78.8*34*1.2cm **x1**

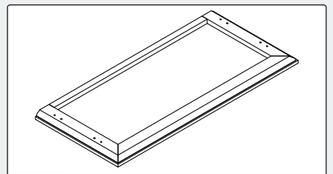

12 86.7*39.7*3cm **x1**

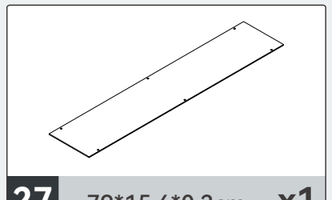

27 79*15.6*0.3cm **x1**

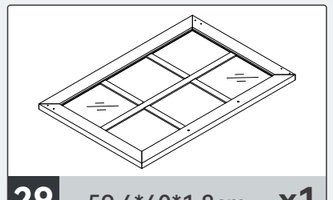

29 59.4*40*1.8cm **x1**

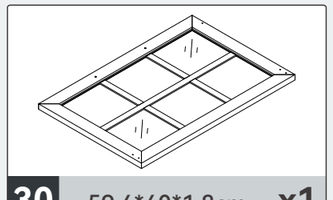

30 59.4*40*1.8cm **x1**

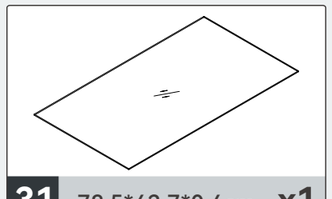

31 78.5*43.7*0.4cm **x1**

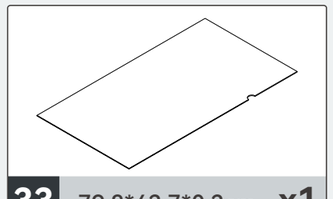

33 79.8*43.7*0.3cm **x1**

Box 1（Fireplace)

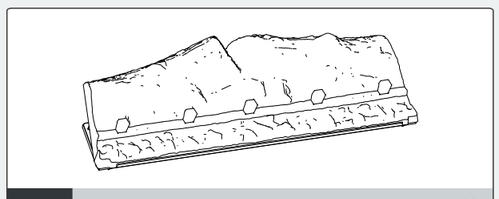

AA **x1**

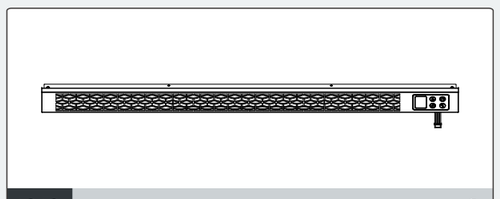

BB **x1**

Email : **service@grandtunnel.com**

Box 2

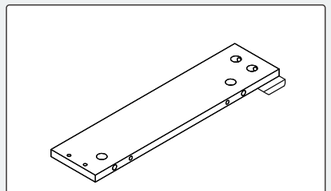

2 36.5*9.4*3cm **x1**

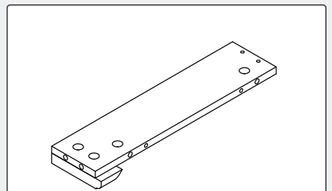

3 36.5*9.4*3cm **x1**

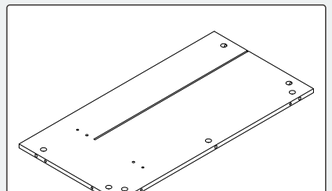

6 66.5*34*1.2cm **x1**

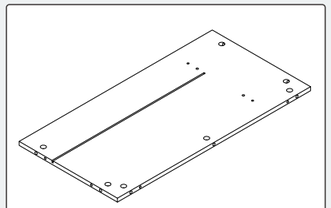

7 66.5*34*1.2cm **x1**

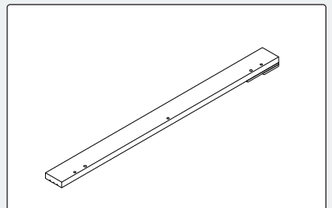

8 66.5*5*2.5cm **x1**

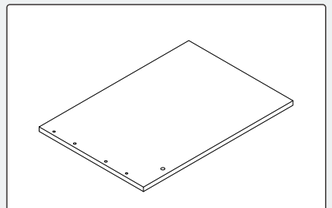

13 46.2*32.1*1.2cm **x1**

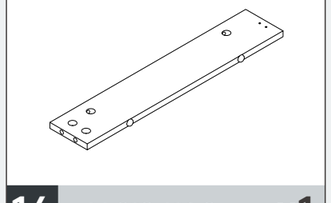

14 46.2*9.4*1.2cm **x1**

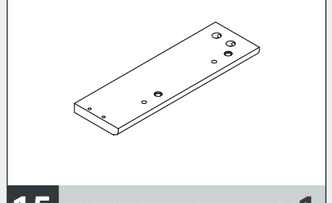

15 32.2*10.6*1.8cm **x1**

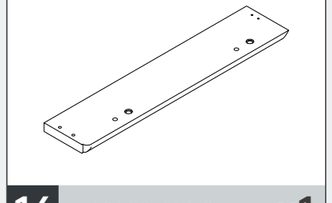

16 48*10.6*1.8cm **x1**

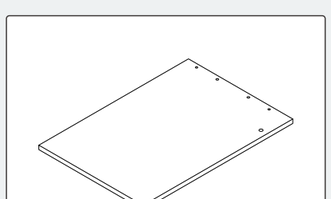

17 46.2*32.1*1.2cm **x1**

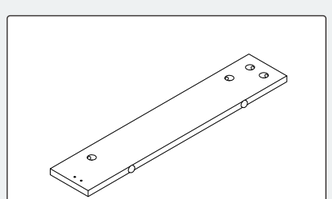

18 46.2*9.4*1.2cm **x1**

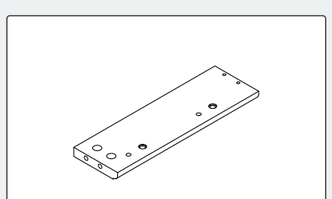

19 32.2*10.6*1.8cm **x1**

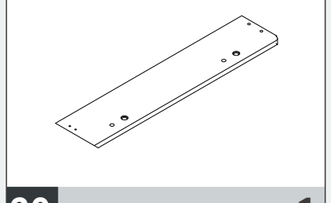

20 48*10.6*1.8cm **x1**

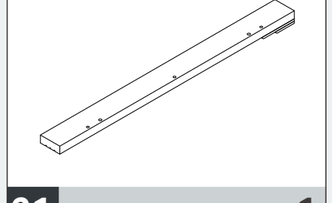

21 60*5*1.8cm **x1**

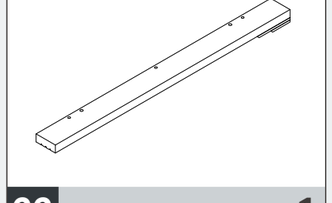

22 60*5*1.8cm **x1**

EN

Email : **service@grandtunnel.com**

Box 2 (continued)

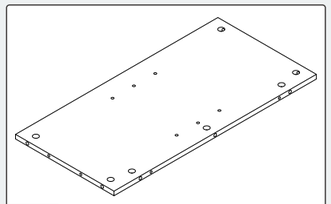

23 60*29.5*1.2cm x2

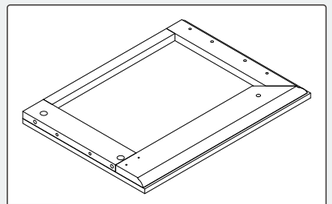

24 48.2*35.4*3cm x1

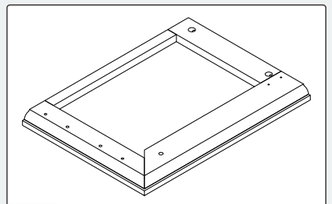

25 48.2*35.4*3cm x1

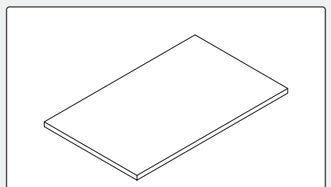

26 43.8*26.9*1.2cm x2

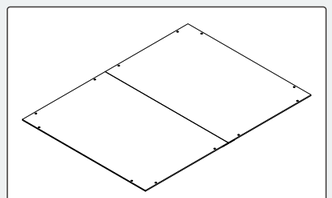

28 62.4*46.8*0.3cm x2

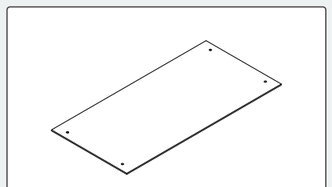

32 45*22*0.3cm x2

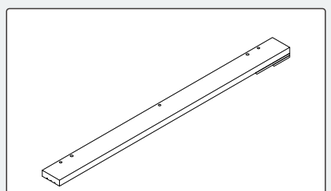

34 66.5*5*2.5cm x1

Box 2（Fireplace)

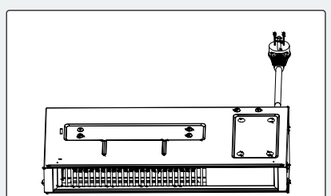

CC x1

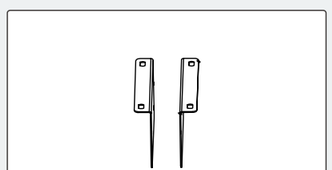

DD x2

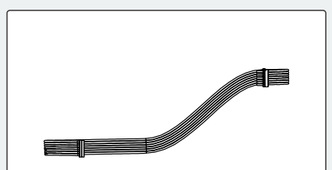

EE x1

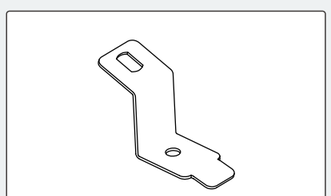

FF x2

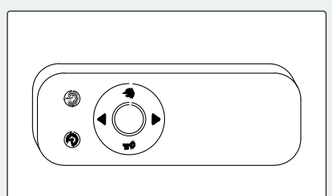

Remote control x1

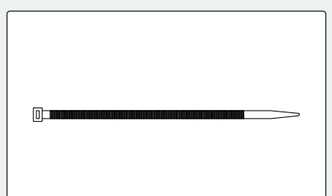

Plastic cable tie x1

Email : **service@grandtunnel.com**

Parts List - Fittings (in Box 1)

Please check you have all the fittings listed below.

Note: The quantities below are the correct amount to complete the assembly.
In some cases more fittings may be supplied are required.

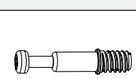

7*34mm Cam Bolt
A x66+4



Cam Lock
B x66+4



6*30mm Wooden Dowel
C x44+4



Shelf Pin
D x8



Plastic Connector
E x15



Ø1/4"*12mm Screw
F x30+3

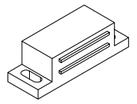

Magnet
G x2

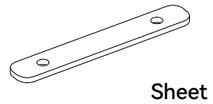

Sheet iron
H x2

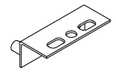

Pivot hinge(Left)
I x2



Pivot hinge(Right)
J x2



Hinge rubber sleeve
K x4

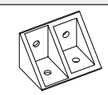

Plastic Connector
L x4



M5*12mm Screw
M x6

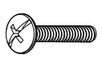

Ø5/32"*25mm Screw
N x4



Ø2.9*12mm Screw
O x16+1



Ø3.9*12mm Screw
P x16+1



Beauty patch
Q x39+4

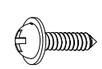

Ø3.5*12mm Screw
R x50+4

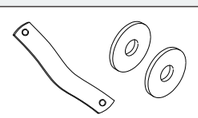

S x2



T x2

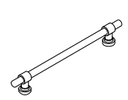

Handle
U x2

EN

EN

Assembly Instructions

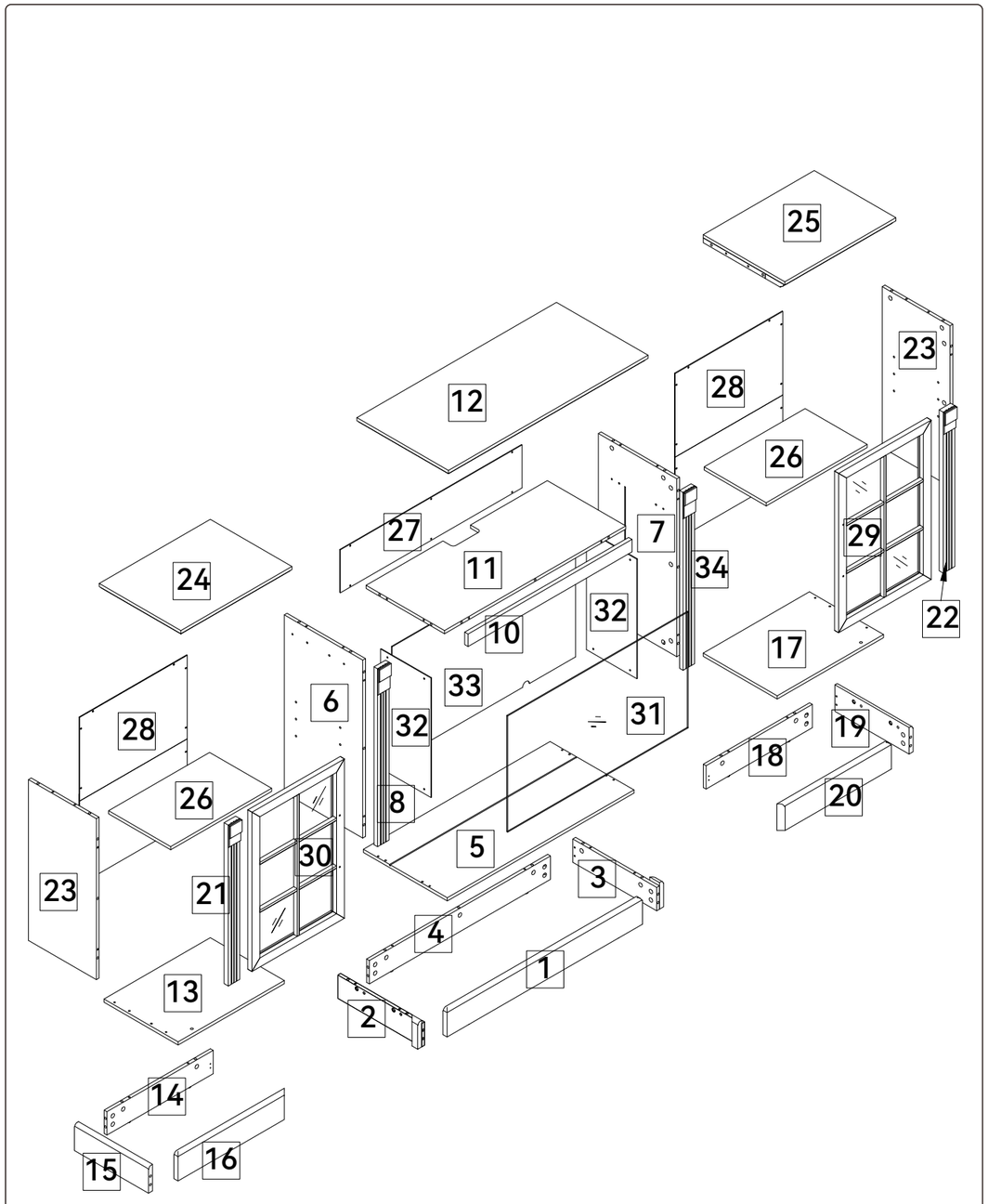

Email : **service@grandtunnel.com**

EN

Step 1

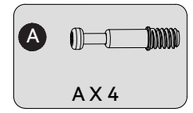

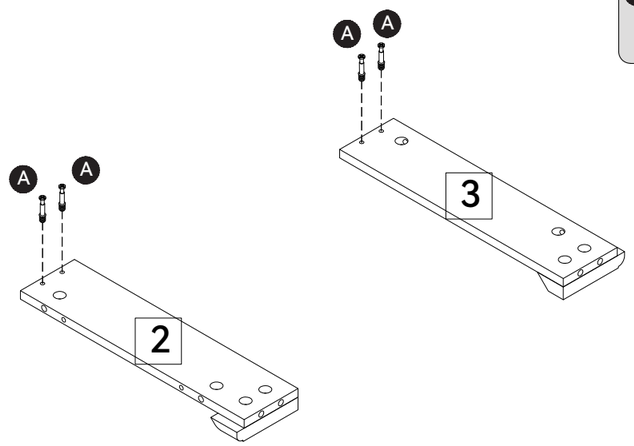

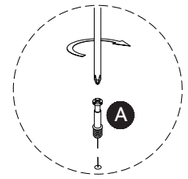

A. Install 2 cam lock screws (A) into panel (Middle Panel 2).
B. Install 2 cam lock screws (A) into panel (Middle Panel 3).

Step 2

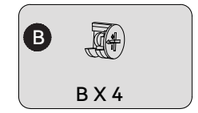

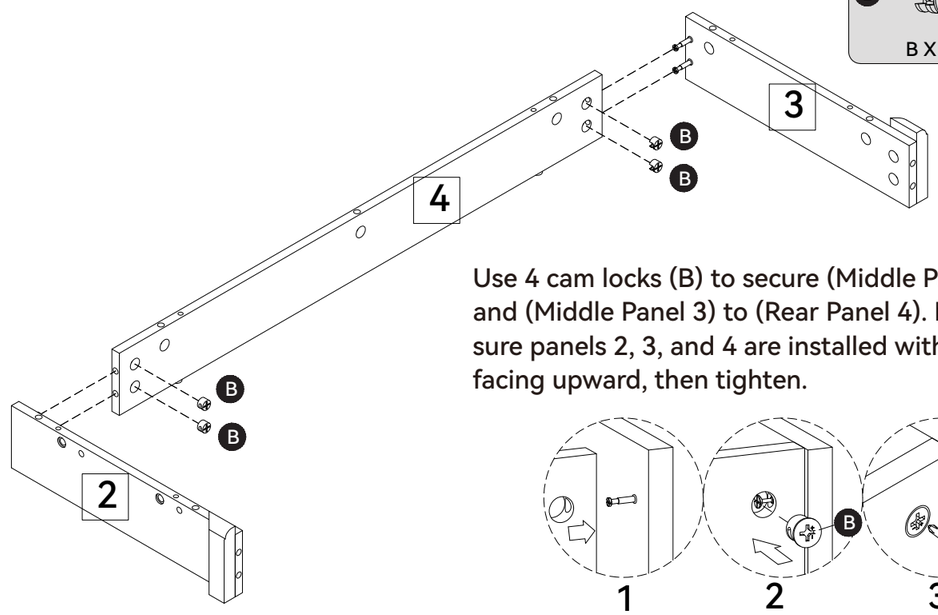

Use 4 cam locks (B) to secure (Middle Panel 2) and (Middle Panel 3) to (Rear Panel 4). Make sure panels 2, 3, and 4 are installed with holes facing upward, then tighten.

Email : **service@grandtunnel.com**

EN

Step 3

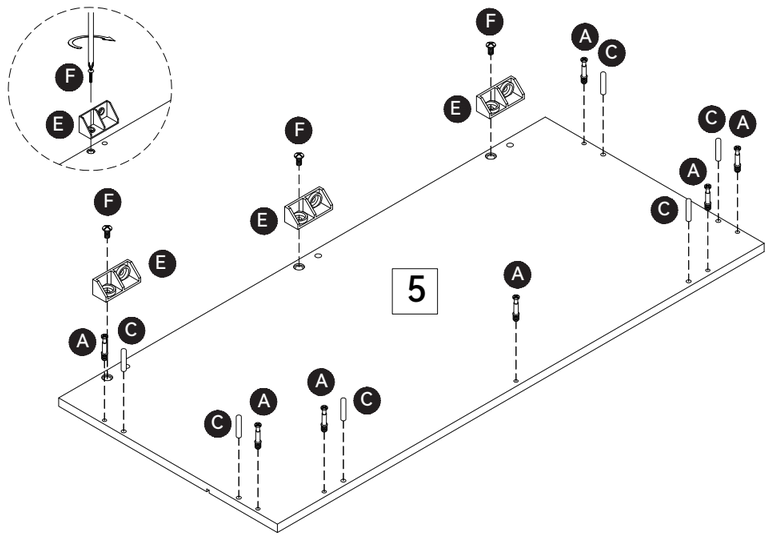

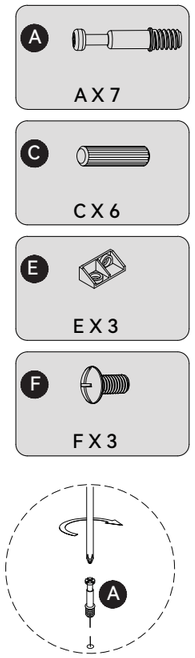

A. Use 3 screws (F) to fix 3 plastic fasteners (E) onto (Bottom Panel 5).
B. Install 7 cam lock screws (A) into (Bottom Panel 5) and insert 6 wooden dowels (C).

Step 4

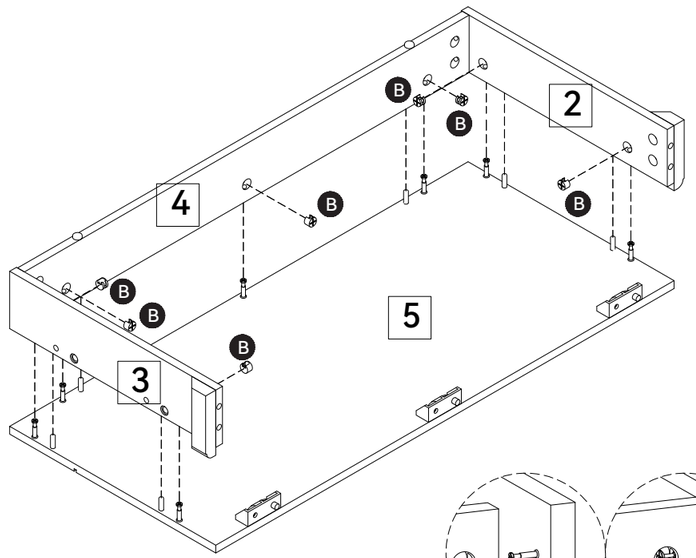

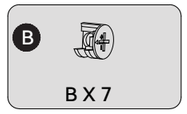

Use 7 cam locks (B) to secure (Middle Panel 2), (Middle Panel 3), and (Rear Panel 4) to (Bottom Panel 5), then tighten.

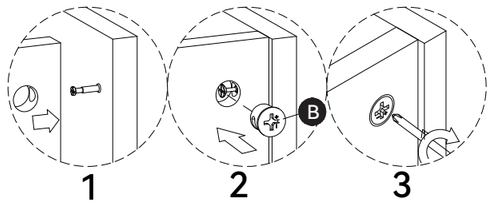

Email : **service@grandtunnel.com**

EN

Step 5

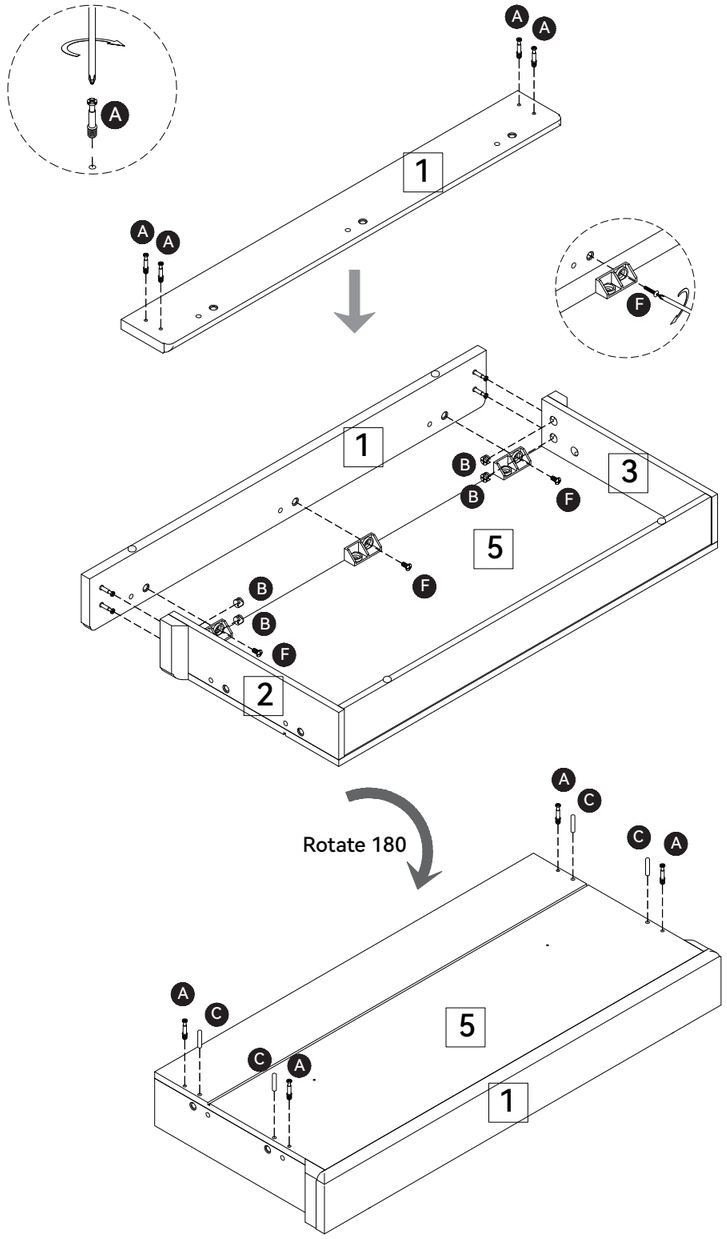

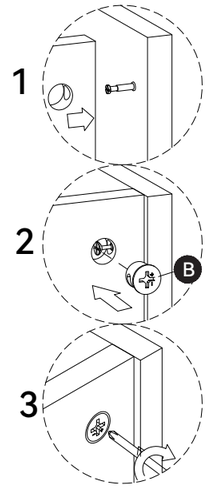

A. Install 4 cam lock screws (A) into (Front Panel 1).
B. Use 4 cam locks (B) to secure (Front Panel 1) to (Middle Panel 2) and (Middle Panel 3).
C. Use 3 screws (F) through the plastic fasteners (E) to secure (Front Panel 1).
D. Flip (Bottom Panel 5), install 4 cam lock screws (A) on the back side, and insert 4 wooden dowels (C).

Email : **service@grandtunnel.com**

Step 6

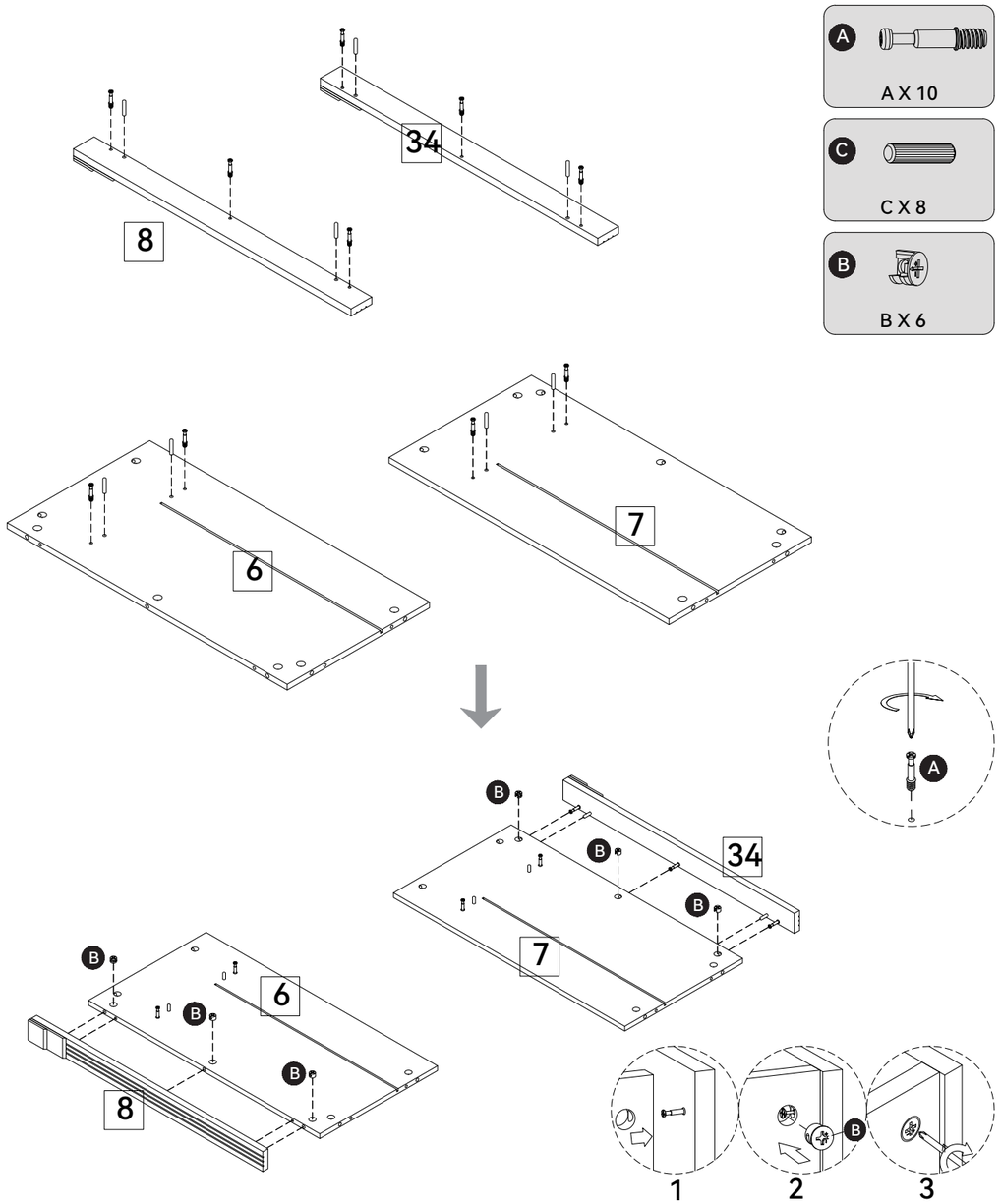

A. Install 3 cam lock screws (A) and insert 2 wooden dowels (C) into (Side Front Rail 8).
B. Install 3 cam lock screws (A) and insert 2 wooden dowels (C) into (Side Front Rail 34).
C. Install 2 cam lock screws (A) and insert 2 wooden dowels (C) into (Side Panel 6).
D. Install 2 cam lock screws (A) and insert 2 wooden dowels (C) into (Side Panel 7).
E. Use 3 cam locks (B) to secure (Side Front Rail 8) to (Side Panel 6), then tighten.
F. Use 3 cam locks (B) to secure (Side Front Rail 34) to (Side Panel 7), then tighten.

Step 7

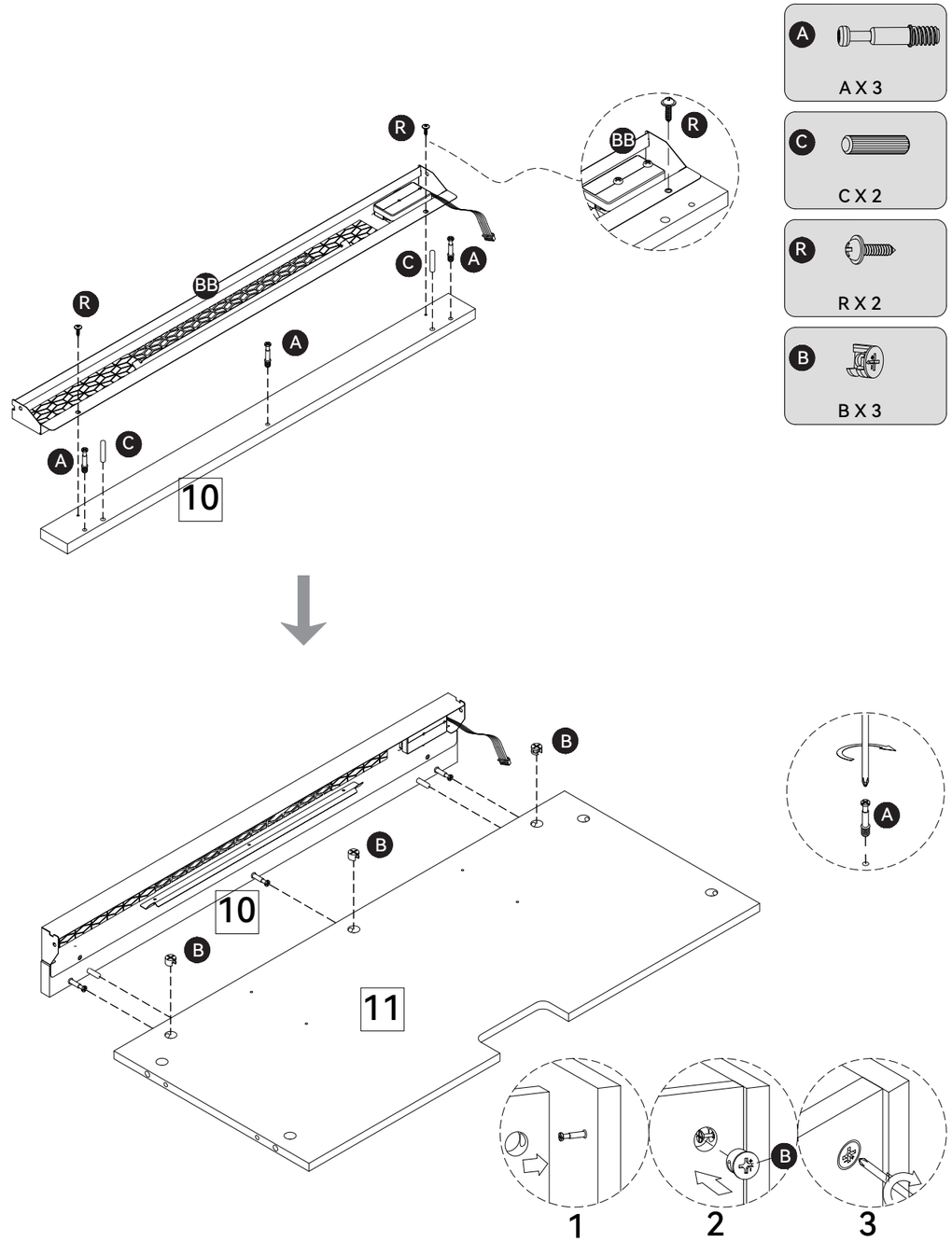

A. Install 3 cam lock screws (A) and insert 2 wooden dowels (C) into (Shelf Front Rail 10).
B. Use 2 screws (R) to fix the air outlet (BB) onto (Shelf Front Rail 10).
C. Use 3 cam locks (B) to secure (Shelf Front Rail 10) to (Shelf Panel 11), then tighten.

Step 8

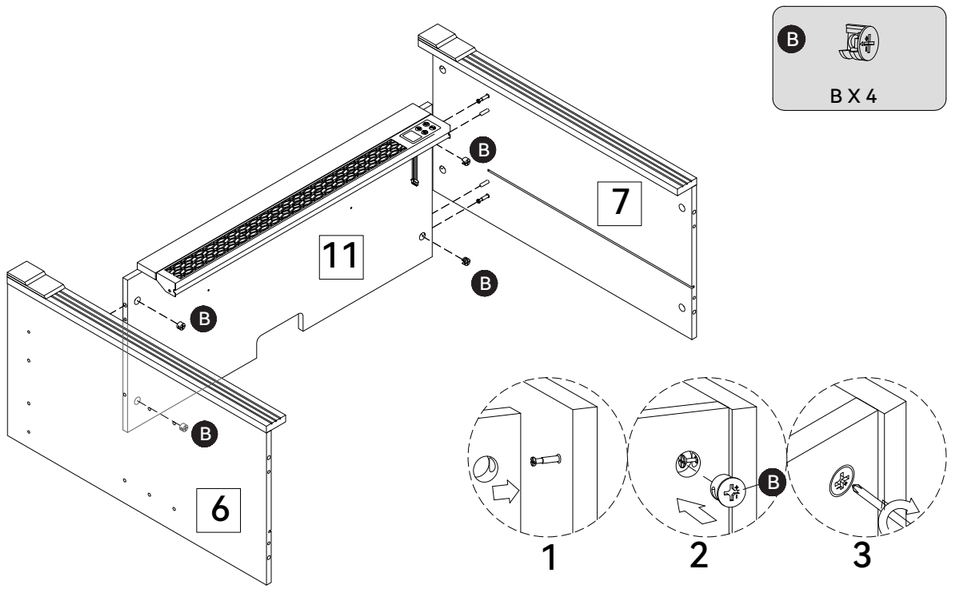

Use 4 cam locks (B) to secure (Side Panel 6) and (Side Panel 7) to (Shelf Panel 11), then tighten.

Step 9

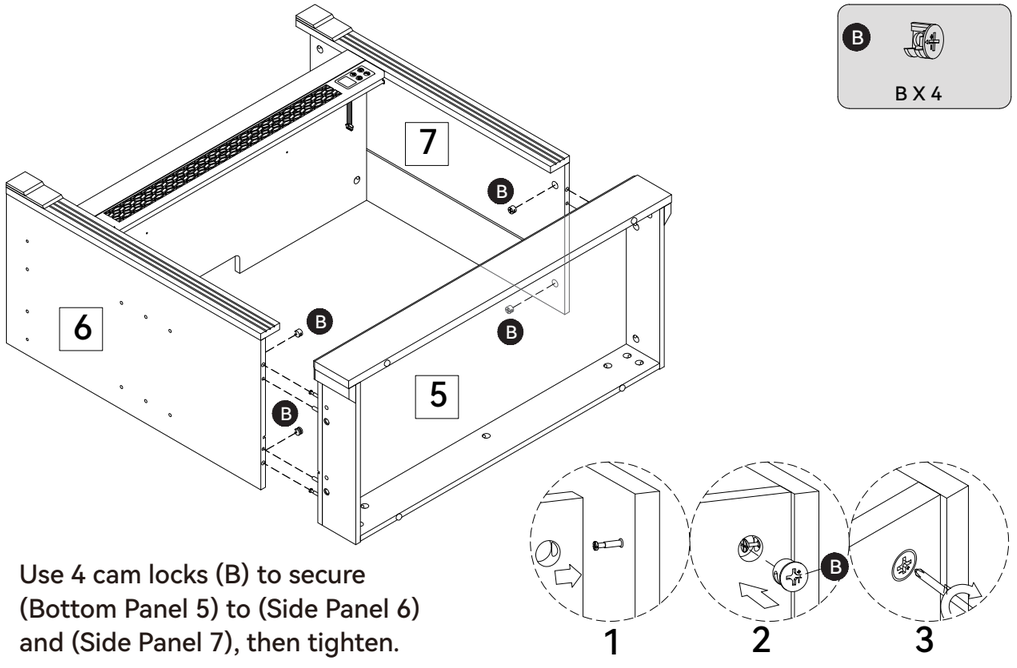

Use 4 cam locks (B) to secure (Bottom Panel 5) to (Side Panel 6) and (Side Panel 7), then tighten.

Email : **service@grandtunnel.com**

EN

Step 10

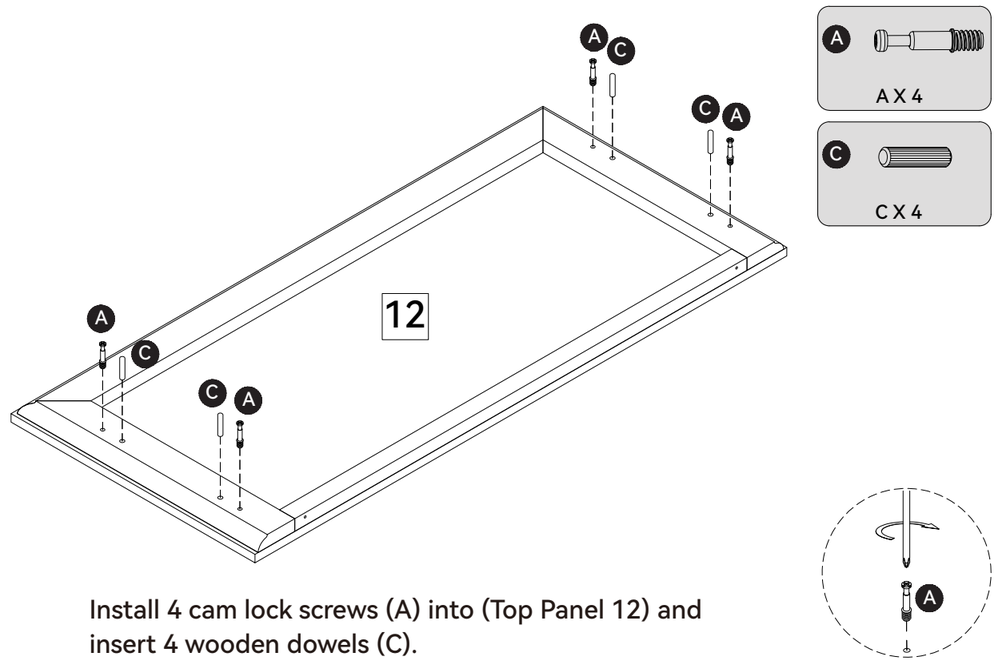

Install 4 cam lock screws (A) into (Top Panel 12) and insert 4 wooden dowels (C).

Step 11

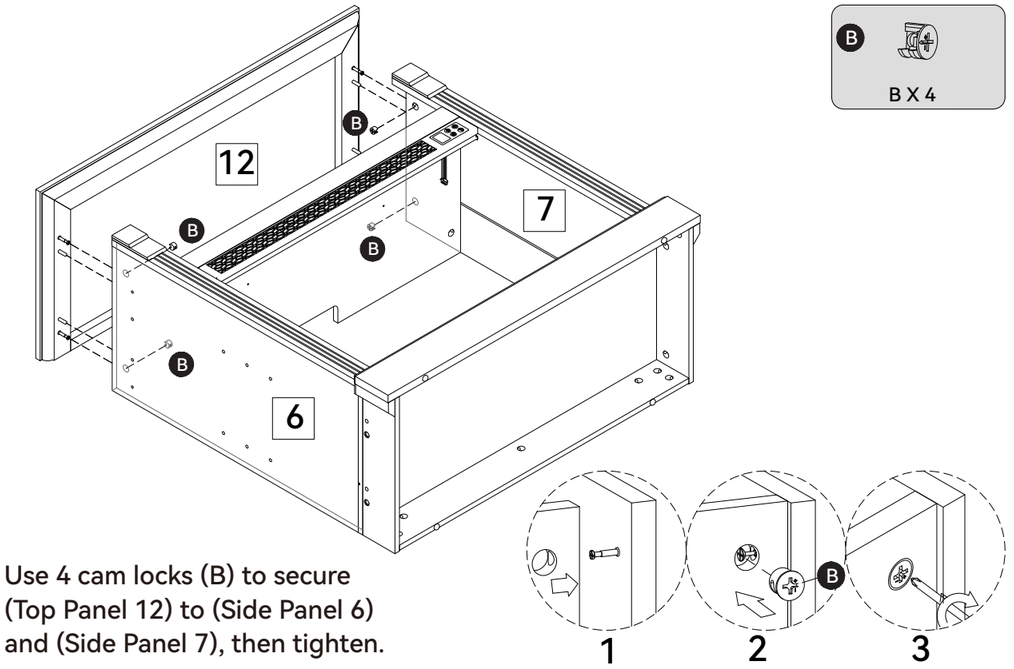

Use 4 cam locks (B) to secure (Top Panel 12) to (Side Panel 6) and (Side Panel 7), then tighten.

Email : **service@grandtunnel.com**

Step 12

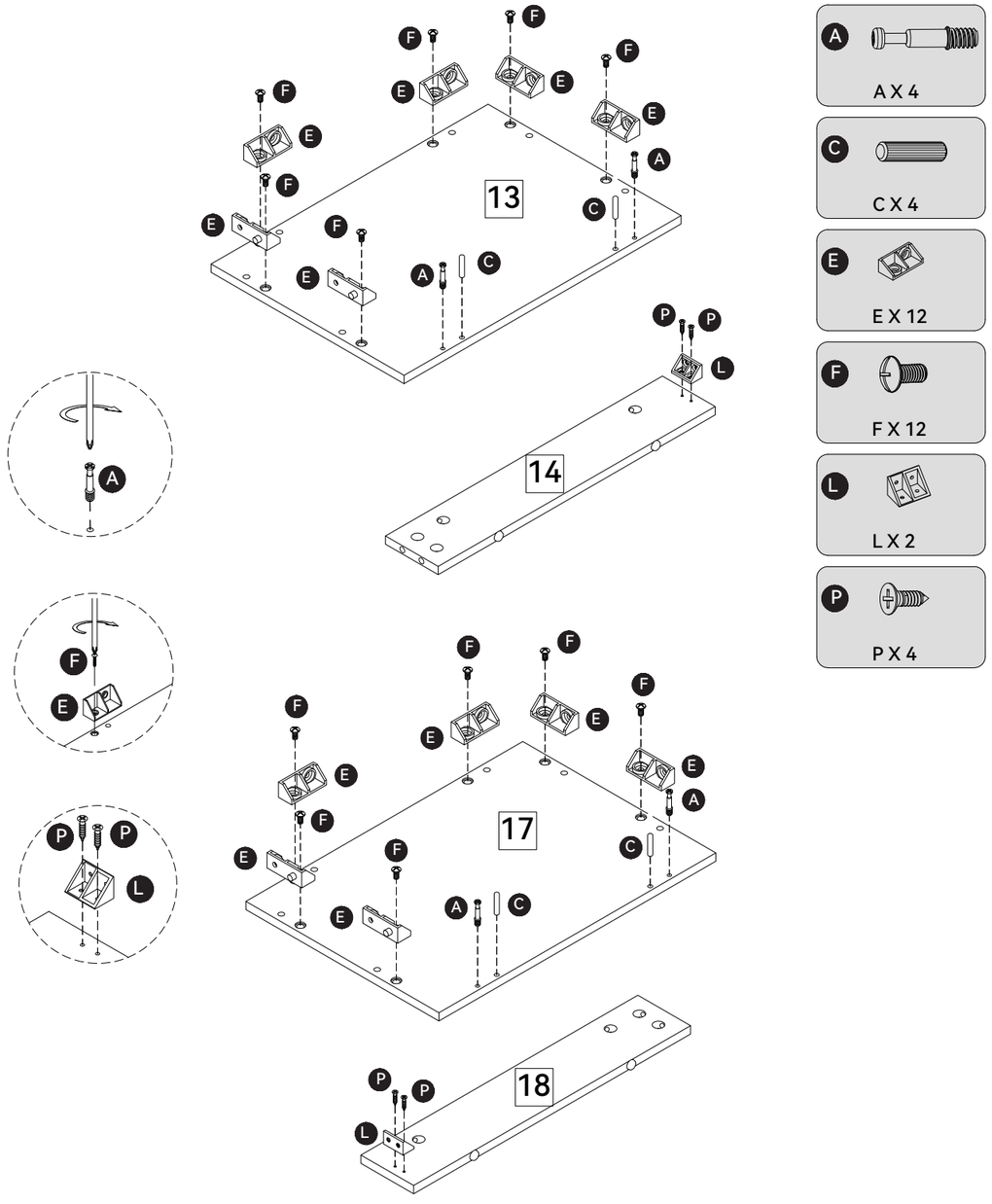

A X 4
C X 4
E X 12
F X 12
L X 2
P X 4

A. Use 6 screws (F) to fix 6 plastic fasteners (E) onto (Bottom Panel 13), then install 2 cam lock screws (A) and insert 2 wooden dowels (C).
B. Use 2 screws (P) to fix 1 plastic fastener (L) onto (Rear Panel 14).
C. Use 6 screws (F) to fix 6 plastic fasteners (E) onto (Bottom Panel 17), then install 2 cam lock screws (A) and insert 2 wooden dowels (C).
D. Use 2 screws (P) to fix 1 plastic fastener (L) onto (Rear Panel 18).

Email : **service@grandtunnel.com**

Step 13

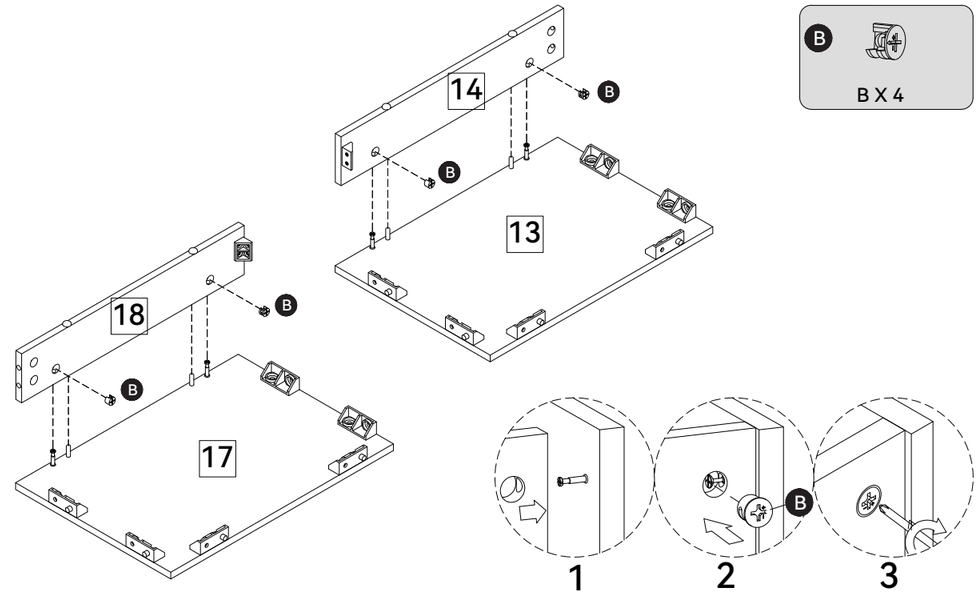

B X 4

A. Use 2 cam locks (B) to secure (Rear Panel 14) to (Bottom Panel 13), then tighten.
B. Use 2 cam locks (B) to secure (Rear Panel 18) to (Bottom Panel 17), then tighten.

Step 14

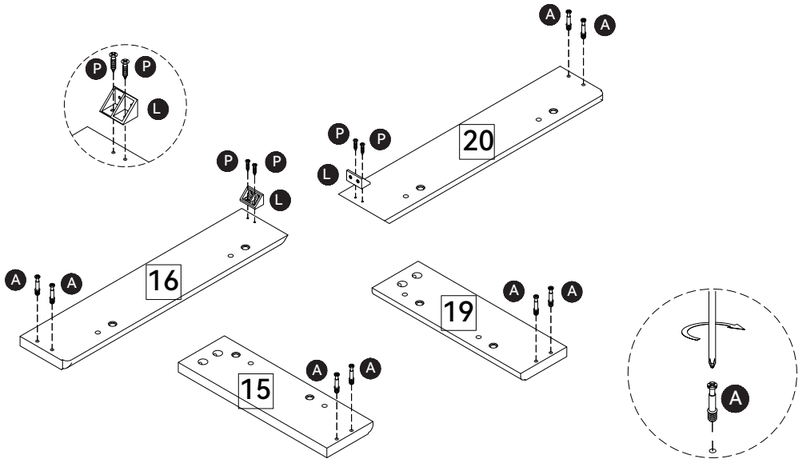

A X 8
L X 2
P X 4

A. Install 2 cam lock screws (A) into (Side Panel 15).
B. Install 2 cam lock screws (A) into (Side Panel 19).
C. Use 2 screws (P) to fix 1 plastic fastener (L) onto (Front Side Panel 16), then install 2 cam lock screws (A).
D. Use 2 screws (P) to fix 1 plastic fastener (L) onto (Front Side Panel 20), then install 2 cam lock screws (A).

Email : **service@grandtunnel.com**

Step 15

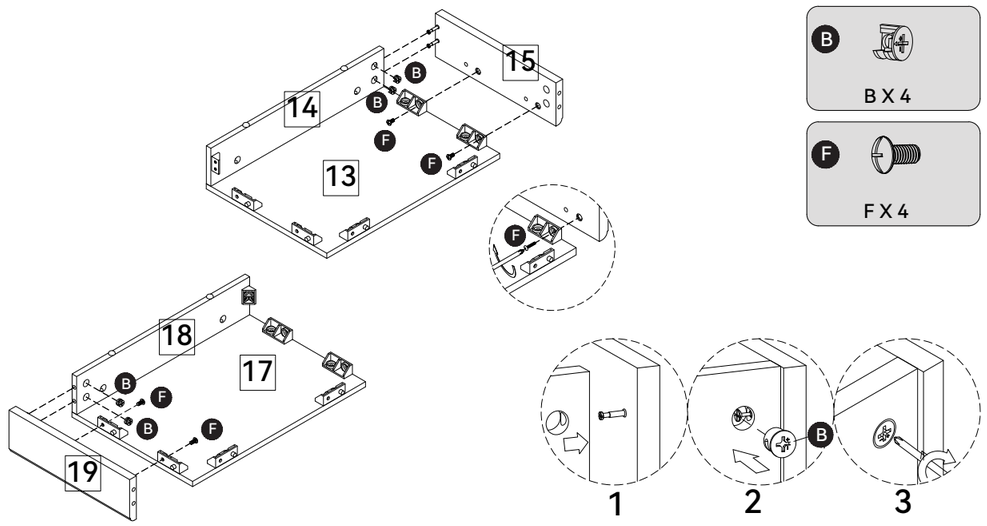

A. Use 2 cam locks (B) to secure (Side Panel 15) to (Rear Panel 14), and use 2 screws (F) through the plastic fasteners to fix (Side Panel 15).
B. Use 2 cam locks (B) to secure (Side Panel 19) to (Rear Panel 18), and use 2 screws (F) through the plastic fasteners to fix (Side Panel 19).

Step 16

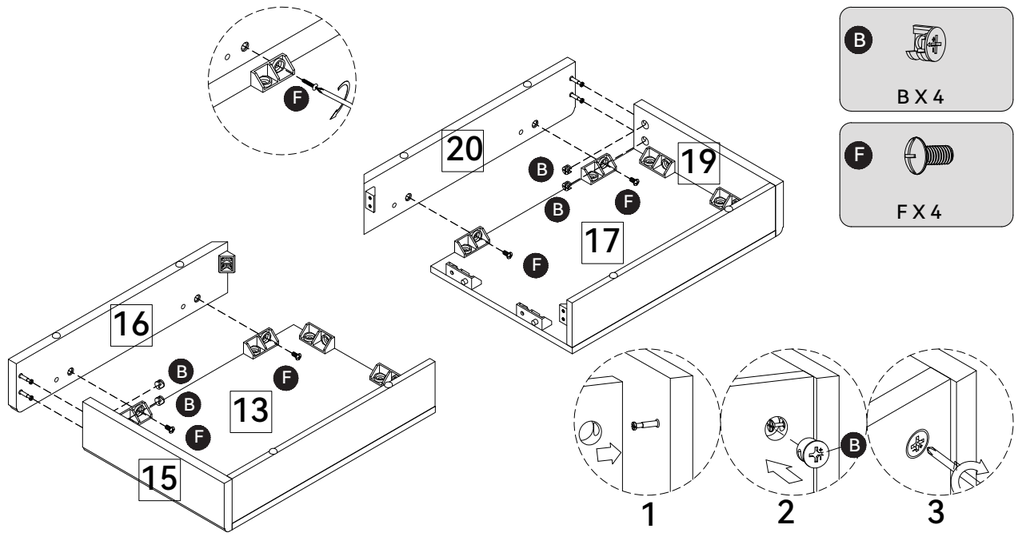

A. Use 2 cam locks (B) to secure (Front Panel 16) to (Side Panel 15), and use 2 screws (F) through the plastic fasteners to fix (Front Panel 16).
B. Use 2 cam locks (B) to secure (Front Panel 20) to (Side Panel 19), and use 2 screws (F) through the plastic fasteners to fix (Front Panel 20).

Email : **service@grandtunnel.com**

Step 17

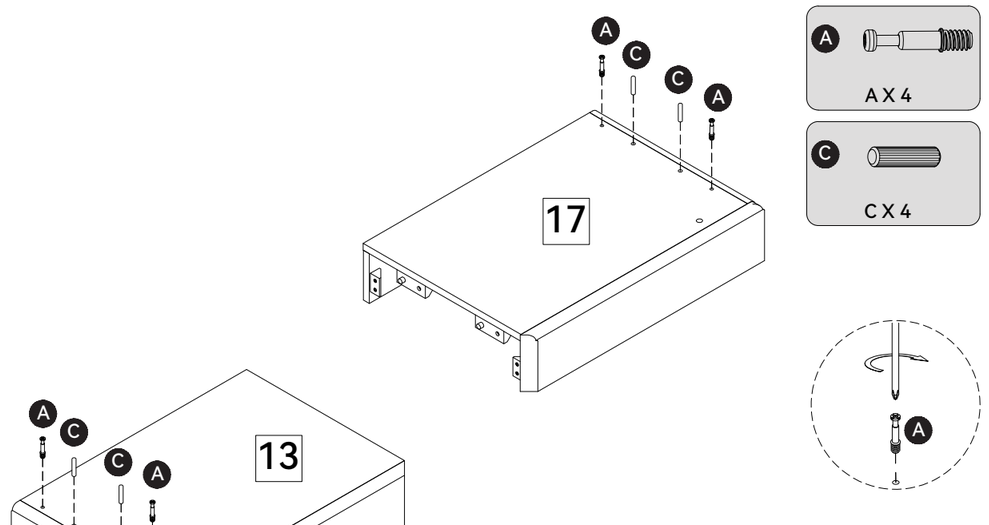

A. Install 2 cam lock screws (A) into (Bottom Panel 13) and insert 2 wooden dowels (C).
B. Install 2 cam lock screws (A) into (Bottom Panel 17) and insert 2 wooden dowels (C).

Step 18

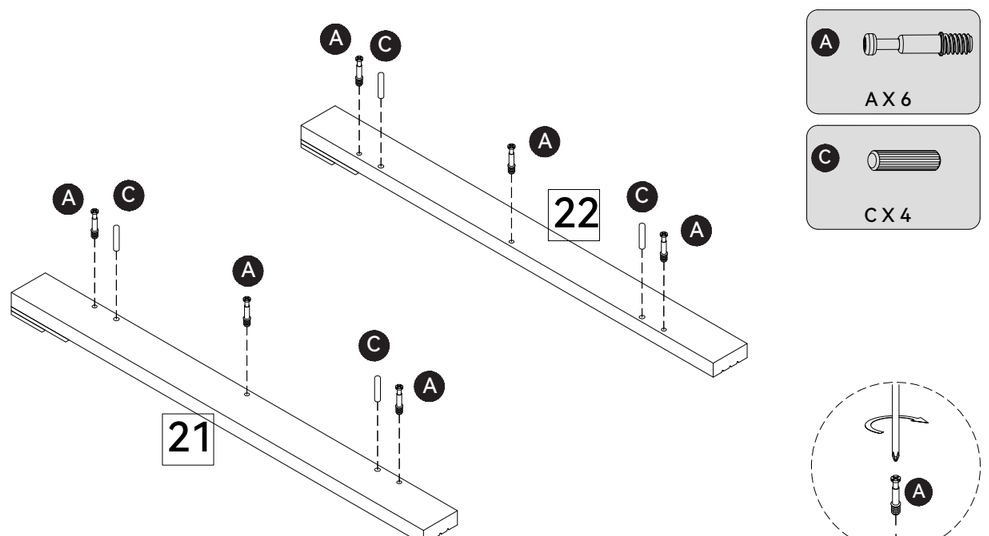

A. Install 3 cam lock screws (A) and insert 2 wooden dowels (C) into (Side Front Rail 21).
B. Install 3 cam lock screws (A) and insert 2 wooden dowels (C) into (Side Front Rail 22).

Email : **service@grandtunnel.com**

EN

Step 19

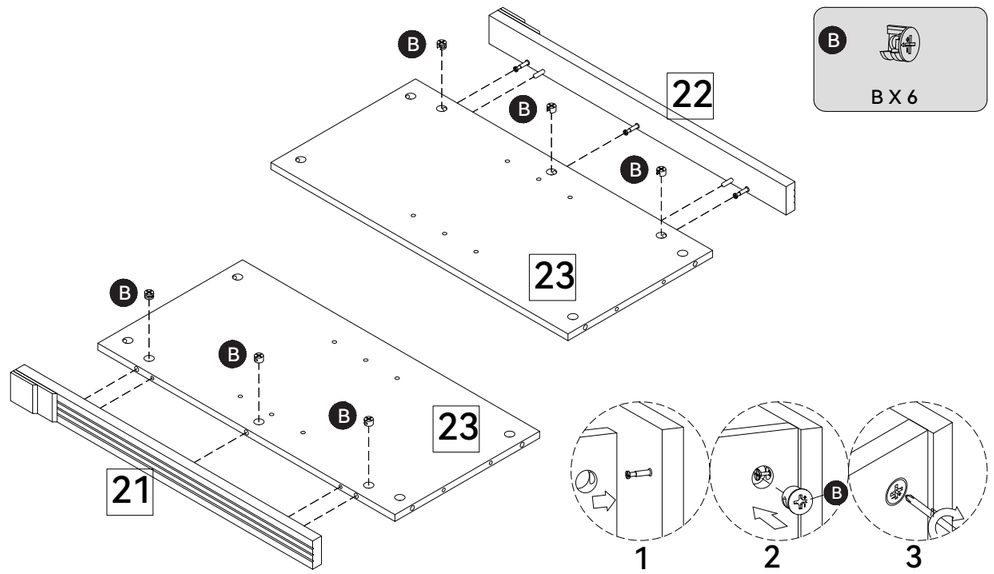

A. Use 3 cam locks (B) to secure (Side Front Rail 21) to (Side Panel 23), then tighten.
B. Use 3 cam locks (B) to secure (Side Front Rail 22) to (Side Panel 23), then tighten.

Step 20

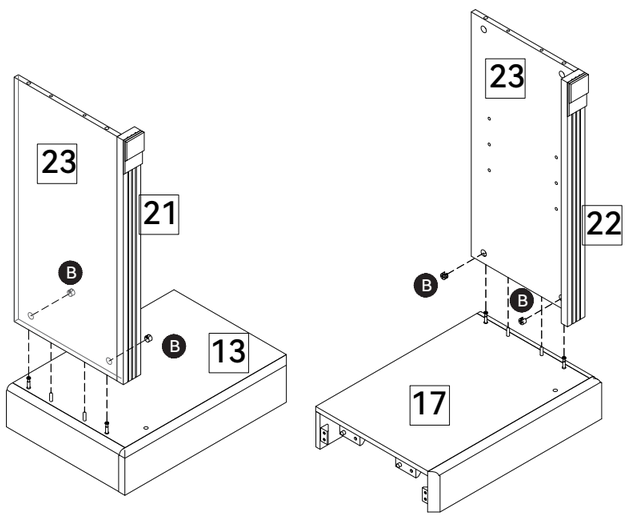

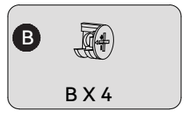

A. Use 2 cam locks (B) to secure (Side Front Rail 21) and (Side Panel 23) to (Bottom Panel 13), then tighten.
B. Use 2 cam locks (B) to secure (Side Front Rail 22) and (Side Panel 23) to (Bottom Panel 17), then tighten.

Email : **service@grandtunnel.com**

Step 21

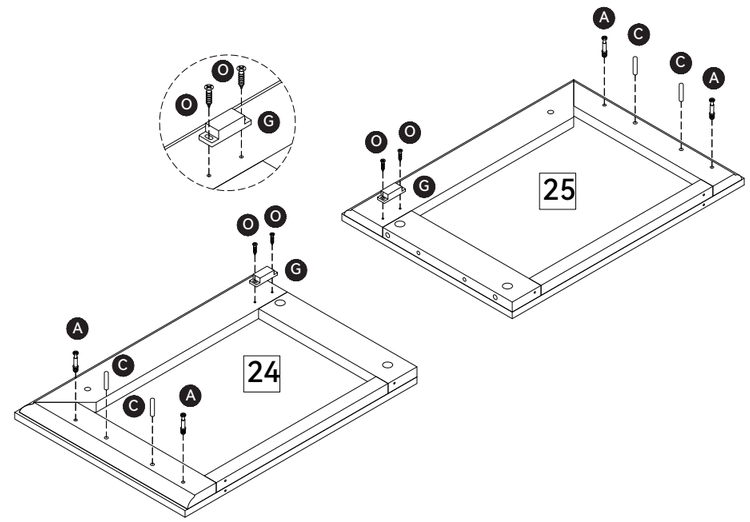

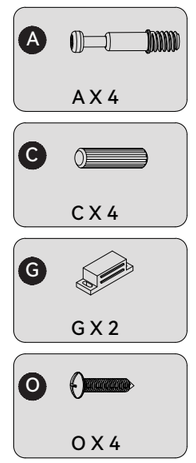

A. Use 2 screws (O) to fix 1 magnet (G) onto (Panel 24), then install 2 cam lock screws (A) and insert 2 wooden dowels (C).
B. Use 2 screws (O) to fix 1 magnet (G) onto (Panel 25), then install 2 cam lock screws (A) and insert 2 wooden dowels (C).

Step 22

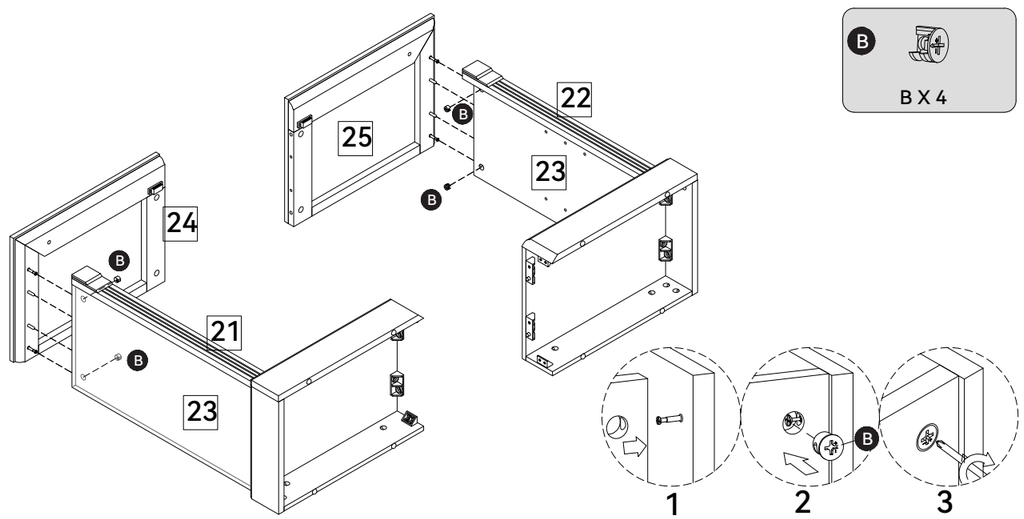

A. Use 2 cam locks (B) to secure (Panel 24) to (Side Panel 23) and (Side Front Rail 21), then tighten.
B. Use 2 cam locks (B) to secure (Panel 25) to (Side Panel 23) and (Side Front Rail 22), then tighten.

Email : **service@grandtunnel.com**

Step 23

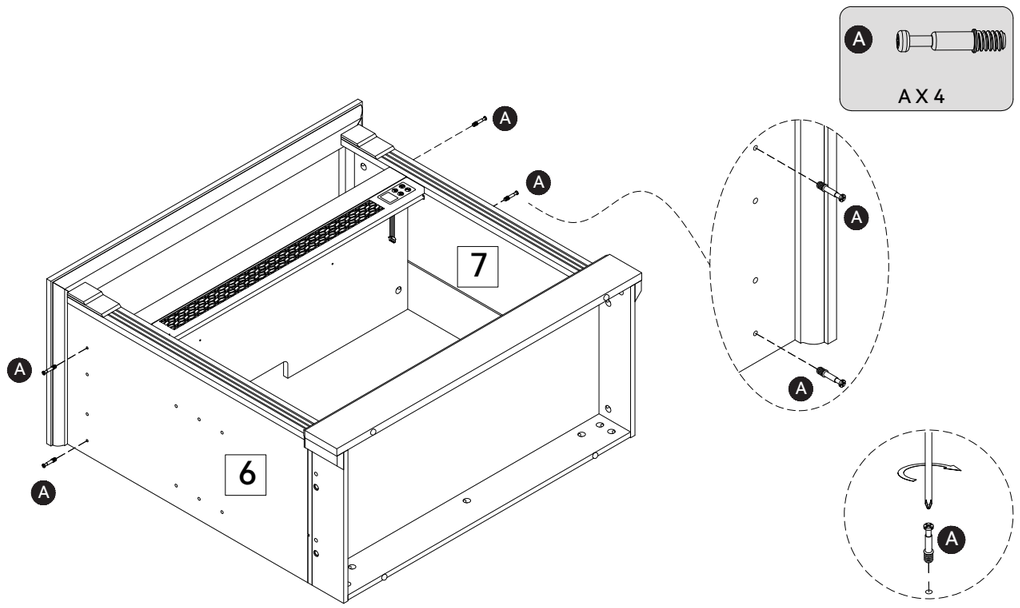

Install 4 cam lock screws (A) into (Side Panel 6) and (Side Panel 7).

Step 24

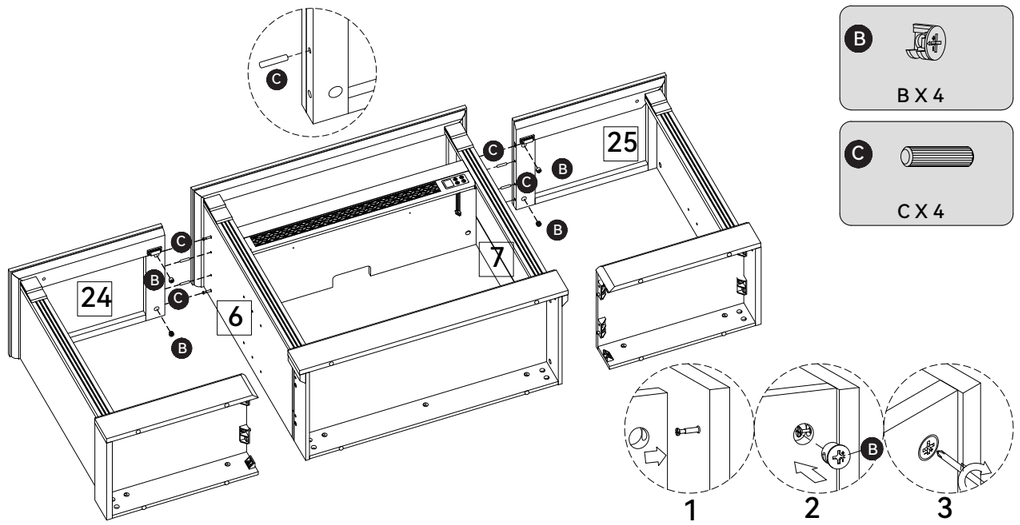

A. Insert 2 wooden dowels (C) into (Panel 24), then use 2 cam locks (B) to secure (Panel 24) to (Side Panel 6).
B. Insert 2 wooden dowels (C) into (Panel 25), then use 2 cam locks (B) to secure (Panel 25) to (Side Panel 7).

Email : **service@grandtunnel.com**

Step 25

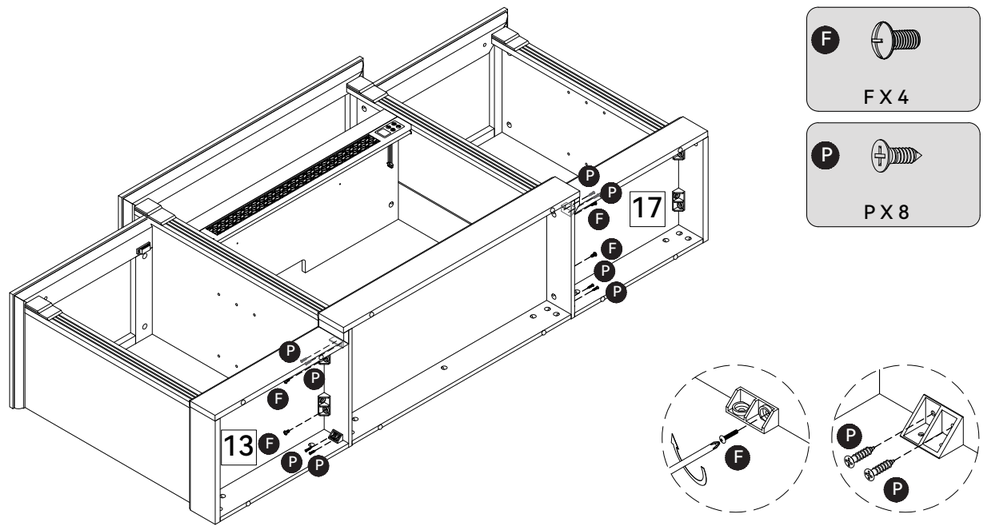

A. Use 4 screws (F) through plastic fasteners (E) to secure (Bottom Panel 13) and (Bottom Panel 17).
B. Use 8 screws (P) through plastic fasteners (L) to secure (Vertical Panel 14), (Vertical Panel 16), (Vertical Panel 18), and (Vertical Panel 20).

Step 26

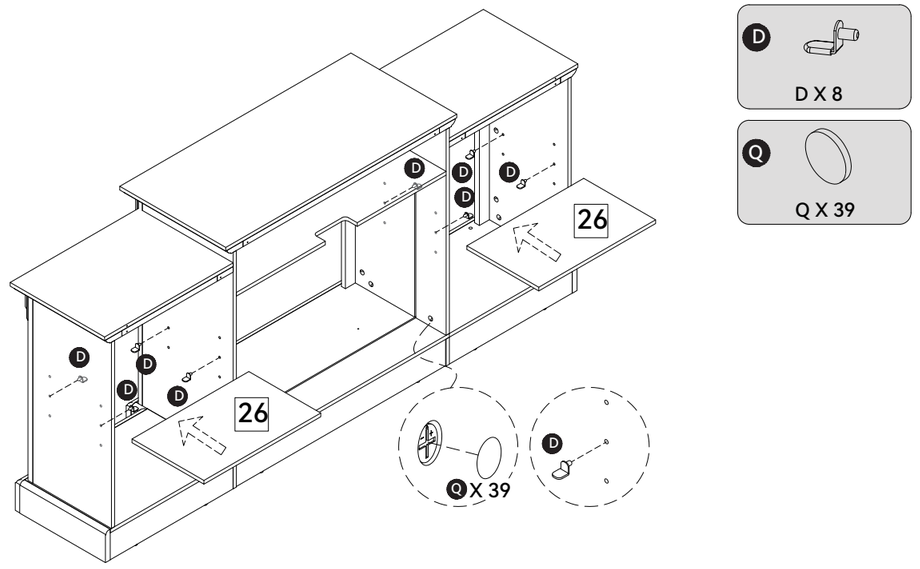

A. Insert 8 shelf supports (D) into (Side Panel 6), (Side Panel 7), and (Side Panel 23), then place (Shelf Panel 26).
B. Attach 39 hole covers (Q) onto the cam lock (B) holes.

Email : **service@grandtunnel.com**

Step 27

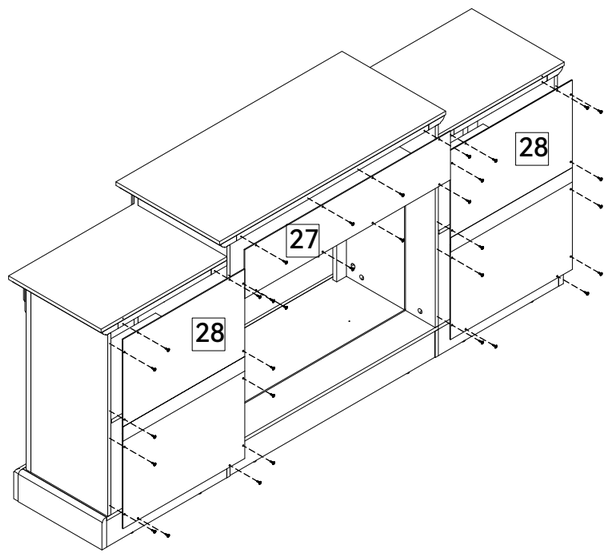

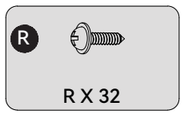

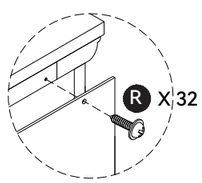

A. Use 12 screws (R) to fix (Back Panel 28) to panels, side panels, and bottom panels.
B. Use 8 screws (R) to fix (Back Panel 27) to panels, side panels, and shelf panels.
C. Use 12 screws (R) to fix (Back Panel 28) to panels, side panels, and bottom panels.

Step 28

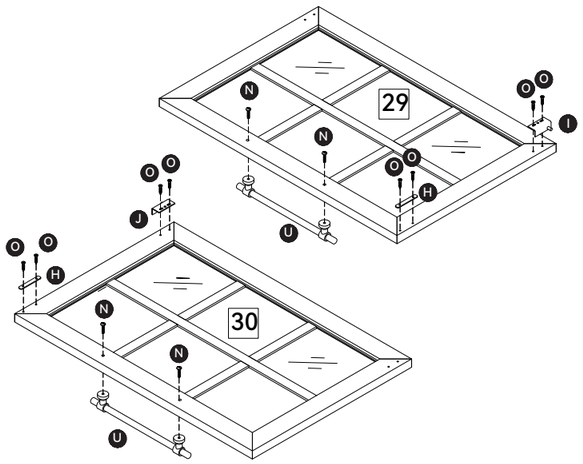

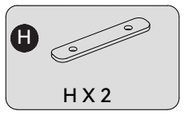

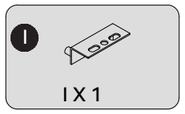

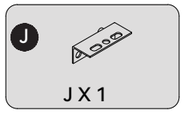

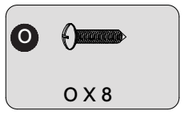

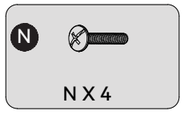

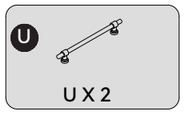

A. Use 2 screws (O) to fix the metal plate (H) onto (Door Panel 30), use 2 screws (O) to fix hinge (J) onto (Door Panel 30), and use 2 screws (N) to fix the handle (U) onto (Door Panel 30).
B. Use 2 screws (O) to fix the metal plate (H) onto (Door Panel 29), use 2 screws (O) to fix hinge (I) onto (Door Panel 29), and use 2 screws (N) to fix the handle (U) onto (Door Panel 29).

Email : **service@grandtunnel.com**

Step 29

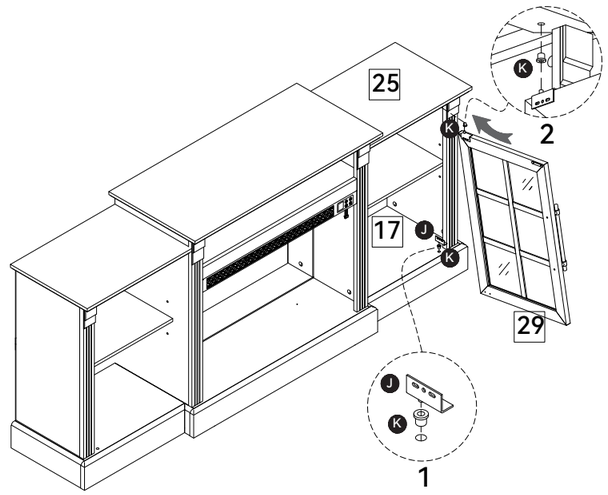

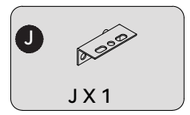

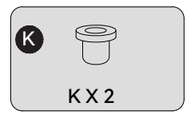

A. Insert 1 hinge sleeve (K) into the pre-drilled hole of (Bottom Panel 17).
B. Align the hinge (J) shaft with the installed hinge sleeve (K) and insert it.
C. Insert another hinge sleeve (K) into the hinge on (Door Panel 29), then align the shaft end with the hole on (Panel 25) and insert it.
D. Place the bottom of (Door Panel 29) onto the hinge base (J) on (Bottom Panel 17).

Step 30

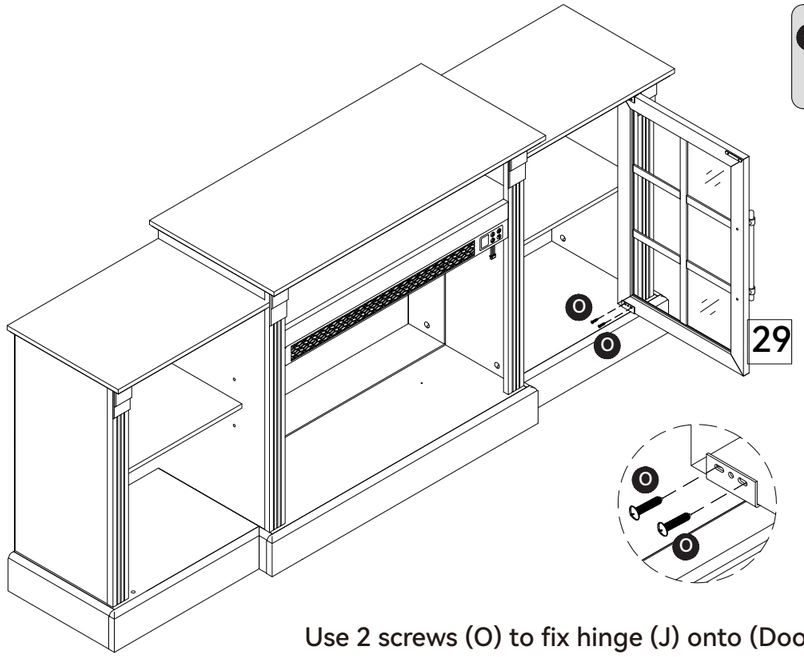

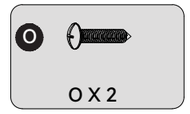

Use 2 screws (O) to fix hinge (J) onto (Door Panel 29).

Email : **service@grandtunnel.com**

EN

Step 31

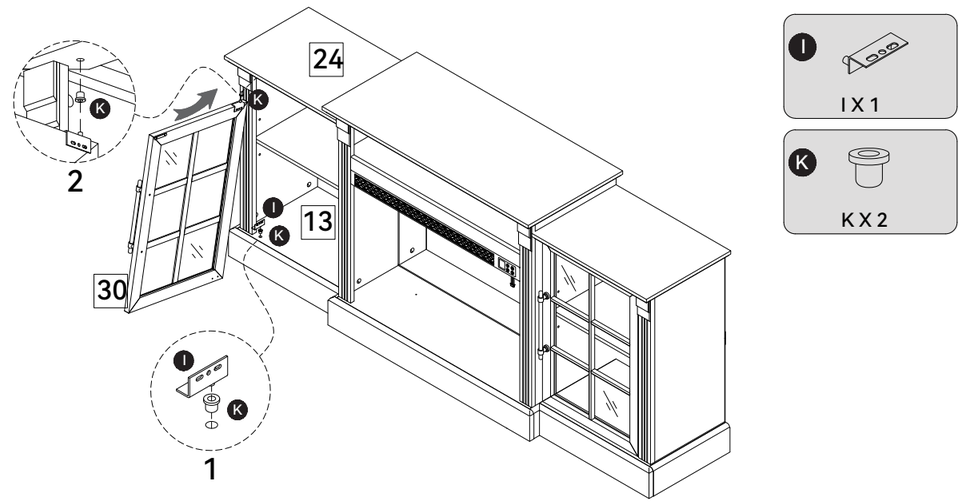

A. Insert 1 hinge sleeve (K) into the pre-drilled hole of (Bottom Panel 13).
B. Align the hinge (I) shaft with the installed hinge sleeve (K) and insert it.
C. Insert another hinge sleeve (K) into the hinge on (Door Panel 30), then align the shaft end with the hole on (Panel 24) and insert it.
D. Place the bottom of (Door Panel 30) onto the hinge base (I) on (Bottom Panel 13).

Step 32

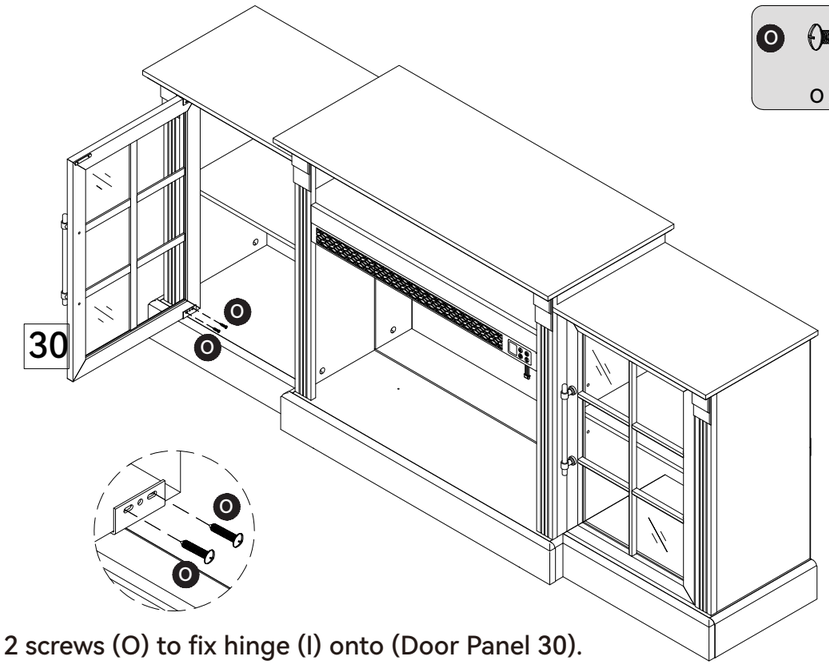

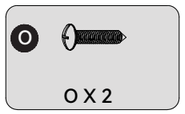

Use 2 screws (O) to fix hinge (I) onto (Door Panel 30).

Step 33

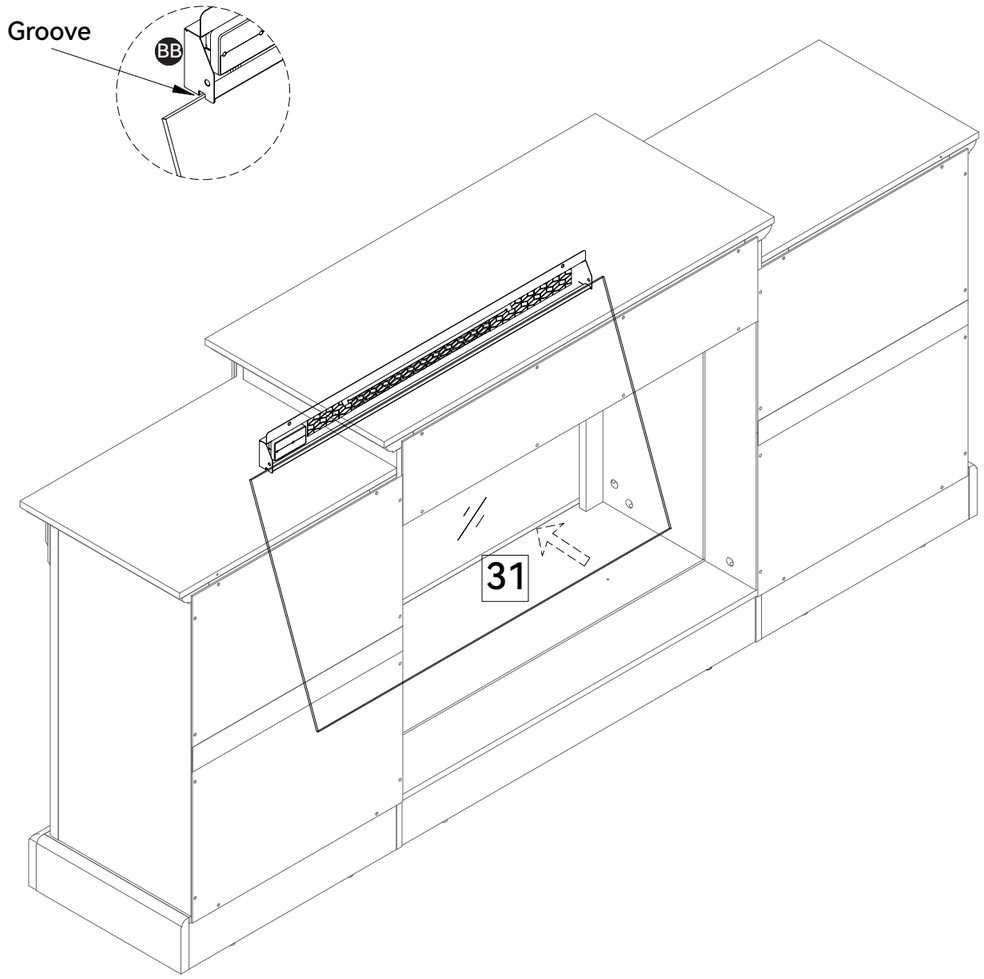

Align (Glass 31) with the groove of (Fireplace Frame BB), then push it forward into place.

Step 34

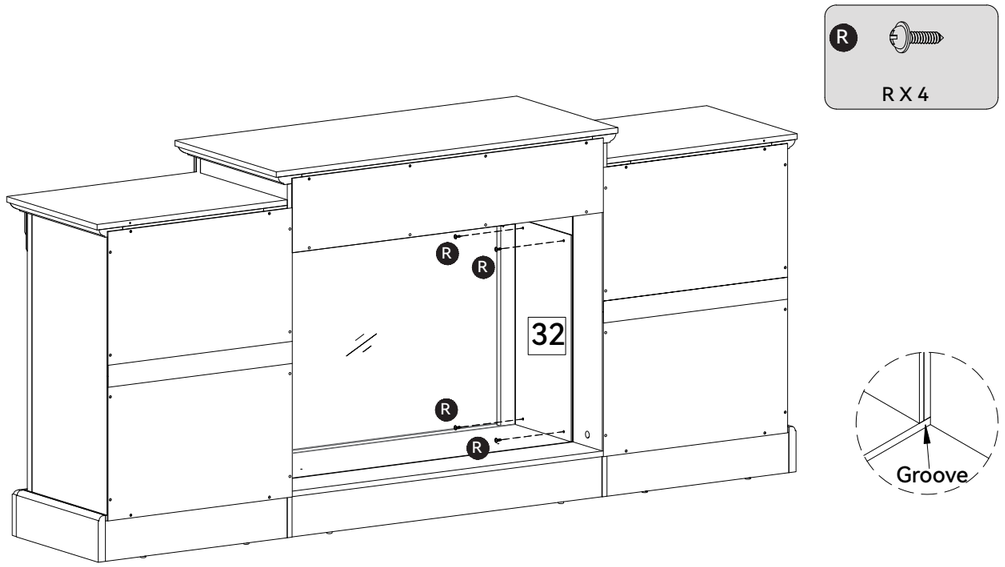

Position one side of (Fireplace Side Panel 32) against (Glass 31), align the other side with the groove, and use 4 screws (R) to fix it to the middle side panel.

Step 35

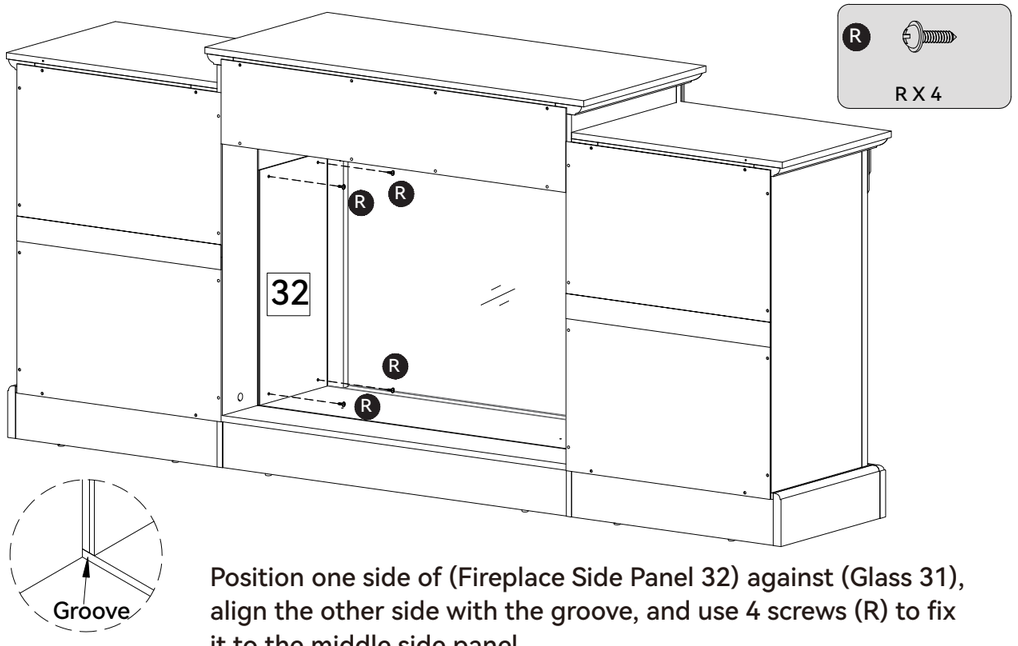

Position one side of (Fireplace Side Panel 32) against (Glass 31), align the other side with the groove, and use 4 screws (R) to fix it to the middle side panel.

Email : **service@grandtunnel.com**

EN

Step 36

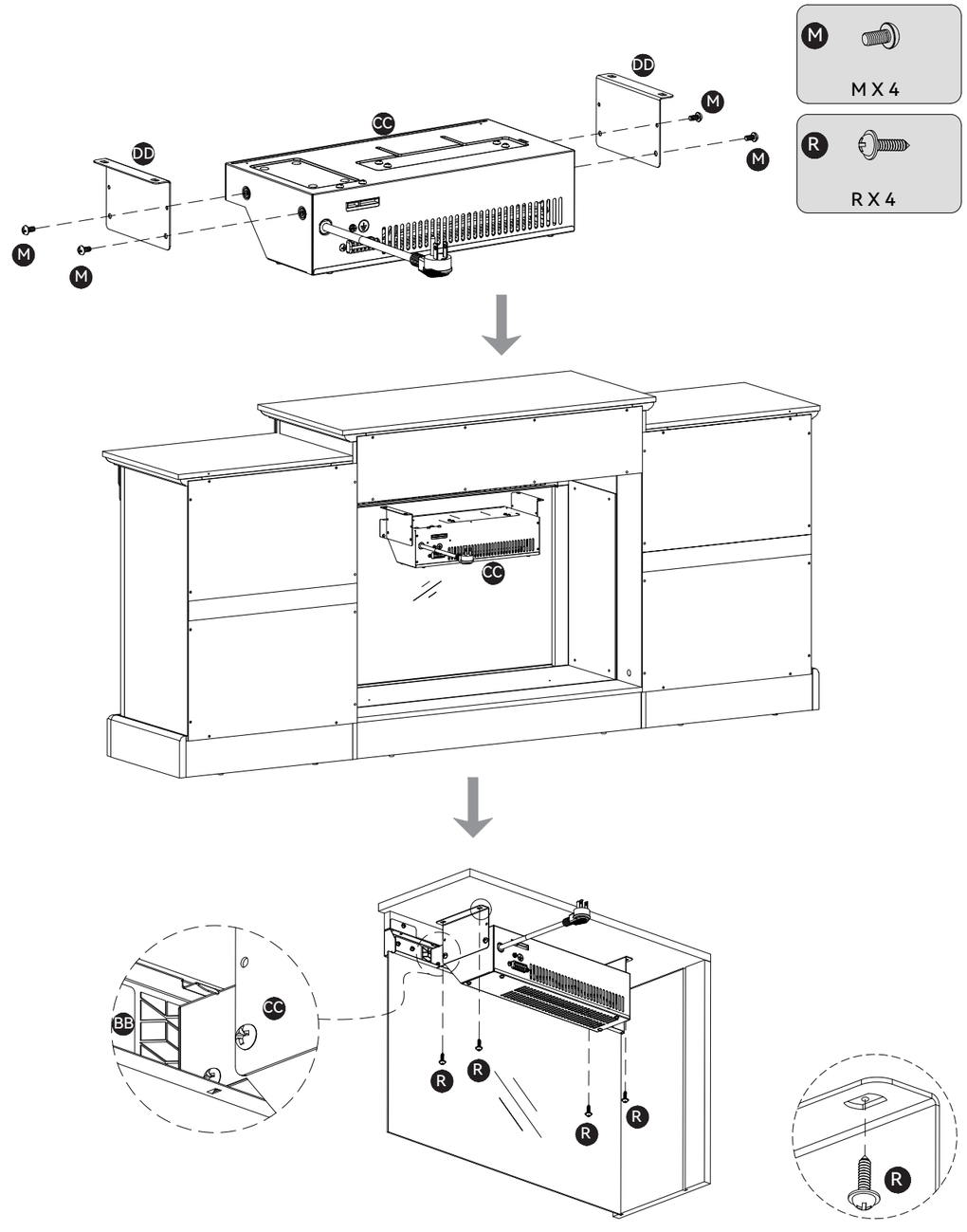

A. Use 4 screws (M) to fix the hanging bracket (DD) onto the fireplace core (CC).
B. Insert the front air outlet of the fireplace core assembly (CC) into (Fireplace Frame BB), then secure it with 4 screws (R).

Email : **service@grandtunnel.com**

Step 37

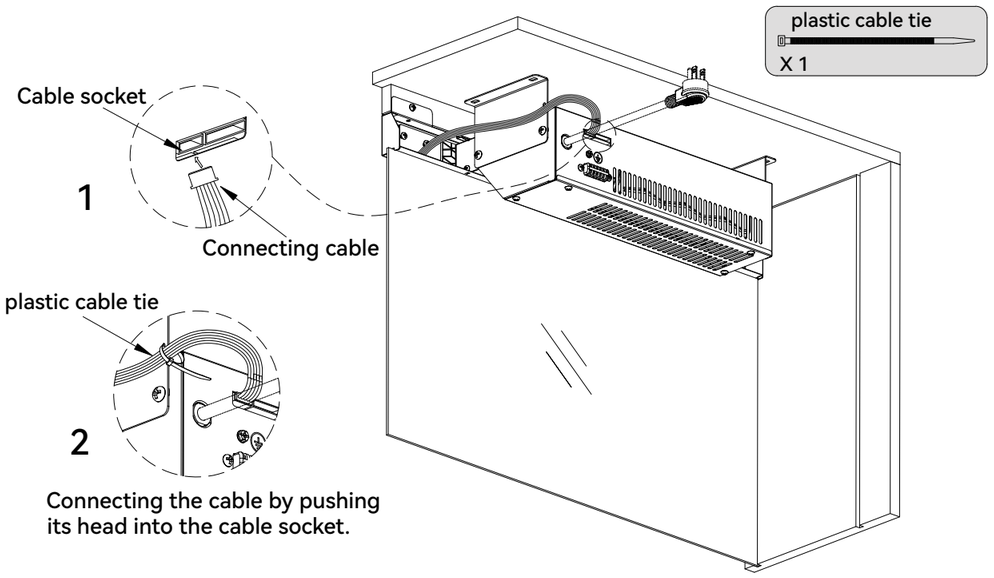

Insert the control panel cable from (Fireplace Frame BB) into the socket of (Fireplace Core CC), and secure it to the bracket (DD) with a cable tie.

Step 38

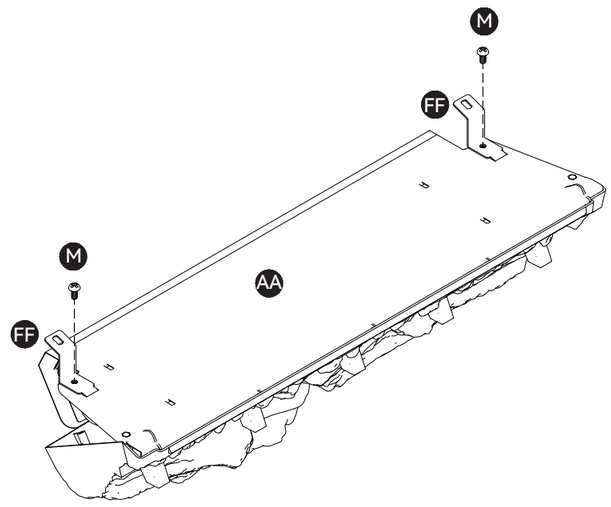





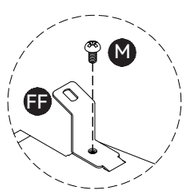

Insert 2 metal plates (FF) into the holes of the log set (AA), then use 2 screws (M) to fix them onto (AA).

Email : **service@grandtunnel.com**

Step 39

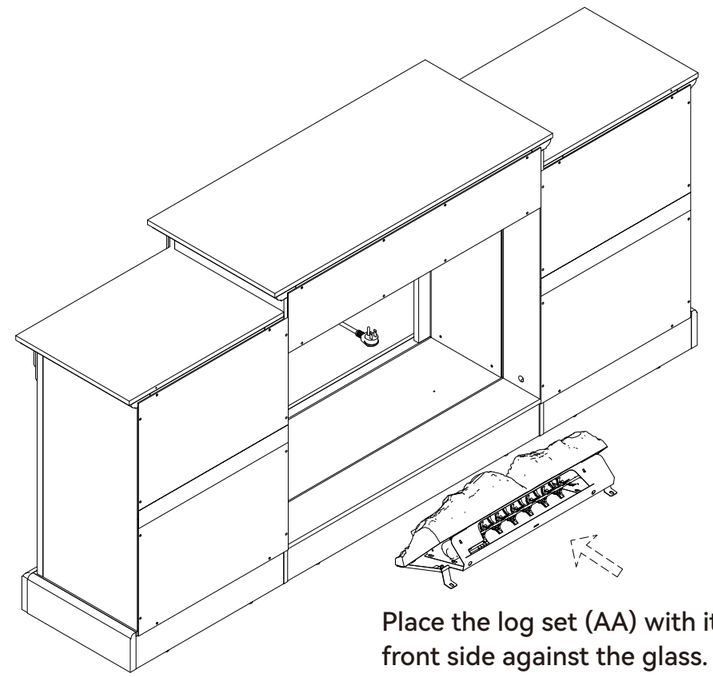

Place the log set (AA) with its front side against the glass.

Step 40

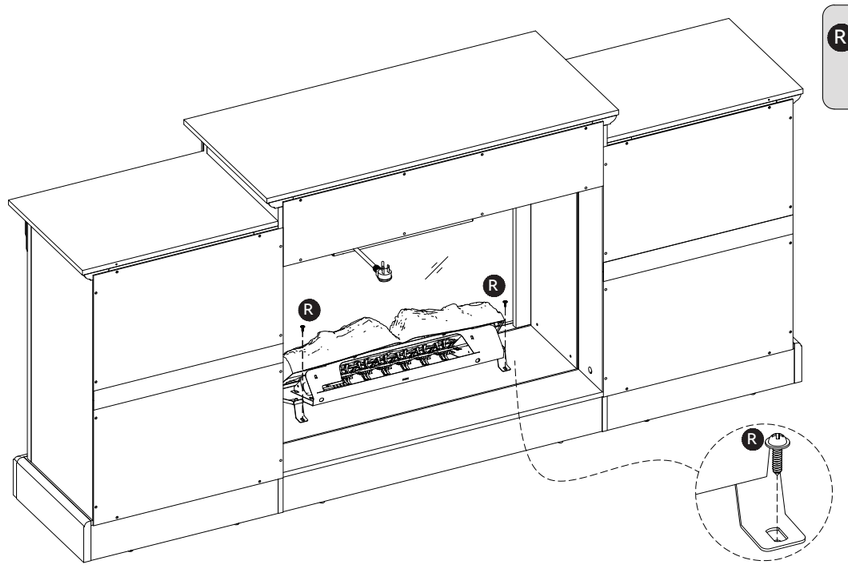

Use 2 screws (R) to secure the log set (AA) onto the bottom panel.

Email : **service@grandtunnel.com**

EN

Step 41

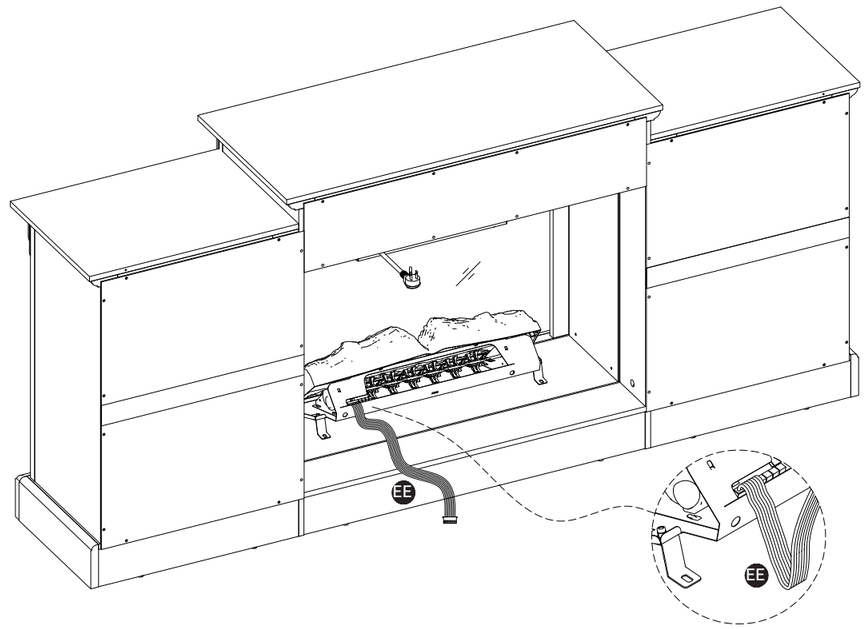

Insert the connecting wire (EE) into the socket of the log set (AA).

Step 42

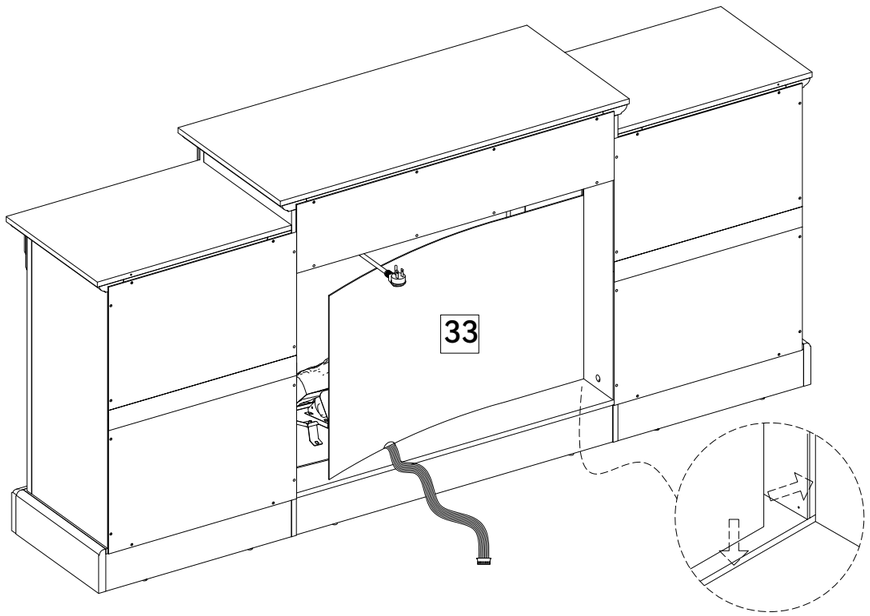

Insert one side of (Back Panel 33) into the slot at the back of the cabinet.

Email : **service@grandtunnel.com**

EN

Step 43

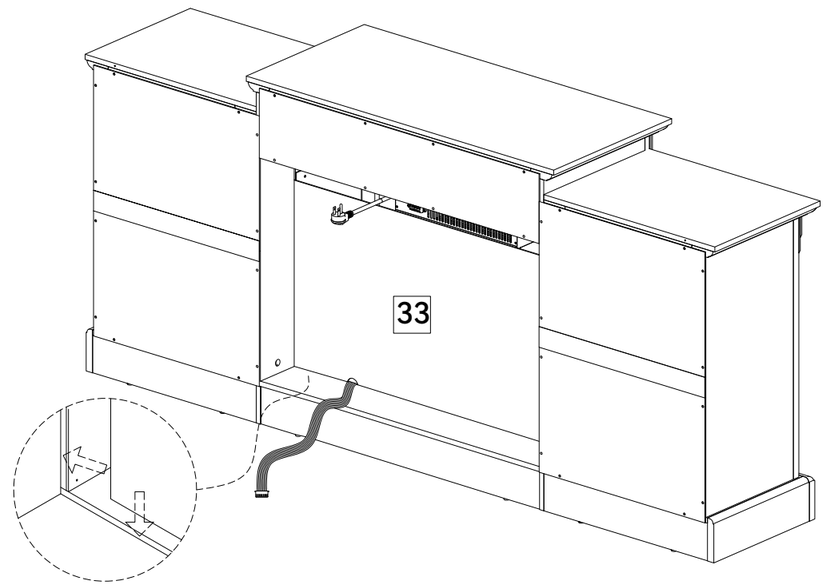

Gently bend (Back Panel 33), align the other side and insert it into the corresponding slot, then adjust until the edges are fully aligned.

Step 44

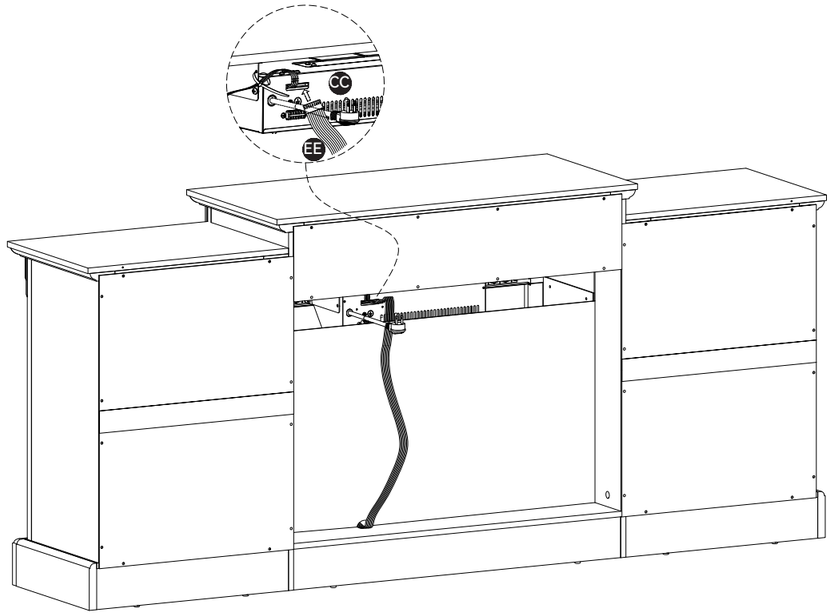

Insert the connecting wire (EE) into the socket of the fireplace core (CC).

Email : **service@grandtunnel.com**

Step 45

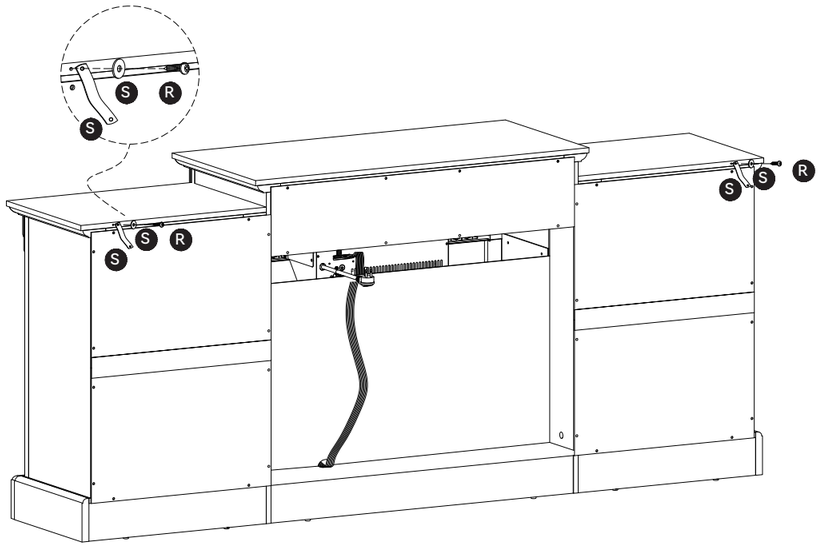

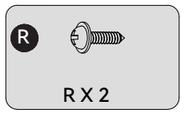

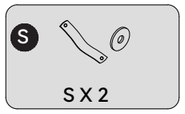

Use 2 screws (R) through the washer (S) to fix the anti-tip strap (S) onto the back panel.

Step 46

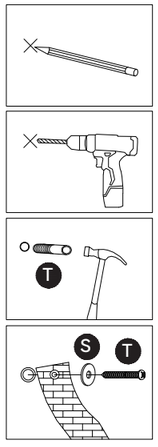

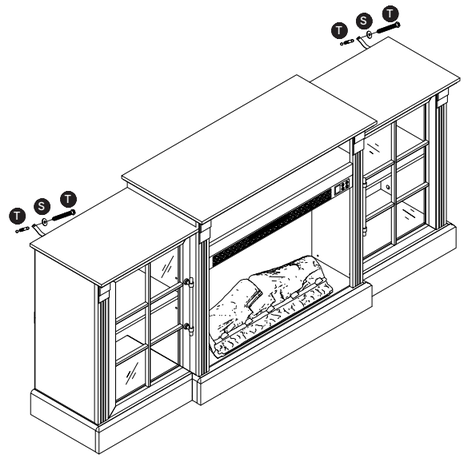

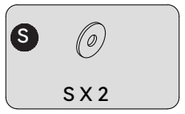

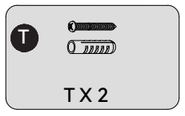

A. Place the cabinet in the desired position and mark the mounting holes of the anti-tip strap (S) on the wall.
B. Drill two holes (8 mm diameter, 40 mm depth) at the marked positions.
C. Insert the wall anchors (T) into the holes.
D. Use 2 screws (T) through the washer (S) to secure the anti-tip strap (S) to the wall to prevent tipping.

Email : **service@grandtunnel.com**

EN

USER MANUAL
Electric Fireplace

Model#SF231-28A

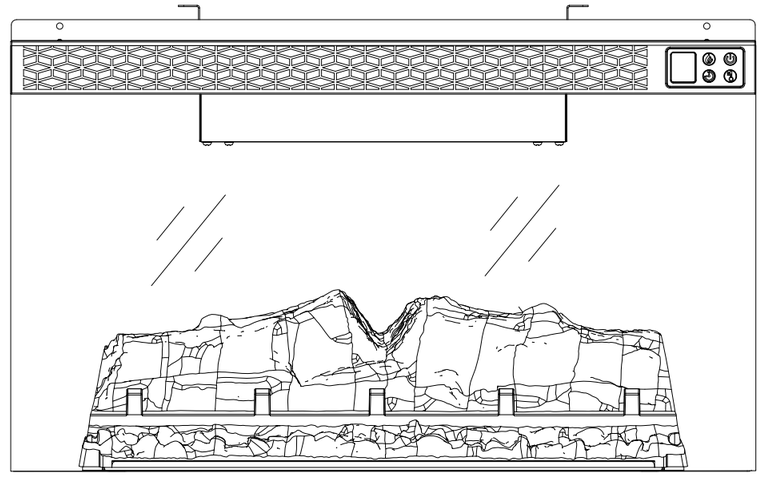

THIS INSTRUCTION BOOKLET CONTAINS IMPORTANT SAFETY INFORMATION.
PLEASE READ AND KEEP FOR FUTURE REFERENCE.

Email : **service@grandtunnel.com**

Safety Information

IMPORTANT SAFETY INFORMATION

PLEASE READ ALL OF THE INFORMATION IN THIS OPERATING MANUAL, INCLUDING ALL SAFETY,OPERATING,AND MAINTENANCE INFORMATION. TO AVOID THE POTENTIAL RISK OF FIRE,ELECTRIC SHOCK,OR INJURY TO PERSONS. USERS SHOULD FOLLOW THE DIRECTIONS AND WARNINGS IN THIS MANUAL.

- Read all instructions before using this heater.
- Do not use this heater outdoors.
- This heater is not intended for use in bathrooms, laundry areas and similar indoor locations. Never locate the heater where it may fall into a bathtub or other water container.
- Do not run the power cord under carpeting. Do not cover the power cord with throw rugs, runners, or the like.
- Arrange the power cord away from traffic areas and where it will not be tripped over.
- To disconnect the heater, turn controls to off, then remove the plug from the outlet.
- Connect to properly grounded outlets only. Always plug heaters directly into a wall outlet / receptacle. Never use with an extension cord or relocatable power tap (outlet / power strip).
- To prevent a possible fire, do not block firebox air intakes or the exhaust in any manner. Do not operate the firebox on soft surfaces, like a bed, where openings may become blocked.
- There is a thermostat limiter inside the heater. When the inner temperature over heats or abnormal heating occurs, the thermostat protective device cuts off the power supply to avoid fireplace damaged or risk of fire.
- Use this heater only as described in this manual. Any other use not recommended by the manufacturer may cause fire, electrical shock, or injury to persons.

SAVE THESE INSTRUCTIONS

WARNING

There are no user serviceable parts inside the fireplace/heater
If the unit appears to malfunction.
turn the unit off and unplug the unit from the wall immediately, and contact Customer.

WARNING

This heater is hot when in use . To avoid burns, do not let bare skin touch hot surfaces.
If provided, use handles when moving this heater, Keep combustible material,
such as furniture,pillows, bedding, papers, clothes and curtains
at least 3 f.t (0.9meters) from the front of the heater and keep them away from
the sides and rear.

WARNING

Extreme caution is necessary when any heater is used by or near children or invalids
and whenever the heater is left operating and unattended.

WARNING

Always unplug the heater when not in use .

WARNING

Do not operate any heater with a damaged cord or plug or
after the heater malfunctions,has been dropped or damaged in any manner.
Return the heater to an anthorized service facility for examination,
electrical or mechanical adjustment, or repair.

WARNING

Do not insert or allow foreign objects to enter any ventilation or exhaust openings
as this may cause an electric shock or fire, or damage the heater.

WARNING

Heater has hot and arching or sparking parts inside.
Do not use in areas where gasoline, paint, or flammable liquids are used or
stored.

WARNING

While the heater is in use, the top center of the fireplace can get hot to the touch
and may cause serious injury or burns.
Always supervise small children around the fireplace/heater.
Do not place any cloth or decorations over the heater outlet of the fireplace,
or otherwise obstruct the heater outlet of the fireplace,
as this may cause a fire and serious injury may result.

GROUNDING INSTRUCTIONS

DANGER

Improper connection of the equipment-grounding conductor can result in a risk of electric shock. Check with a qualified electrician or serviceman if you are in doubt as to whether the product is properly grounded. Do not modify the plug provided with the product. If it will not fit the outlet, have a proper outlet installed by a qualified electrician.

- This product must be grounded. If it should malfunction or breakdown, grounding provides a path of least resistance for electric current to reduce the risk of electric shock. This product is equipped with a cord having an equipment-grounding conductor and a grounding plug. The plug must be plugged into an appropriate outlet that is properly installed and grounded in accordance with all local codes and ordinances.
- This heater is for use on120-volt circuits and has a grounded plug. An adapter is available from your local electronics store or online supplier for connecting three-blade grounding-type plugs to two-slot receptacles. The green grounding lug extending from the adapter must be connected to a permanent ground such as a properly grounded outlet box. The adapter should not be used if a three-slot grounded receptacle is available.

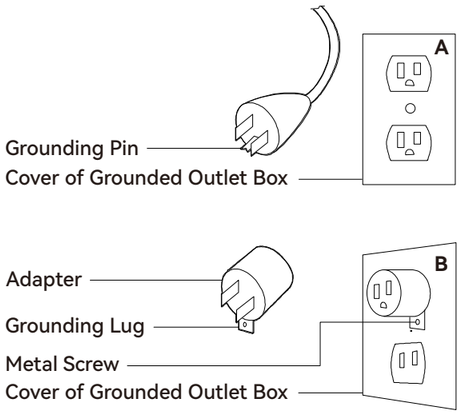

TECHNICAL SPECIFICATION

Power Rating	1400W
Voltage	120V
Frequency	60Hz

Email : **service@grandtunnel.com**

Operation

Identifying the control panel

- The control panel is located on the top right corner of the fireplace/heater unit.
- The control panel contains the display unit (1), function indicator (2), timer function (3),heater control (4), flames control (5), and main power(6).
- The display unit (1) displays information about the flame level, time, and current temperature.

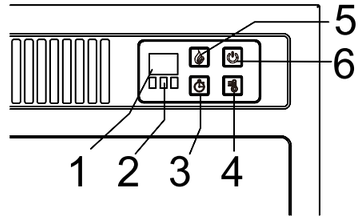

Understanding the function indicator

- The function indicator (2) has three square LEDS - red, green,and blue.The red LED indicates that the Fahrenheit temperature heating function is running, the green LED indicates that the Celsius temperature heating function is running, and the blue LED indicates that the timer function is engaged.
- To the bottom of the three LEDS, is the infrared receiver module which communicates with the remote control to control the heater.

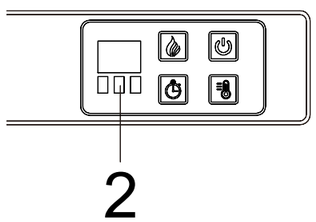

Email : **service@grandtunnel.com**

Using the timer function

The timer button (3) allows you to set the amount of time you want the fireplace / heater to run. The timer button (3) operates both the flames and the heater function. if the heater is operating when the timer is set, then the heater is on the timer. if the flames are operating, then the timer will control the flames. if both the heater and flamese operating with the timer set ,then the timer controls both the flames and the heater. Pressing the button in sequence will set the timer for a set interval. This interval period is shown in the display (1), in blue. The set intervals are displayed in this table. The timer interval is set from the time the interval is selected.There is no clock function for turning the heater or flames on or off at a specific time.

Button Press	Timer Interval
1st press	30 Minutes
2nd press	1 Hour
3rd press	2 Hours
4th press	3 Hours
5th press	4 Hours
6th press	5 Hours
7th press	6 Hours
8th press	OFF

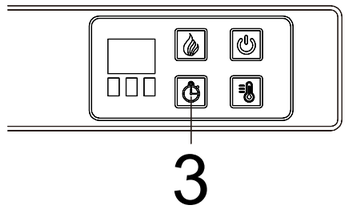

Using the heater control

1. Press the heater on/off button(4) to turn on the heating function. When turn it on, the heater will keep in "ON" mode automatically.
2. When the heater is on, long press the heater button for 5 seconds to enter the temperature setting adjustment. The LCD screen(1) will start flashing.
3. Press the heater button to cycle through the temperature level.
4. After choosing your heat level, wait for the LCD screen(1) to flash 2 times. Your temperature is now set.
5. With the heater on, gently press and hold the main power button for 5 seconds to enter temperature converting mode, Conversion between Fahrenheit and Celsius.

Note: The heater will automatically pause afer reaching the set temperature in your room, If the heater control is set to "ON" the heater will work nonstop until you shut it off manually.

Botton Press	Celsius Temperature
1	17℃
2	18℃
3	···
···	21℃
6	22℃
7	23℃
8	···
···	26℃
11	27℃
12	ON

Botton Press	Fahrenheit Temperature
1	62°F
2	63°F
3	64°F
···	···
11	72°F
12	73°F
13	74°F
···	···
20	81°F
21	82°F
22	ON

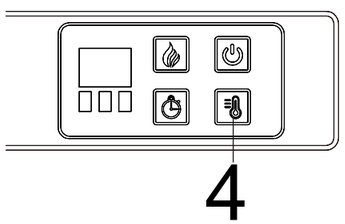

Email : **service@grandtunnel.com**

EN

Using the flame contol

Press the flame control button (5) manually set flame color. The flame color settings are as follows:

Button Press	Display Value	Flame Appearance	Button Press	Display Value	Flame Appearance
1st press	L1	Orange	5th Press	L5	Red&Orange
2nd press	L2	Blue	6th Press	L6	Red&Orange&Blue
3rd press	L3	Red	7th Press	L7	Cycle
4th press	L4	Red&Blue			

Brightness Control

Long press the flame button(5) for approximate 3 seconds to control the brightness of the flame display. The brightness settingare as follows:

Display	Actual Brighiness
b5	Brightest
b4	Bright
b3	Medium
b2	Slightly Darker
b1	Darker

NOTE: Flame brightness is set to 100% by default.

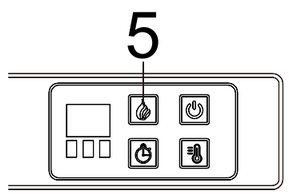

Using the main power button

- Press the power button(6) to turn the fireplace / heater unit on and off.
  Press the power button (6) once to turn the unit on. Press again to turn the unit off.

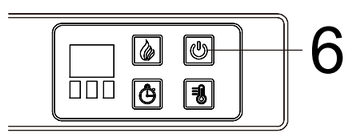

Email : **service@grandtunnel.com**

Using the Remote Control

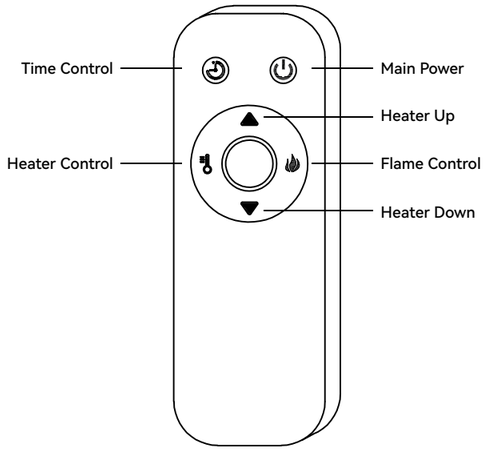

Using the Remote control

The operation of the remote control buttons work the same as button on the control panel.

NOTE: The remote control cannot be used to switch between degree Fahrenheit and degree Celsius.

Install the battery
For replacement batteries, use AAA batteries.

Press down and slide back cover off the battery compartment.

Insert two provided AAA batteries into the battery compartment making sure that the ends of the batteries with the negative(-) symbols are against the springs in the battery compartment.

Replace the battery compartment cover, making sure it snaps into position.

WARNING Do not ingest batteries.

Non-rechargeable batteries are not to be recharged.

Batteries are to be inserted with the correct polarity.

Exhausted batteries are to be removed from the product.

Always purchase the correct size and grade of battery most suitable for the intended use.

Replace all batteries of a set at the same time.

Clean the battery contacts and also those of the device prior to battery installation.

Remove batteries from equipment when not used for an extended period of time.

NOTE:
Battery disposal
Please always dispose of batteries at a suitable recycling point.

Maintenance and Care

WARNING Always disconnect from the power supply before cleaning the heater.
First turn off the main power.
Then remove the electrical plug from the wall outlet.

WARNING Do not use this fireplace insert if any part of it has been under water.
Immediately call a qualified service technician to inspect the firebox and replace any part of the electrical system which has been underwater.

- The blower motor and flame motor are pre-lubricated for a durable using time and need no further lubrication or maintenance. To remove any accumulation of dust or debris, the soft brush attachment of a vacuum cleaner should occasionally be used to clean the outlet grille of the fan heater.
- Use a soft, clean cloth that will not scratch the surface when dusting.
- Use a clean soft cloth dampened with warm water to clean the fireplace surface.
- Do not use household or abrasive cleaners, as these products may damage the surface.
- When cleaning the glass viewing screen use a non-abrasive damp cloth with liquid cleaner or soft soap if necessary; Don NOT use cleaning powders or any other substance with abrasives since these substances will scratch glass.
- Under no circumstances should this product be operated with a broken or chipped glass panel.
- Do not strike or slam the glass.
- In the event that your appliance is stained or otherwise damaged during use, we recommend that you call a professional to it.
- When not in use please unplug the cord from the outlet to prevent any damage or accidents.

Troubleshooting

Problem	Solution
The unit does not turn on.	Check that the unit is fully plugged into a standard 120V outlet. Press the power button on the control panel.
Flame effect is on, but there is no flame effect.	Open the top and back panels to check if the flame spindle has fallen off from the spindle motor.
The heater does not blow warm air.	Make sure the set temperature is higher than the room temperature.
The heater does not work.	Turn all switches to the "OFF" position and unplug the unit from the wall outlet for 5 minutes. After 5 minutes plug the unit back into the wall outlet, and operate as normal.
Remote control does not work.	Use it closer to the unit / change battery.

Email : **service@grandtunnel.com**