Cabinet

Assembly Instruction - Please keep properly for future reference.

If you find any missing boxes, damaged parts, or accessory shortages, please contact the customer service team of your purchasing channel immediately. We will resolve the issue as quickly as possible.

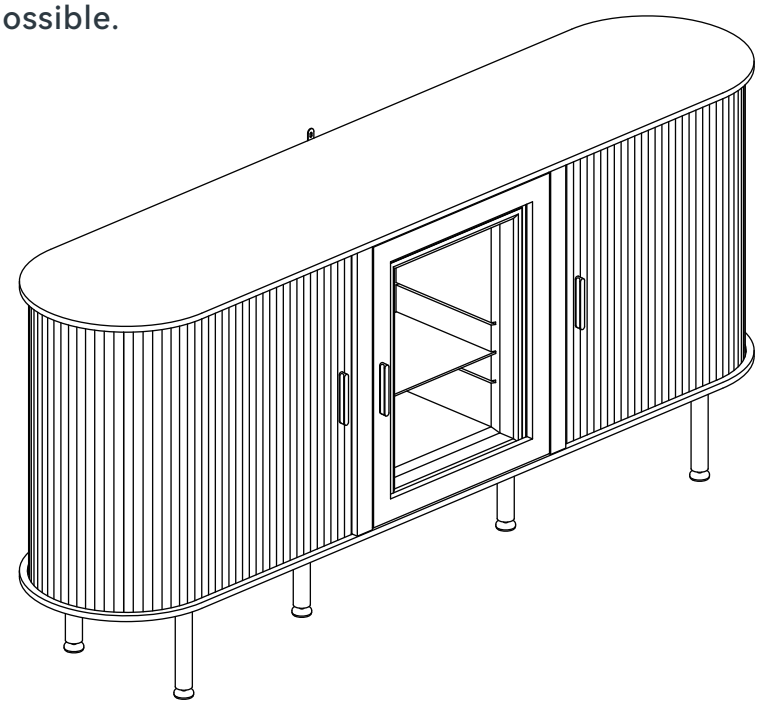

Dimensions

Width-70 inch
Depth-15.7 inch
Height-31.9 inch

EN

THE FOLLOWING INFORMATION:

- Order number
- Purchase platform
- Purchase date
- Detailed description of the issue along with photos (if applicable)

Important – Please read these instructions carefully before starting the installation.

Safety and Care Advice

Important – Please read these instructions fully before starting assembly

- Check you have all the components and tools listed on the following pages.
- Remove all fittings from the plastic bags and separate them into their groups.
- Keep children and animals away from the work area, small parts could choke if swallowed.
- Make sure you have enough space to layout the parts before starting.
- During assembly do not stand or put weight on the product, this could cause damage.
- Assemble the item as close to its final position (in the same room) as possible.
- Assemble on a soft level surface to avoid damaging the unit or your floor.
- Parts of the assembly will be easier with 2 people.

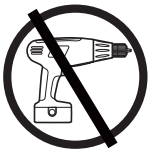

- To reduce the likelihood of damaging your product please ensure that your power drill is set on a low torque setting.

Care and maintenance

- Only clean using a damp cloth and mild detergent, do no use bleach or abrasive cleaners.
- From time to time check that there are no loose screws on this unit.
- This product should not be discarded with household waste. Take to your local authority waste disposal centre.

Handy Hints

- Assemble all parts and bolts loosely during assembly, only once the product is comKlete should you fully tighten the bolts
- Regularly check and ensure that all bolts and fittings are tightened properly .

WARNING
In order to help prevent overturning – please follow these instructions

To help prevent product toppling over please follow the below steps:-

Use the anti tip stap or wall fixing method provided (if applicable)
Do not allow children to climb or hang on the furniture
Do not open more than one drawer at a time
Do not place heavy items in the top drawers
Do not place heavy items on top of the furniture, unless the furniture has been designed for this purpose

Please note that only the anti tip strap is provided.
You will need to provide wall plugs and screws applicable for your wall type

CUSTOMER SERVICE GUIDE

Thank you for choosing our product! We are committed to providing you with excellent service. If you find any missing parts, damaged packaging, or product damage after receiving all packages, please follow the steps below to quickly contact our customer service team. We will do our best to resolve your issue.

1. Missing Parts

Verify Parts:

1. Refer to the “Parts List” in the manual to verify the name, specifications, and quantity of the missing parts.
2. Take a clear photo of the parts list and mark the missing parts with detailed information, e.g., “Missing 5 pieces of M6x30mm screws.”

Contact Us:

· A description of the missing parts and a photo of the parts list.
· Order details (order number, purchase platform, purchase date).

2. Product or Packaging Damage

If it affects normal use:

Steps:

Take clear photos or videos showing the damaged parts and the extent of the damage (multi-angle shots are recommended).

Resolution:

After verification, we will arrange for a replacement part, product exchange, or refund as quickly as possible.

If it does not affect normal use:

Steps:

Provide a description of the damage and include relevant photos or videos.

Resolution:

We will provide repair guidance or an appropriate compensation plan based on the specific situation.

Helpful Tips

To process your issue efficiently, please prepare the following information:
· Order details (order number, purchase platform, purchase date).
· Clear photos or videos.
· We are committed to providing quick and professional solutions, no matter the size of the issue, to ensure your satisfaction.
Thank you for your trust and support! We hope you enjoy using our product!

Componets - Fittings

Please check you have all the fittings listed below

Note: The quantities below are the correct amount to complete the assembly. In some cases more fittings may be supplied are required.

A  6*30mm Wooden Dowel x 34	B 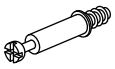 6*35mm Cam Bolt x 24	C  Cam Lock x 24
D 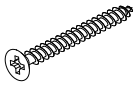 4*40mm Screw x 10	E  4*12mm Screw x 24	F 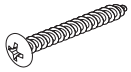 4*35mm Screw x 2
G  4*16mm Bolt x 2	H  4*10mm Bolt x 4	I 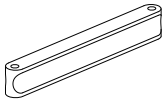 x 3
J 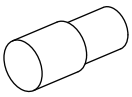 x 8	K 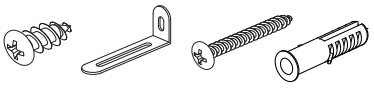 x 1	L 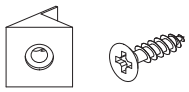 x 8

Tools required

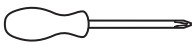

Phllips screwdriver
(medium & large)

Ruler - Use this ruler to help correctly identify the screws mm

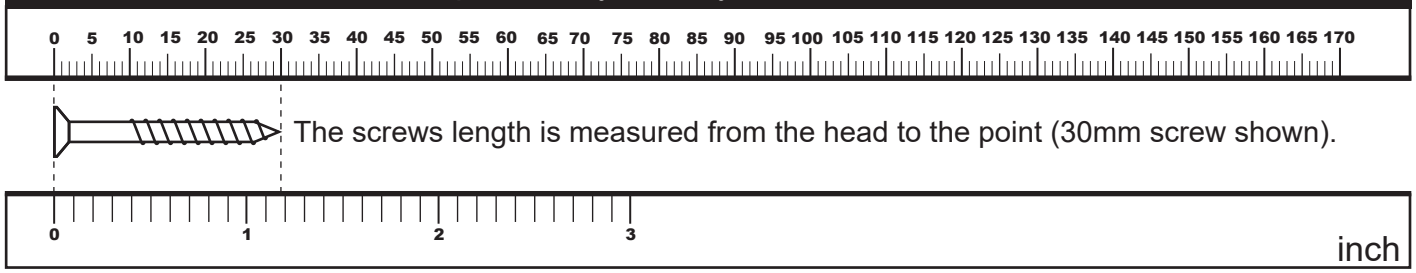

Using Camlocks

Step 1

Connect the male camlock as directed in the assembly instructions using a screwdriver.

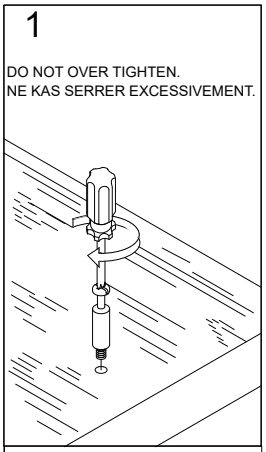

Step 2

Push the male camlock into the entry hole.

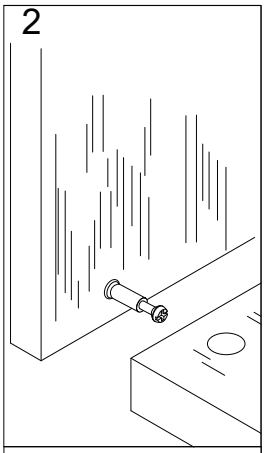

Step 3

Insert the female camlock as shown in the instructions.

Note: ensure that the arrow on the top of the camlock points towards the entry hole for the male camlock.

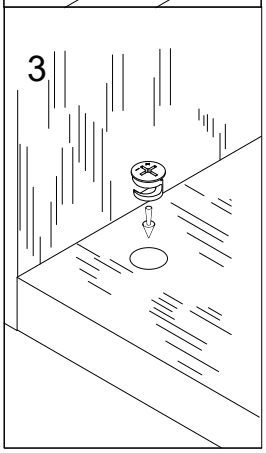

Step 4

Turn the female camlock clockwise with a screwdriver.

You should feel a click when the camlock is locked in place.

The joint is now secure.

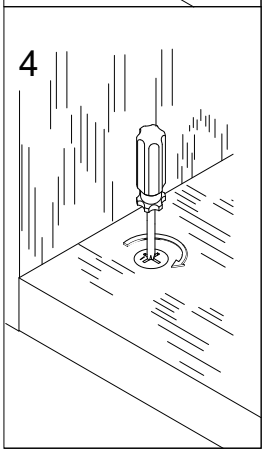

Componets - Panels

Please check you have all the panels listed below

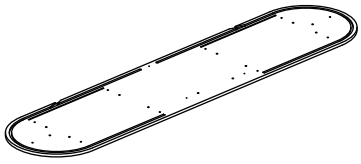

1 (1780*400*12mm x1)

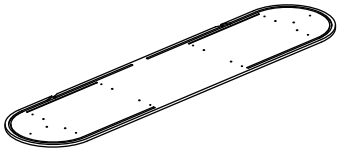

2 (1780*400*12mm x1)

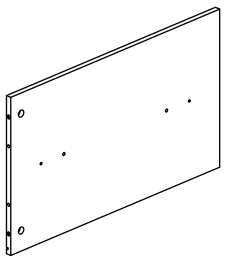

3 (586*346*12mm x1)

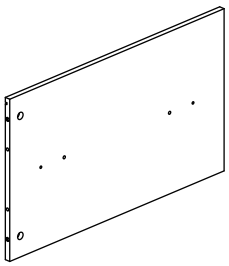

4 (586*346*12mm x1)

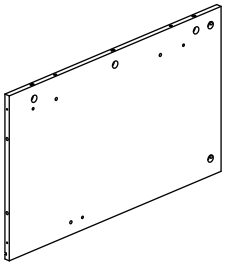

5 (586*356*12mm x1)

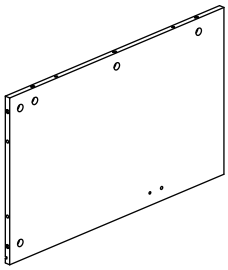

6 (586*356*12mm x1)

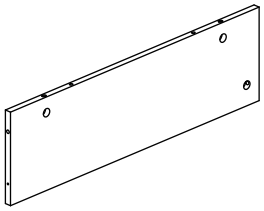

7 (586*170*12mm x1)

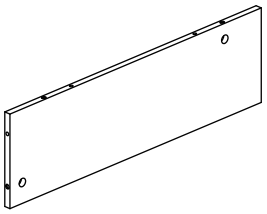

8 (586*170*12mm x1)

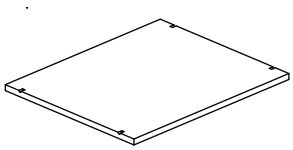

9 (404*331*12mm x2)

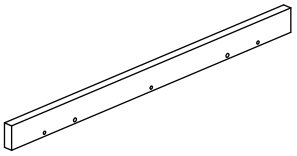

10 (586*40*15mm x1)

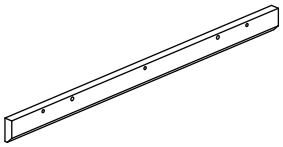

11 (586*40*15mm x1)

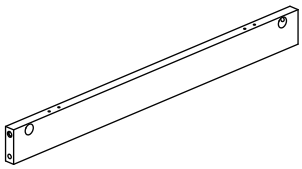

12 (528*50*15mm x1)

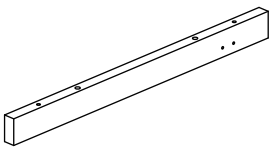

13 (416*34*15mm x1)

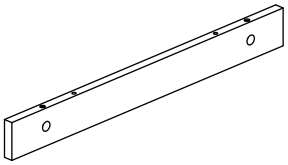

14 (552*60*15mm x1)

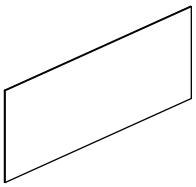

15 (593*408*3mm x2)

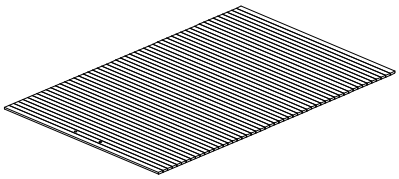

16 (918*595*6mm x2)

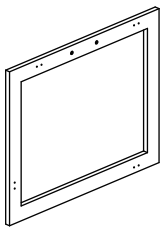

17 (580*466*12mm x1)

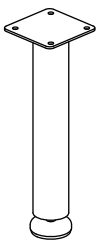

18 (200*32*32mm x6)

Assembly Instructions

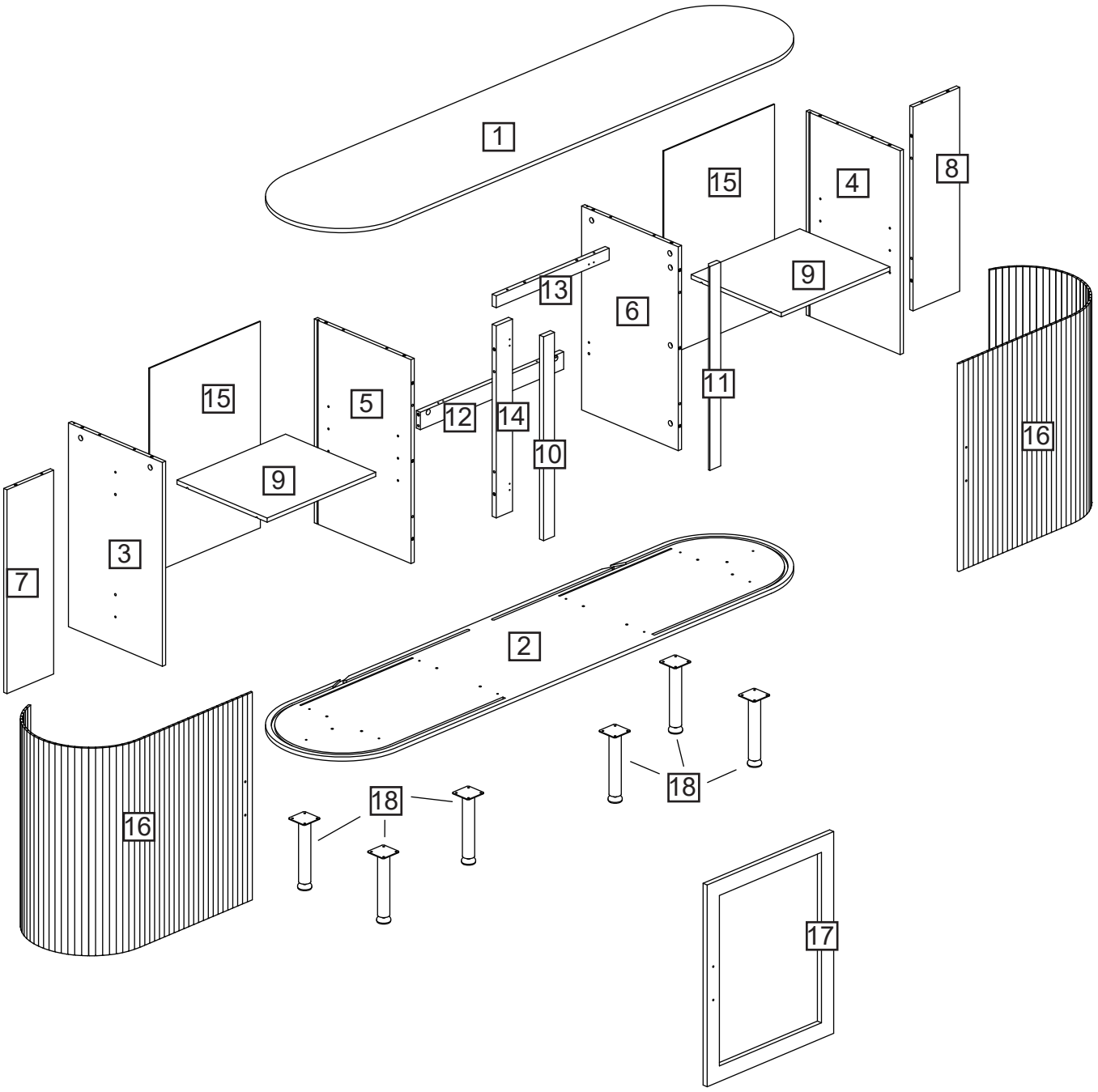

Assembly Instructions

Step 1

B x6



CAM-LOCK
Tighten until shoulder is flush
with panel.Do not overtighten
or undertighten(see example below)

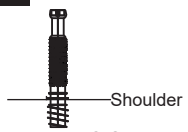

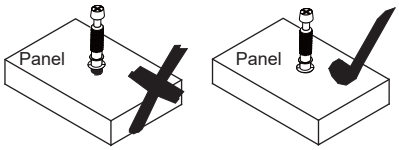

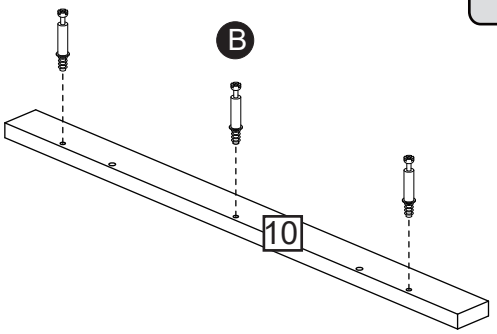

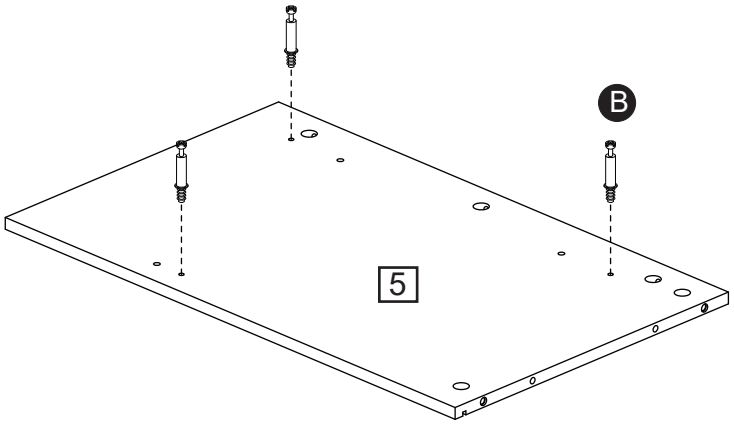

Secure the screw (B) separately at Part (5) and Part (10).

Step 2

Use the wooden stick (A) and the pulley (C) to connect Part (5) and Part (10) and secure it.

A x2



6x30mm

C x3



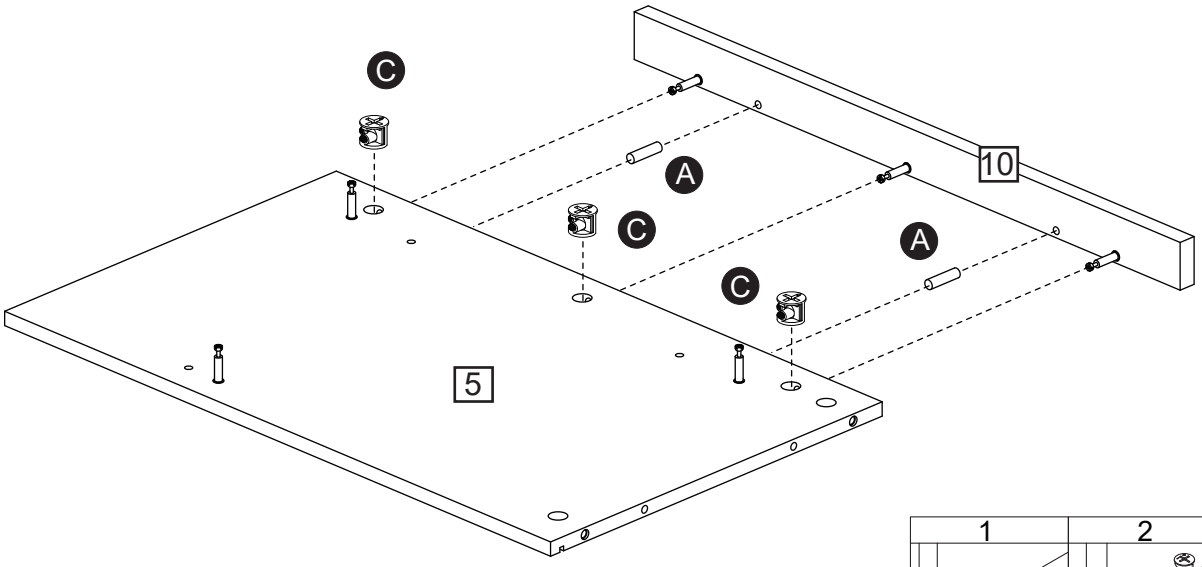

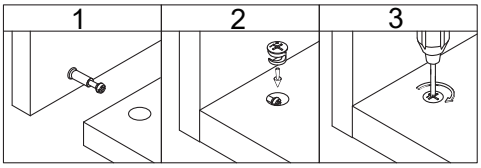

Assembly Instructions

Step 3

CAM-LOCK
Tighten until shoulder is flush
with panel.Do not overtighten
or undertighten(see example below)

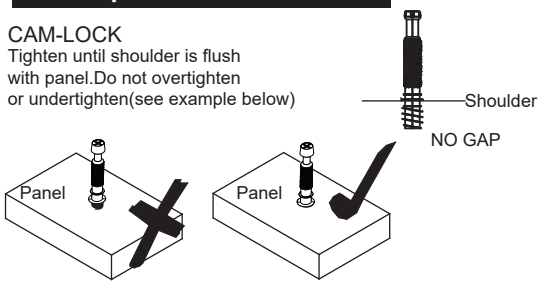

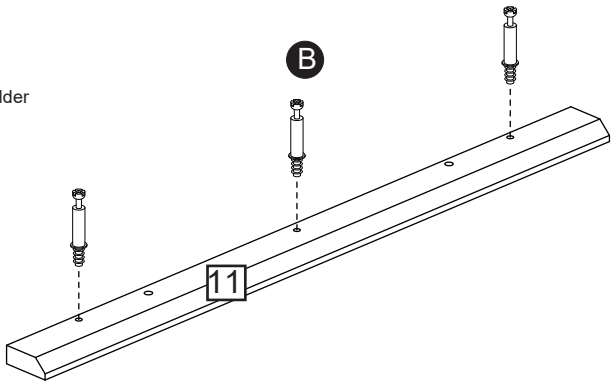

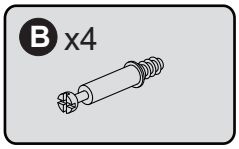

Secure the screw (B) separately at Part (6) and Part (11).

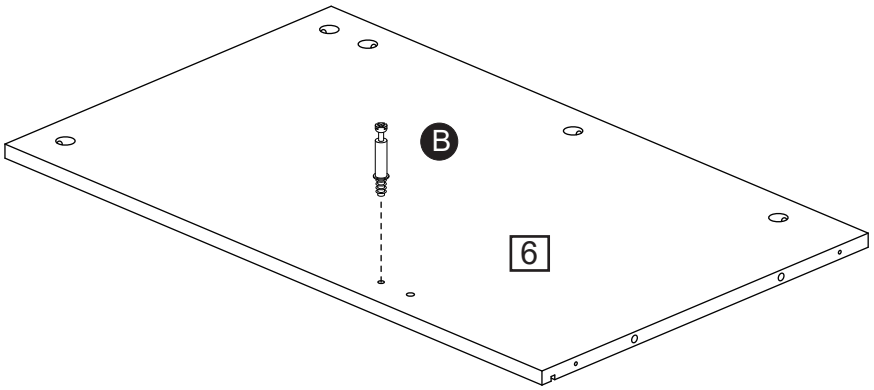

Step 4

Use the wooden stick (A) and pulley (C) to connect Part (6) and Part (11).

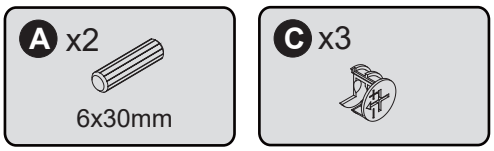

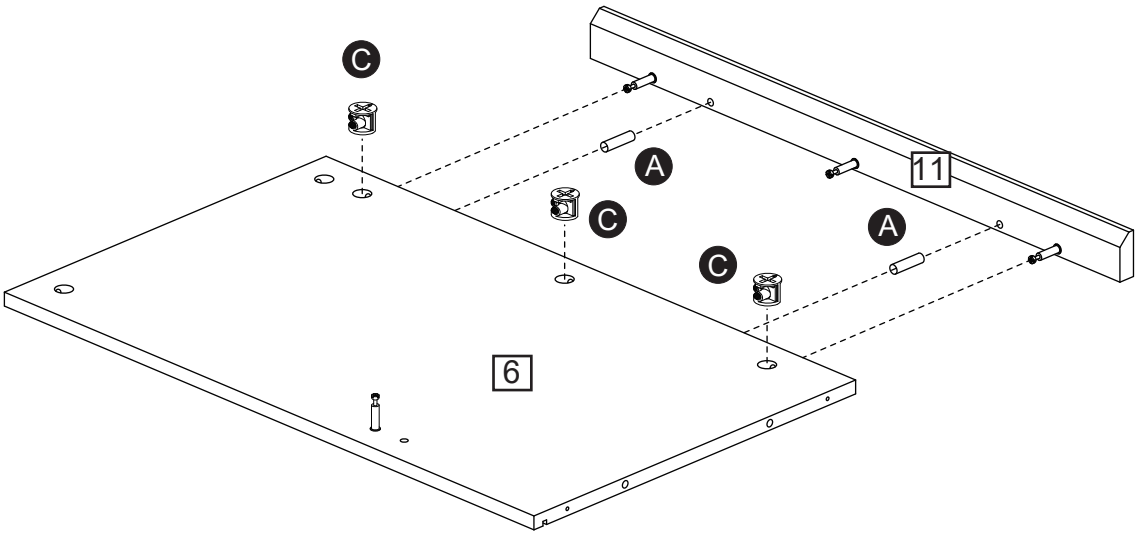

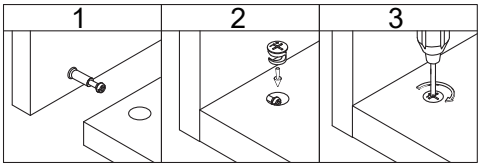

Assembly Instructions

Step 5

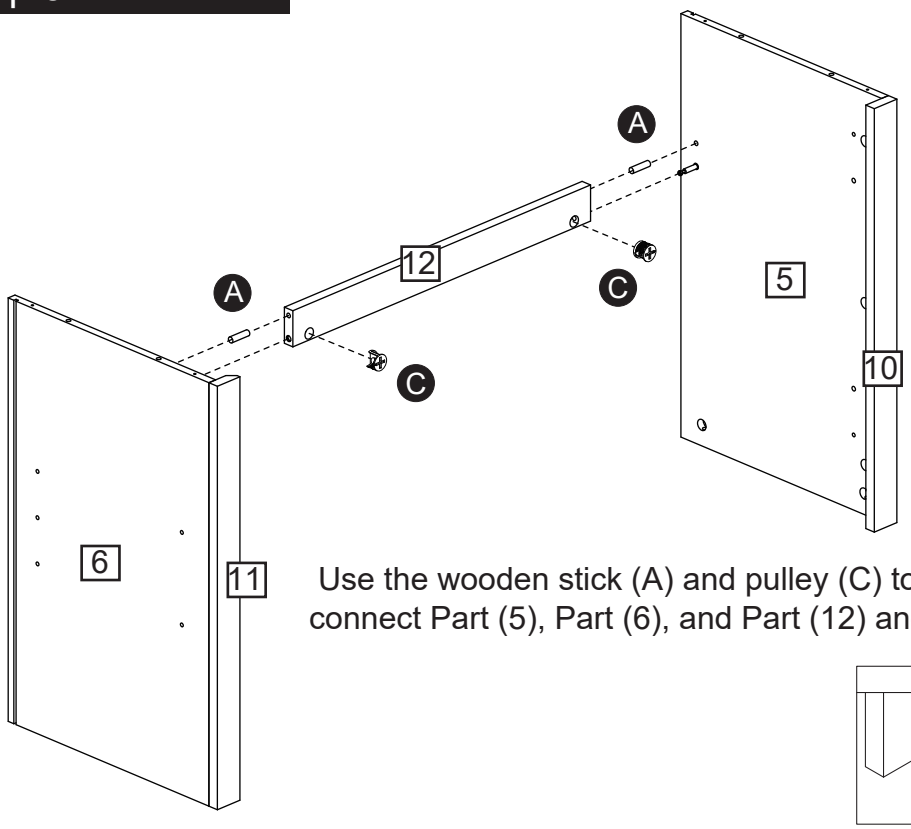

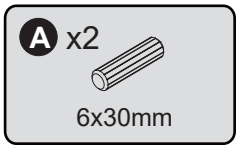

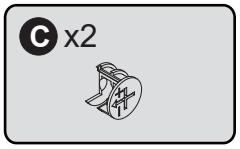

Use the wooden stick (A) and pulley (C) to connect Part (5), Part (6), and Part (12) and secure it.

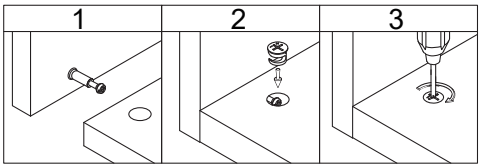

Step 6

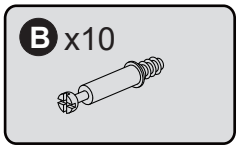

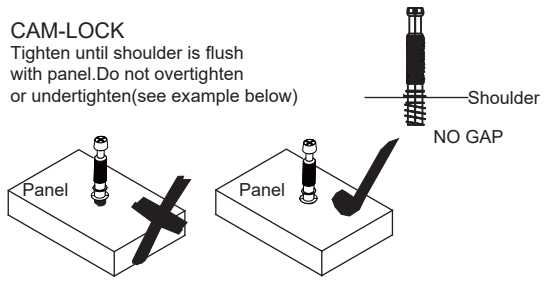

Secure the screw (B) at Part (1).

Assembly Instructions

Step 7

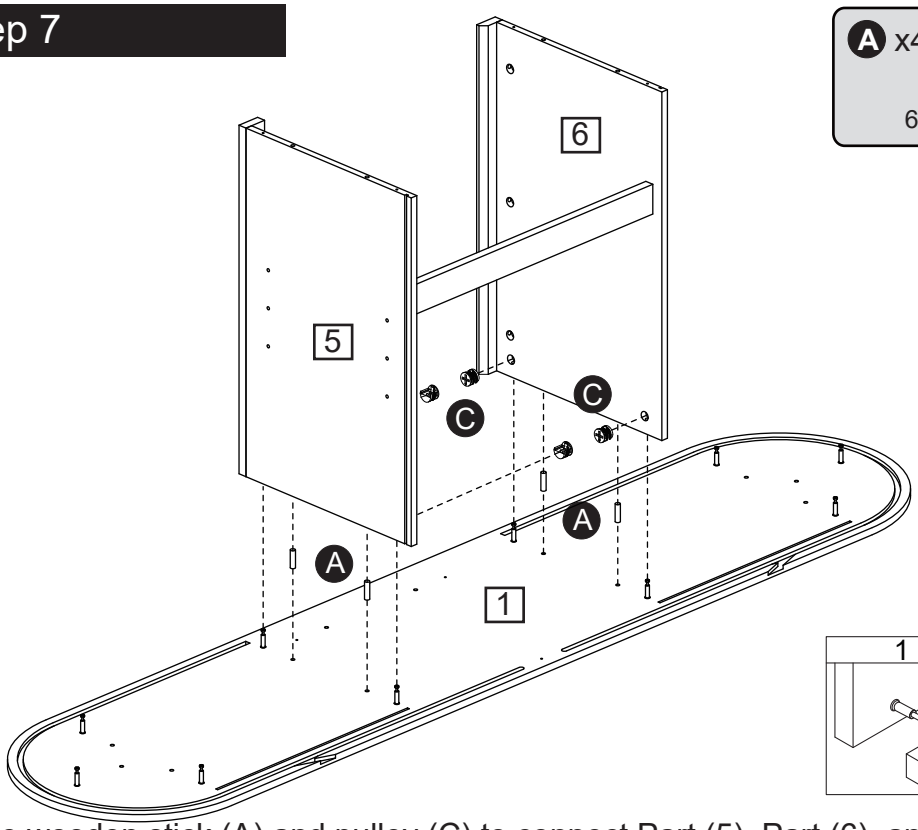

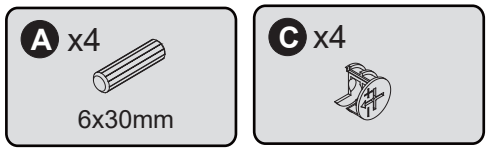

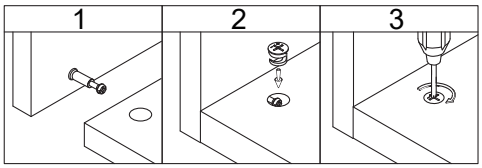

Use the wooden stick (A) and pulley (C) to connect Part (5), Part (6), and Part (1) and secure it.

Step 8

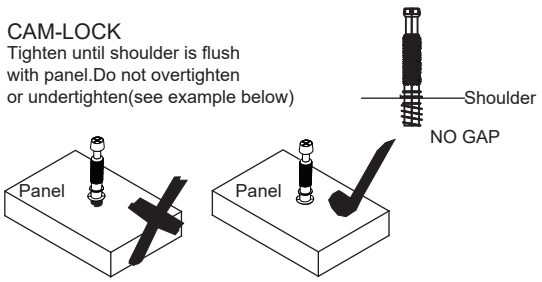

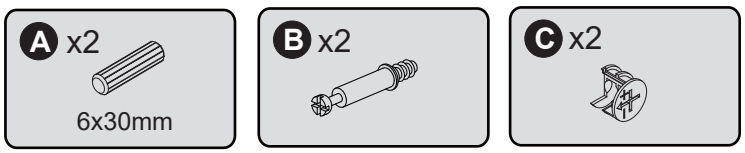

Use the wooden stick (A) and pulley (C) to secure Part (7) and Part (3) and secure it.

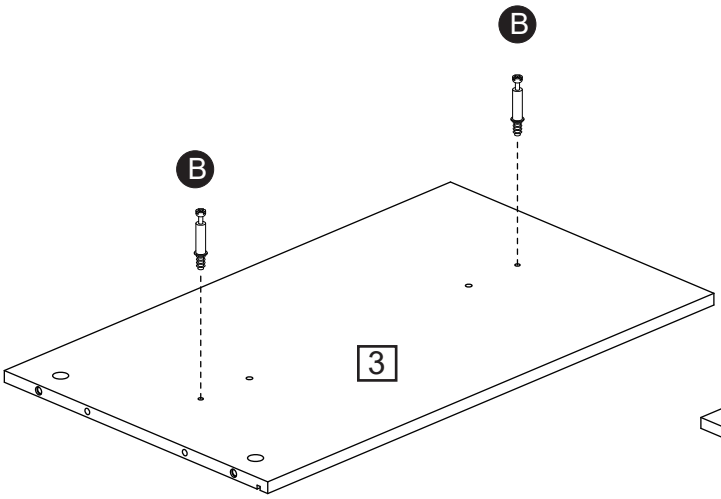

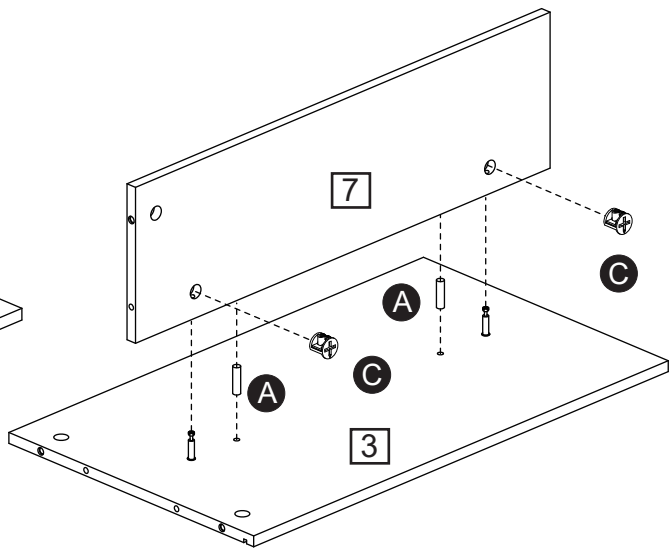

Secure the screw (B) at Part (3).

Assembly Instructions

Step 9

CAM-LOCK
Tighten until shoulder is flush
with panel.Do not overtighten
or undertighten(see example below)

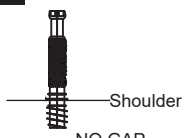

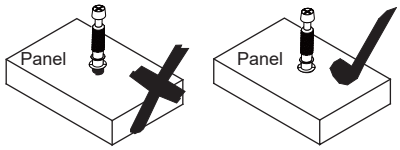

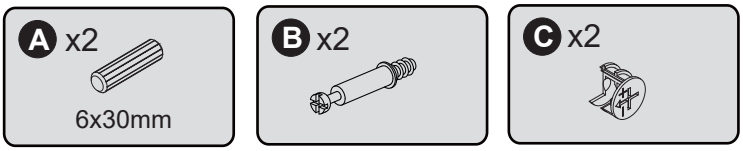

Use the wooden stick (A) and pulley (C) to secure Part (8) and Part (4) and secure it.

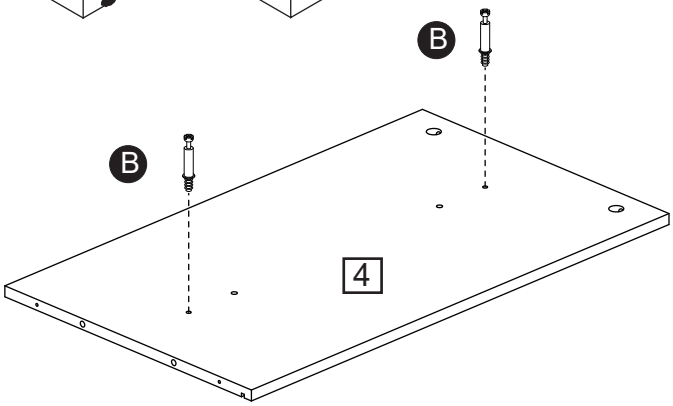

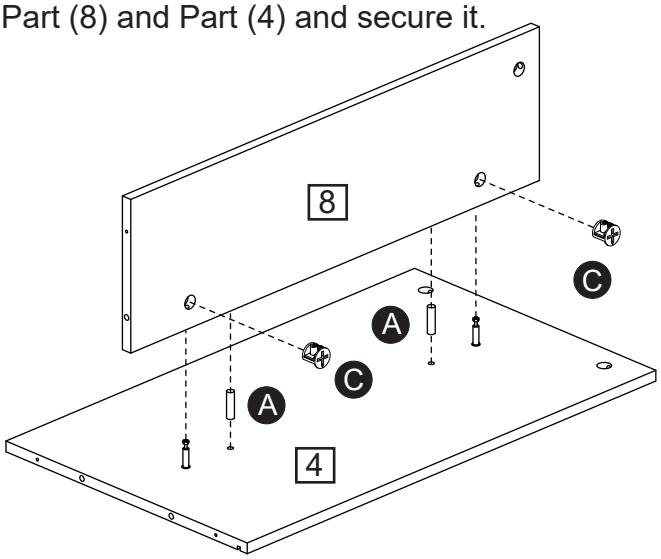

Secure the screw (B) at Part (4).

Step 10

CAM-LOCK
Tighten until shoulder is flush
with panel.Do not overtighten
or undertighten(see example below)

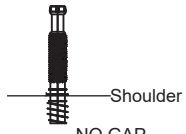

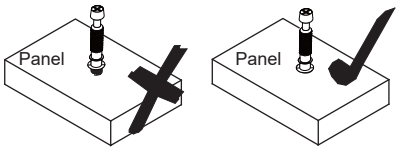

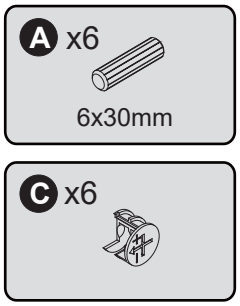

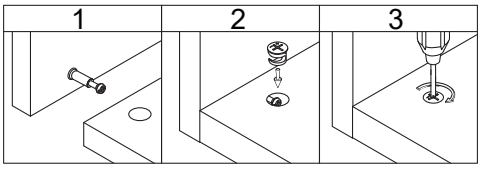

Use the wooden stick (A) and pulley (C) to assemble Part (5), Part (6), Part (3), Part (4), Part (7), and Part (8) onto Part (1) and secure it.

Assembly Instructions

Step 11

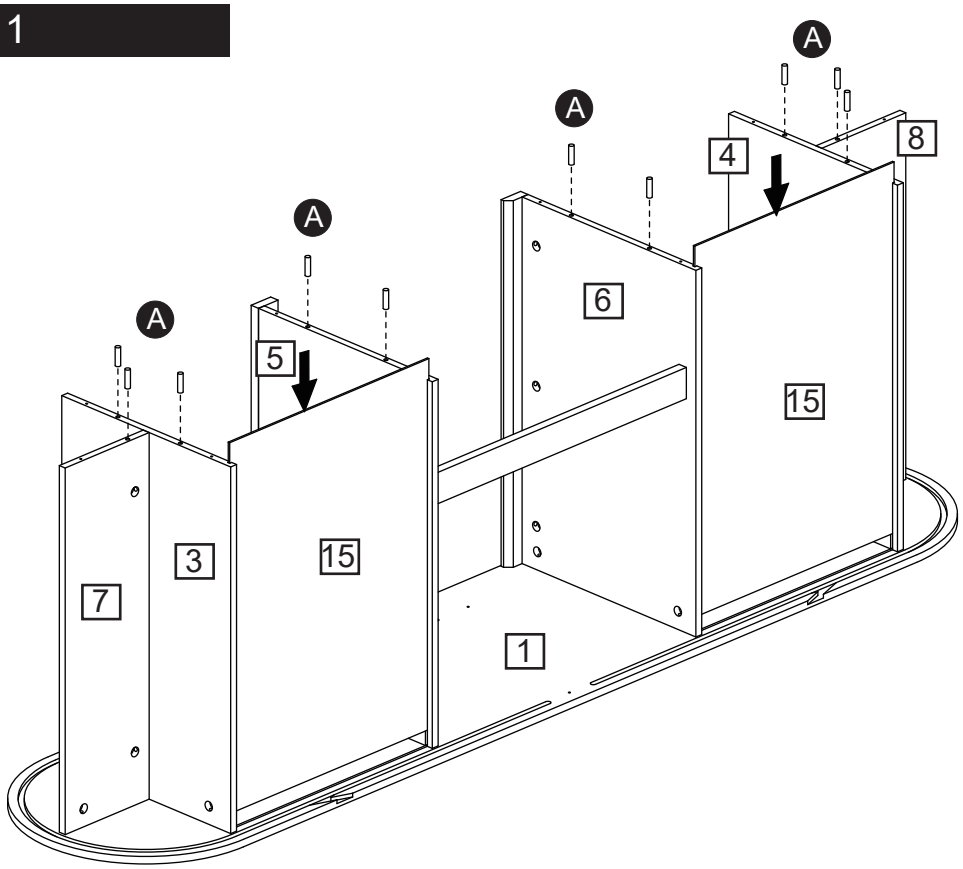

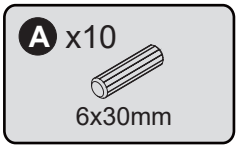

Carefully insert Part (15) into the slots of Part (3), Part (5), Part (6), and Part (4).

Step 12

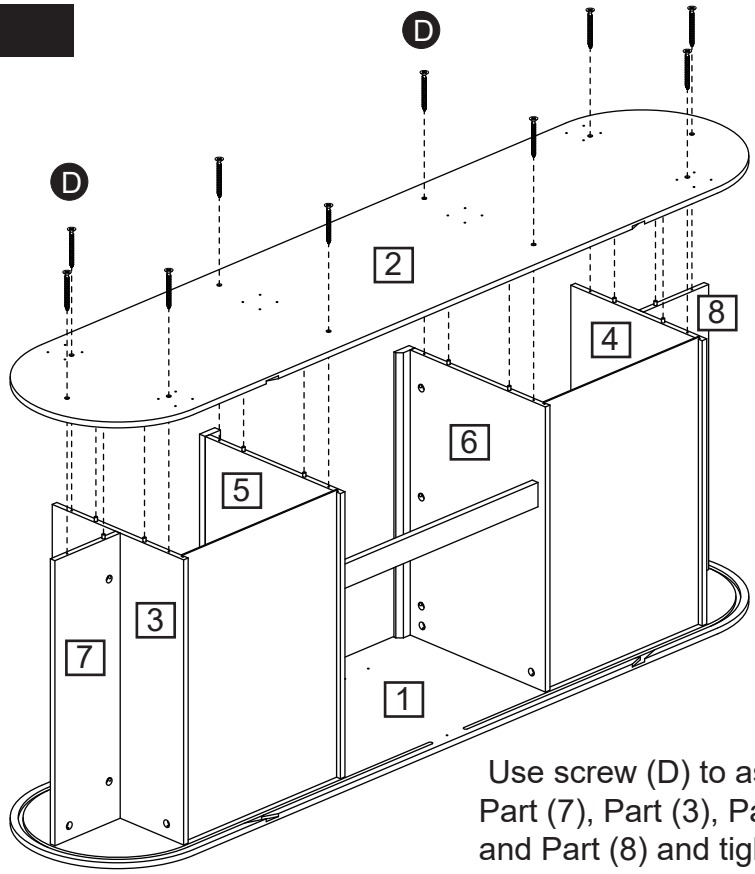

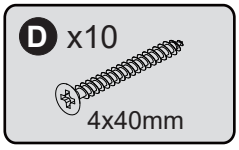

Use screw (D) to assemble Part (2), Part (7), Part (3), Part (5), Part (6), Part (4), and Part (8) and tighten.

Assembly Instructions

Step 13

Use screw (E) to secure Part (18) and assemble Part (2) and tighten.

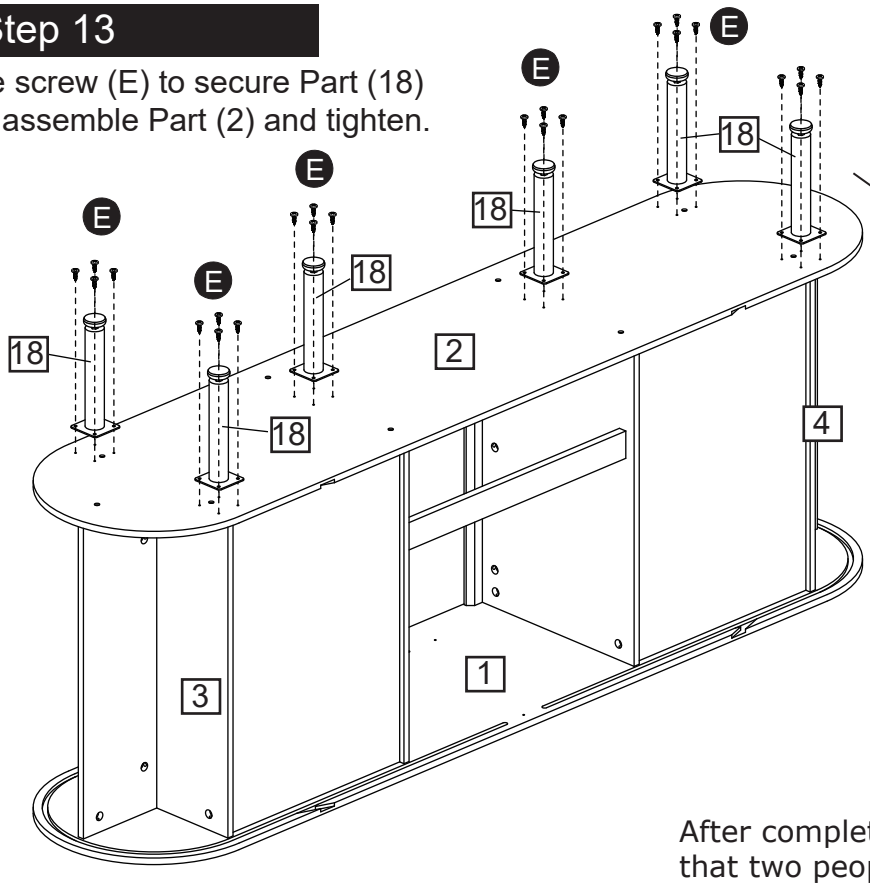

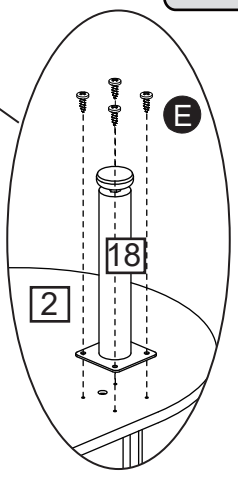



After completing Step 13 , it is recommended that two people turn the product 180 to the next step.

E x24



4x12mm

Step 14

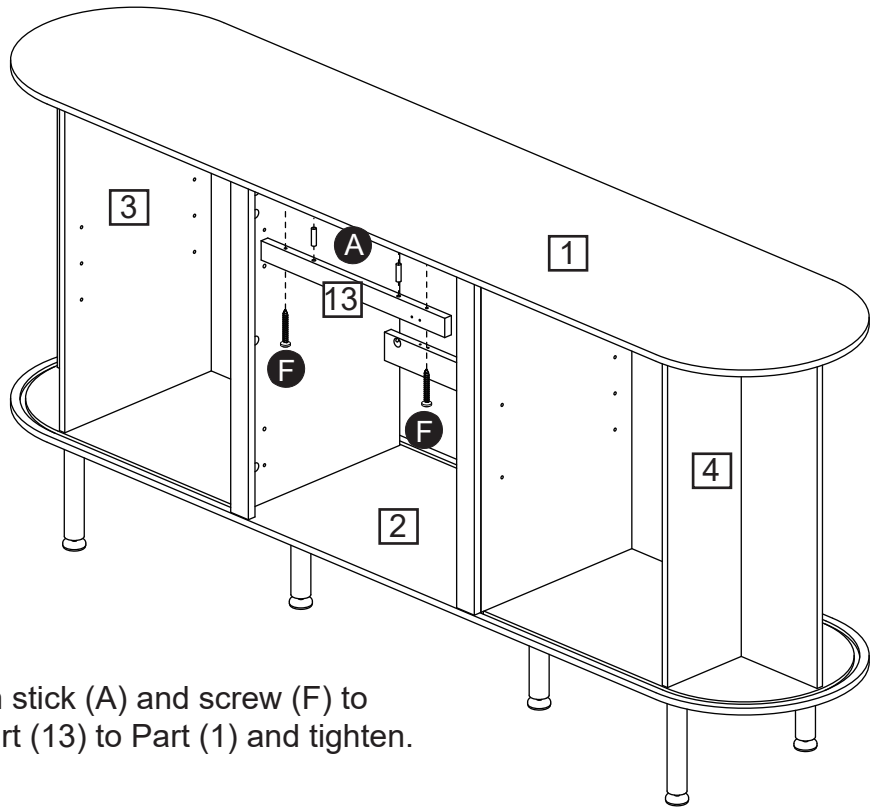

Use wooden stick (A) and screw (F) to assemble Part (13) to Part (1) and tighten.

A x2



6x30mm

F x2



4x35mm

Assembly Instructions

Step 15

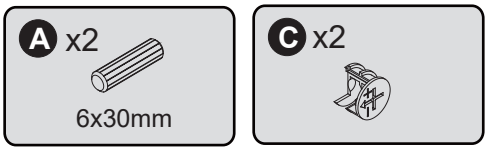

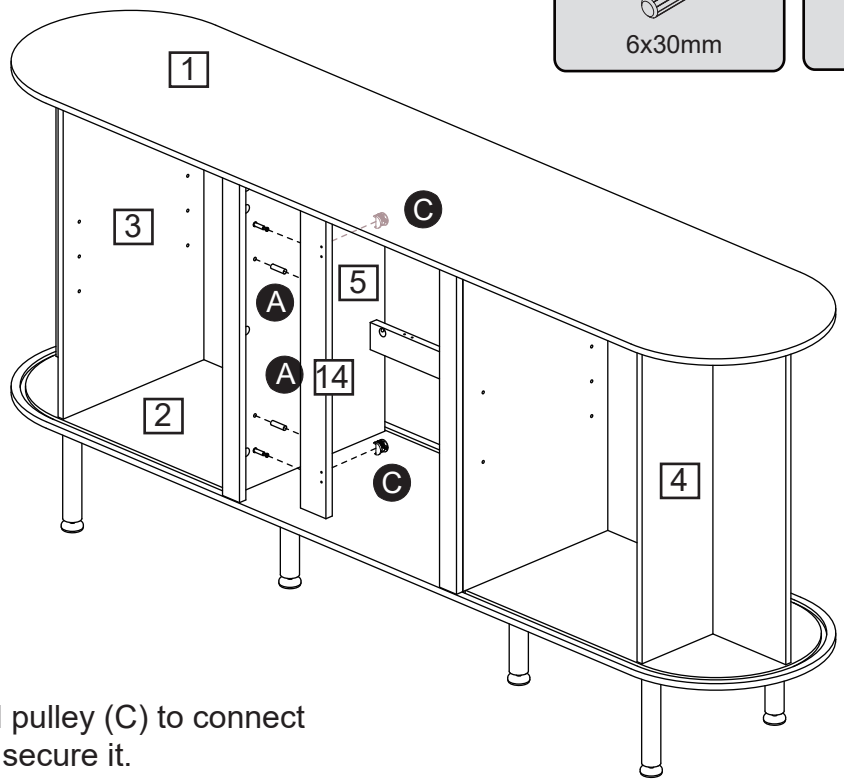

Use wooden stick (A) and pulley (C) to connect Part (14) and Part (5) and secure it.

Step 16

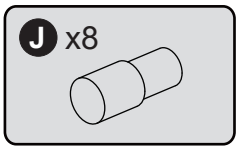

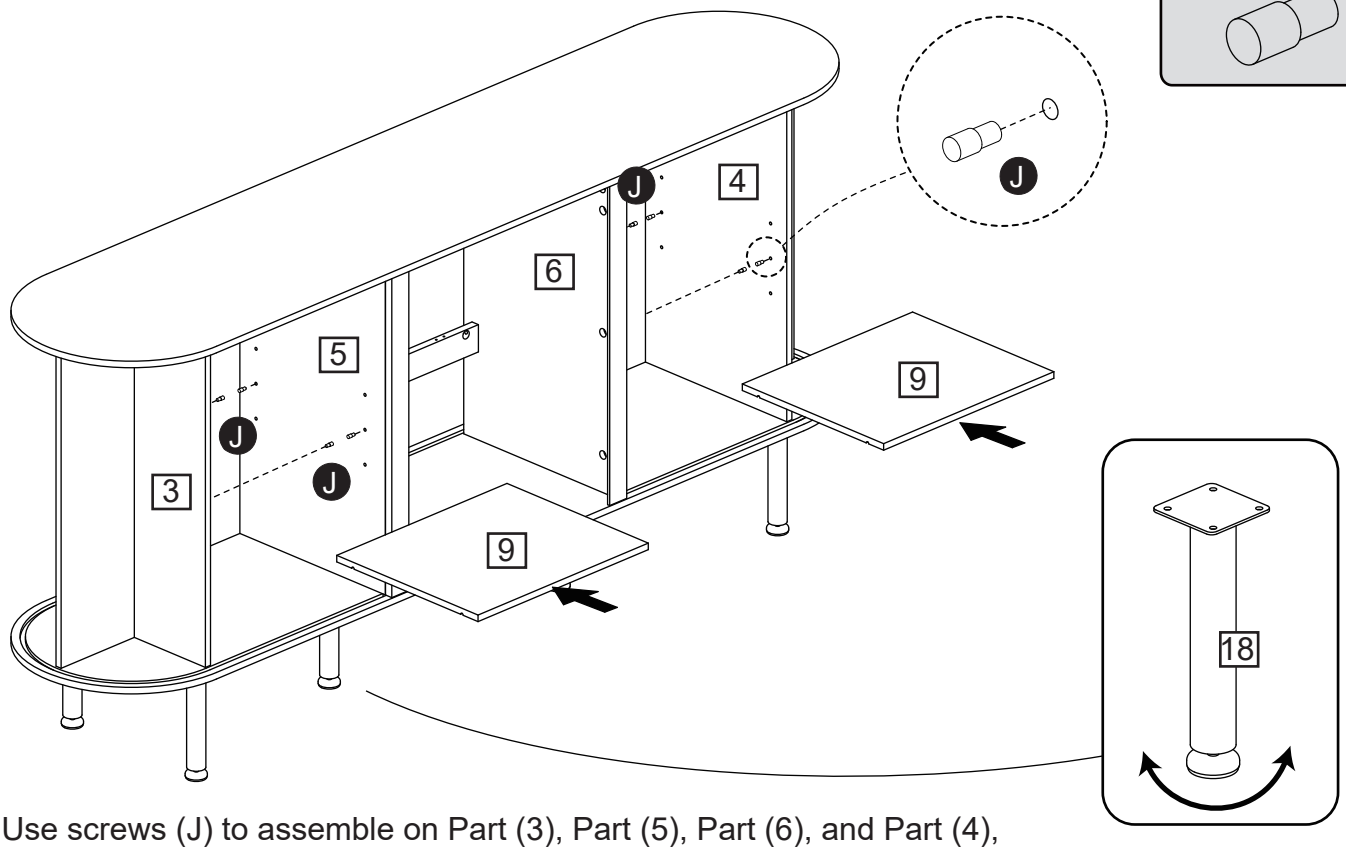

Use screws (J) to assemble on Part (3), Part (5), Part (6), and Part (4), then place Part (9) as shown in the diagram.

Assembly Instructions

Step 17

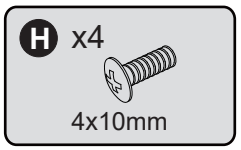

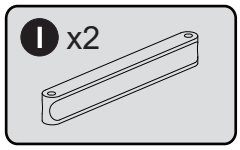

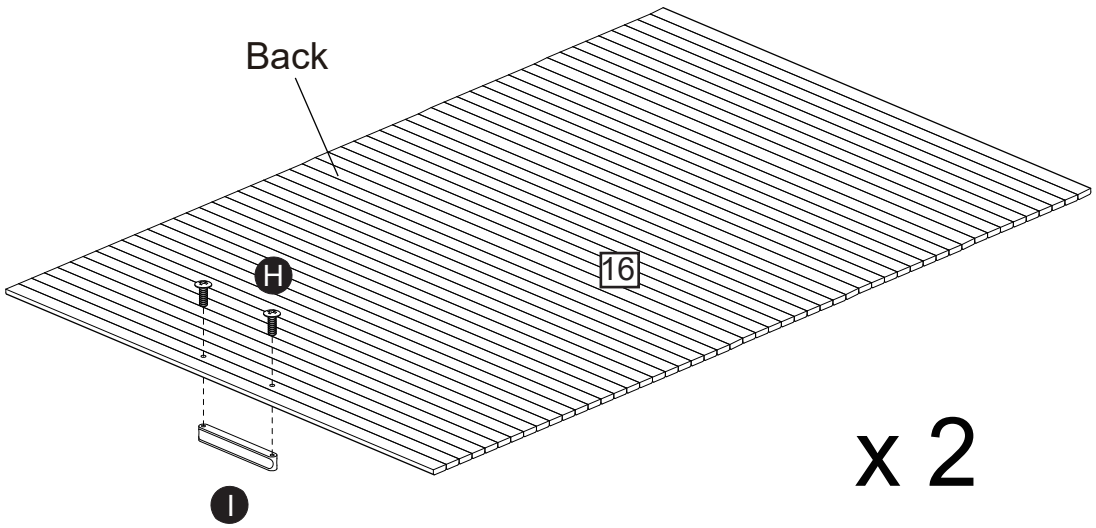

Assemble Part (I) using screw (H) at Part (16), repeat this step twice.

Step 18

Assemble Part (16) into the slots of Part (1) and Part (2), as shown in the diagram. This step requires two people.

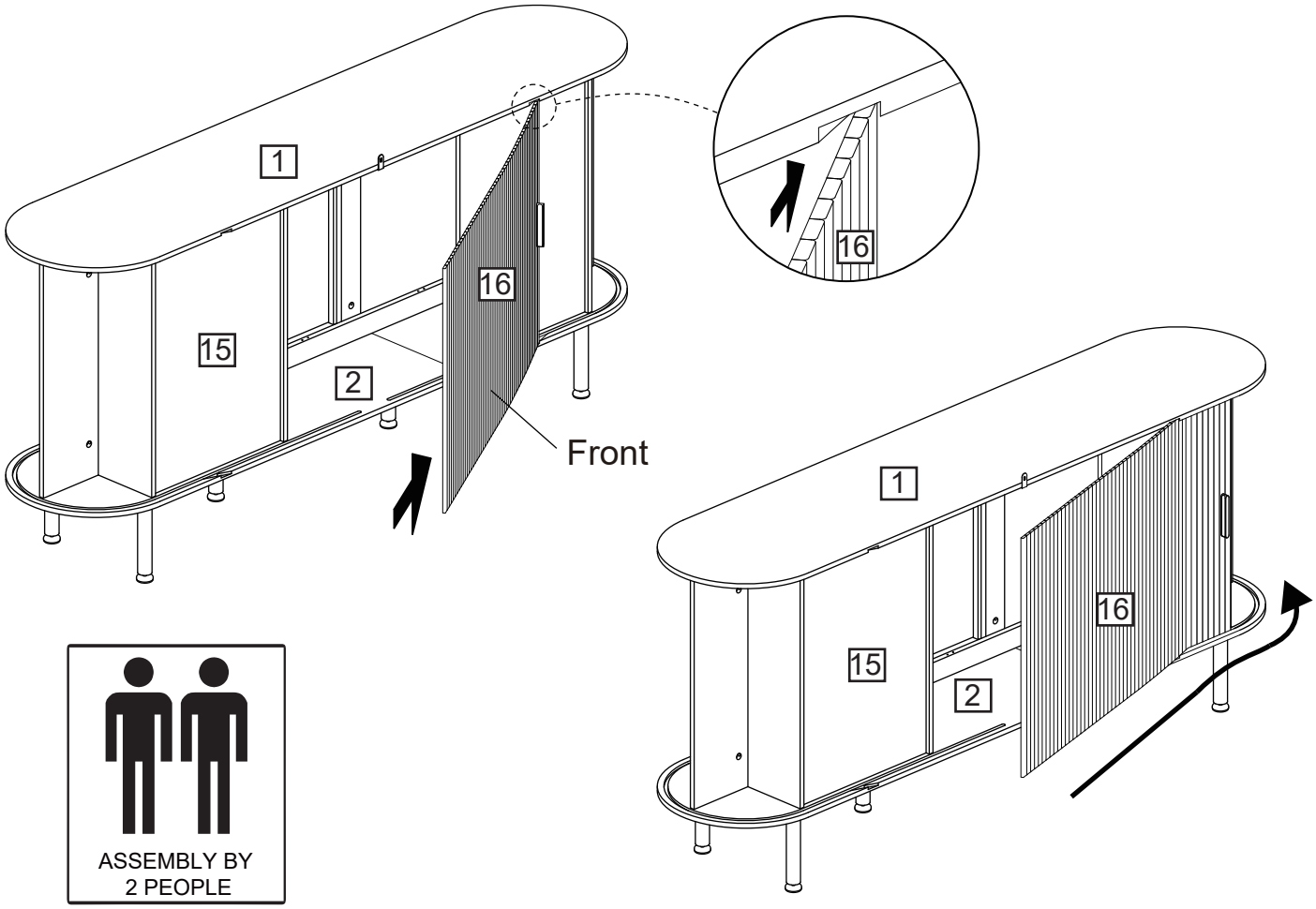

Assembly Instructions

Step 19

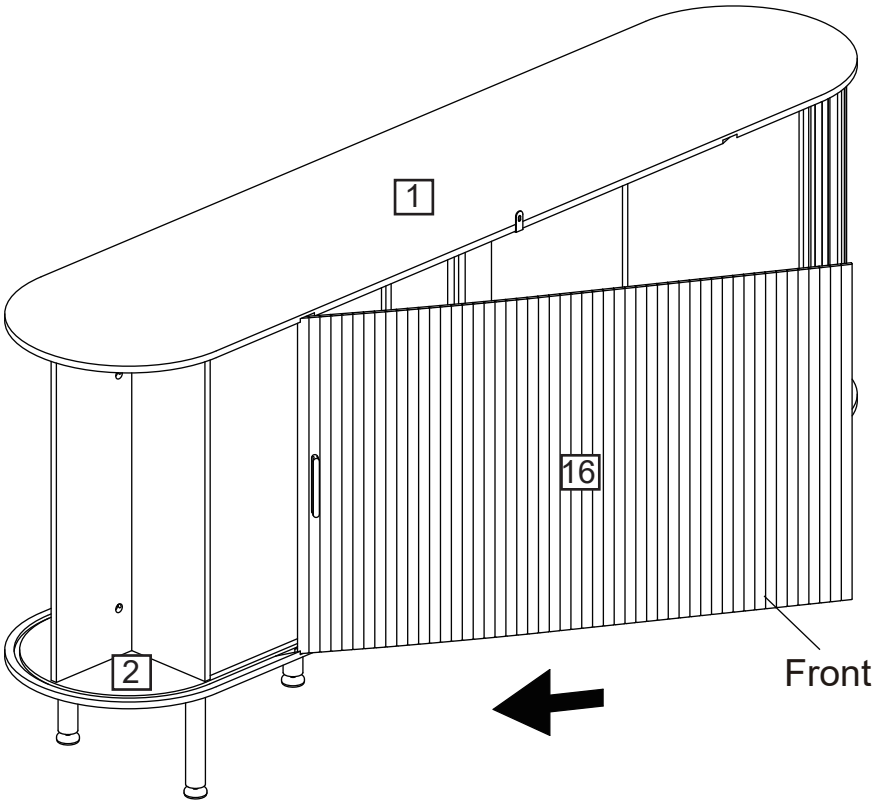

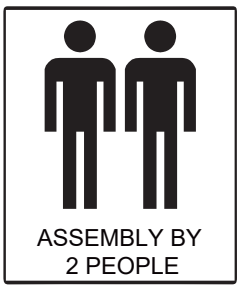

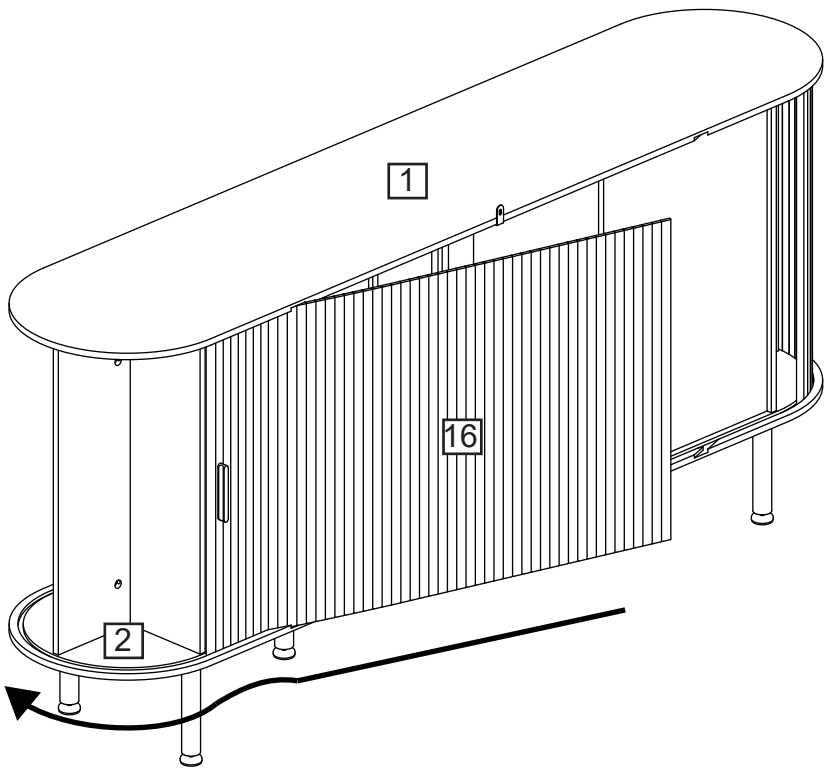

Assemble Part (16) into the slots of Part (1) and Part (2), as shown in the diagram.
This step requires two people.

Assembly Instructions

Step 20

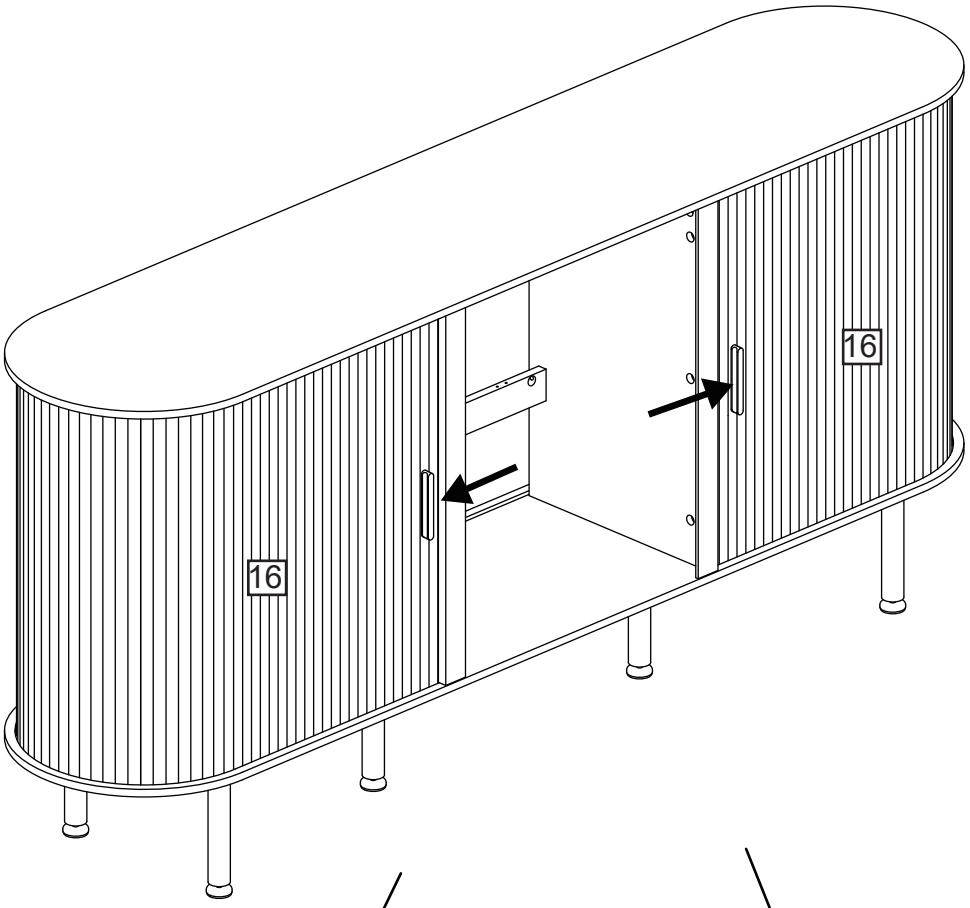

Version 1

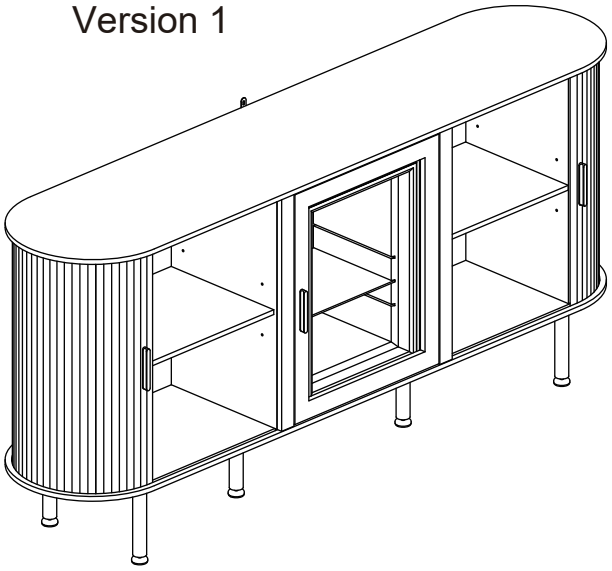

Version 2

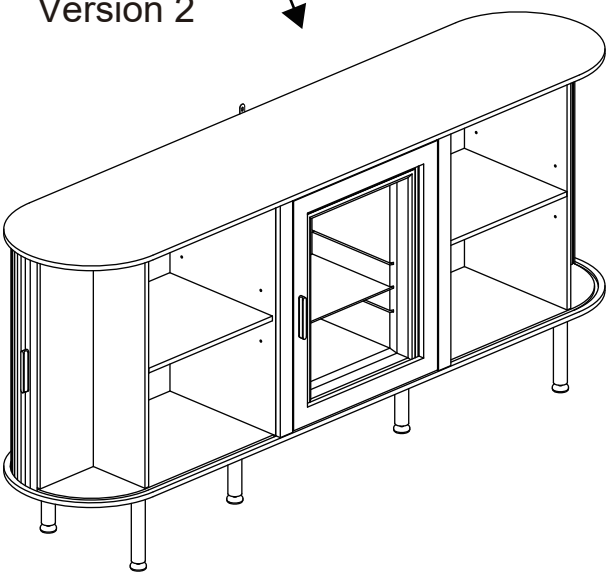

Assembly Instructions

Step 21

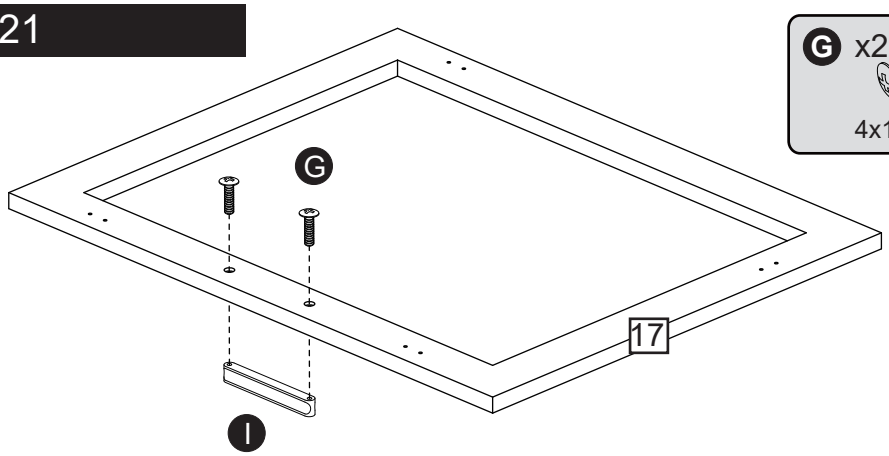

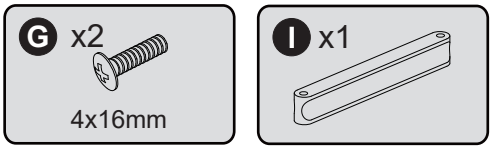

Use Part (I) and screw (G) to assemble Part (17).

Step 22

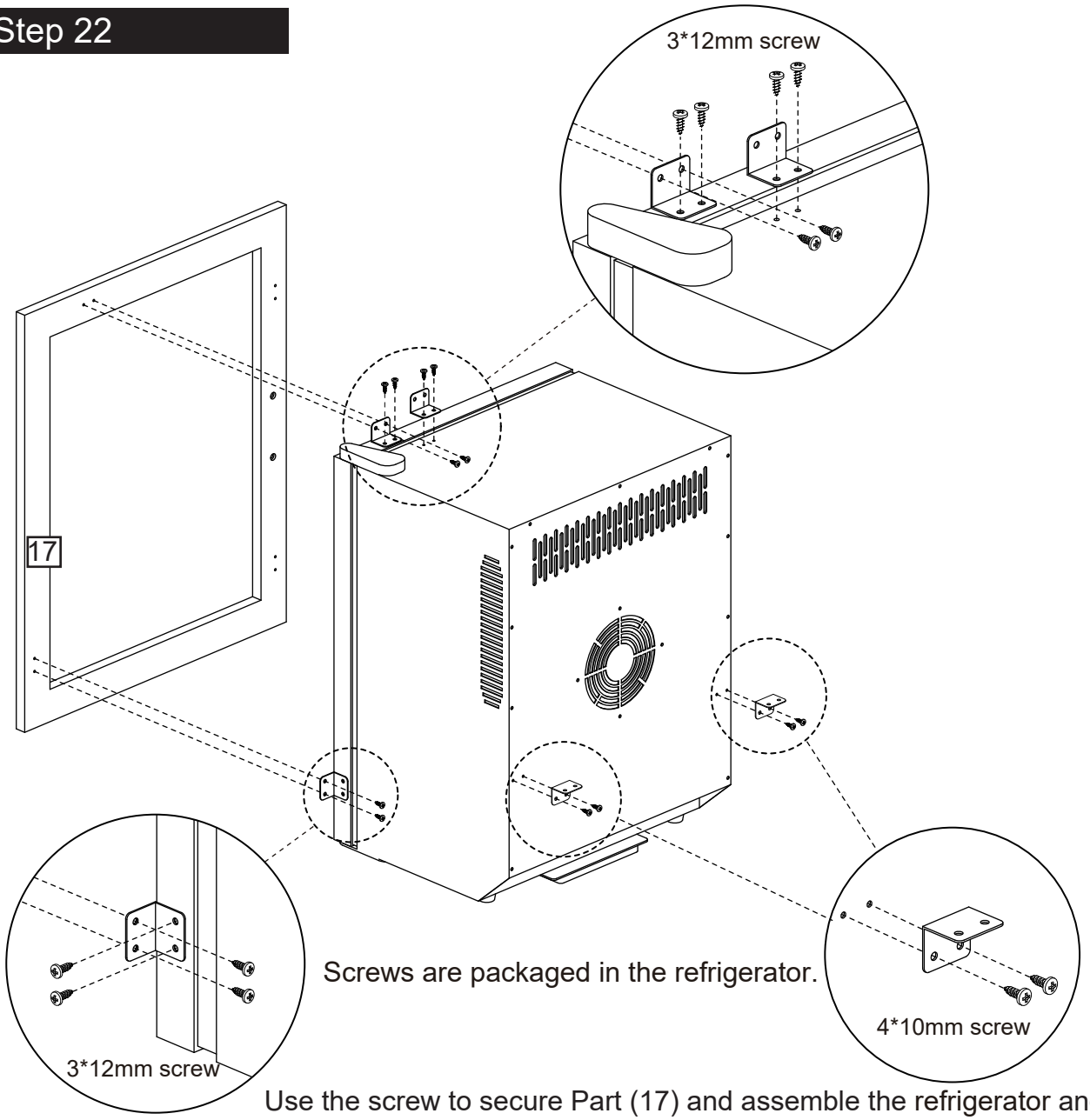

Screws are packaged in the refrigerator.

Use the screw to secure Part (17) and assemble the refrigerator and its framework as shown in the diagram.

Assembly Instructions

Step 23

Screws are packaged in the refrigerator.

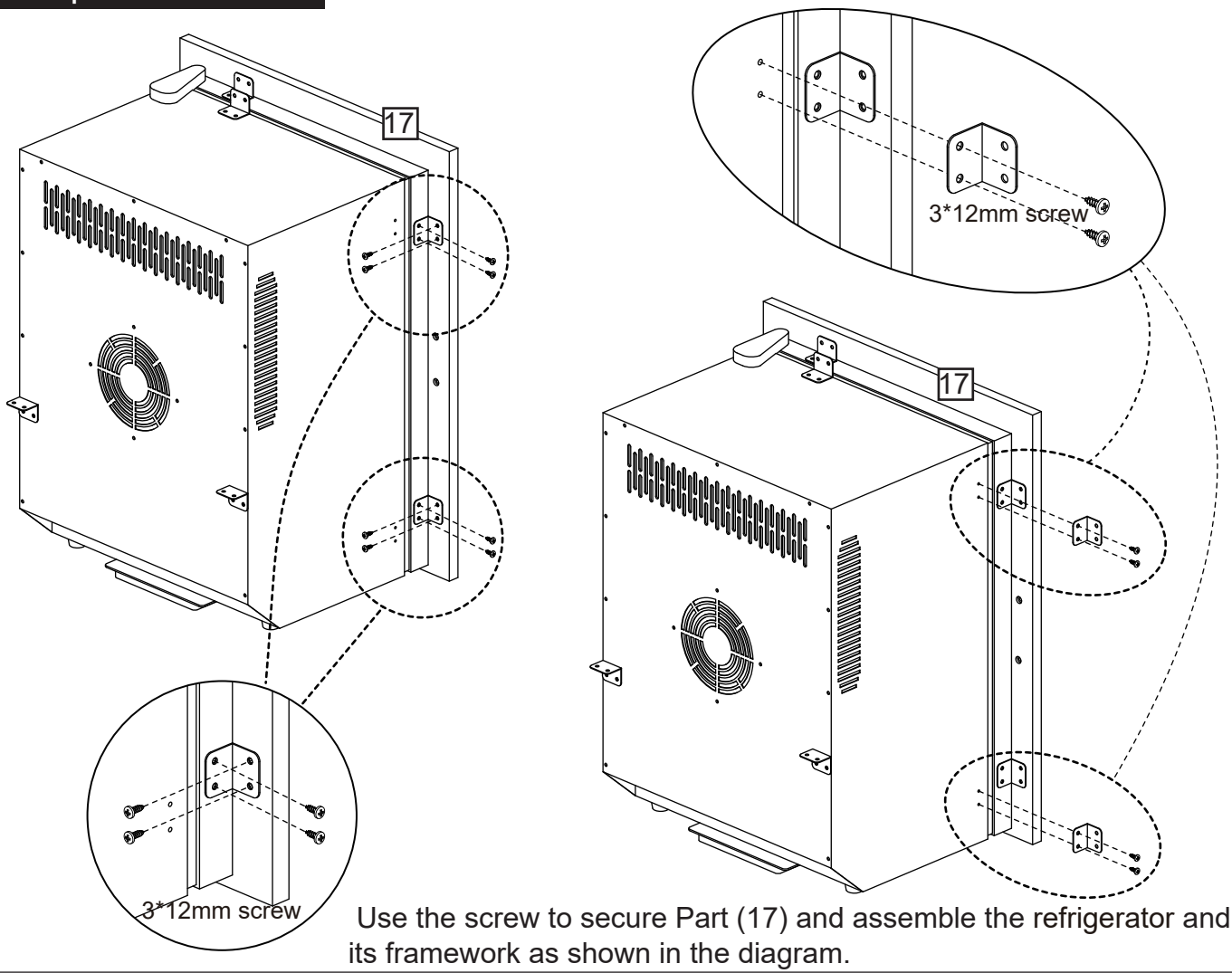

Use the screw to secure Part (17) and assemble the refrigerator and its framework as shown in the diagram.

Step 24

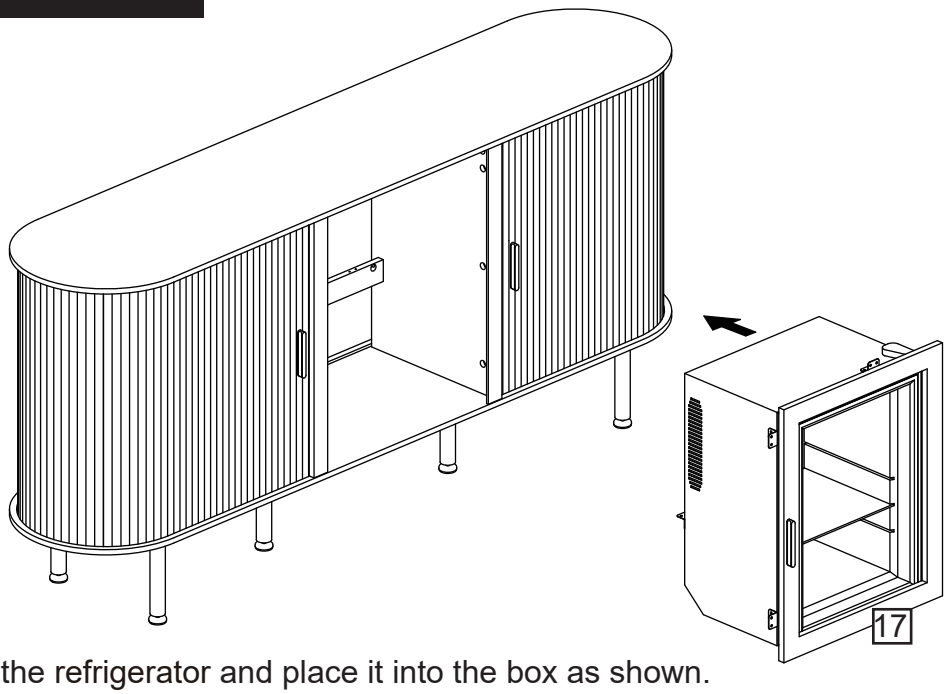

Assemble the refrigerator and place it into the box as shown.

Assembly Instructions

Step 25

Secure the refrigerator in the correct position and fix it at Part (14), Part (13), and Part (12) as shown in the diagram.

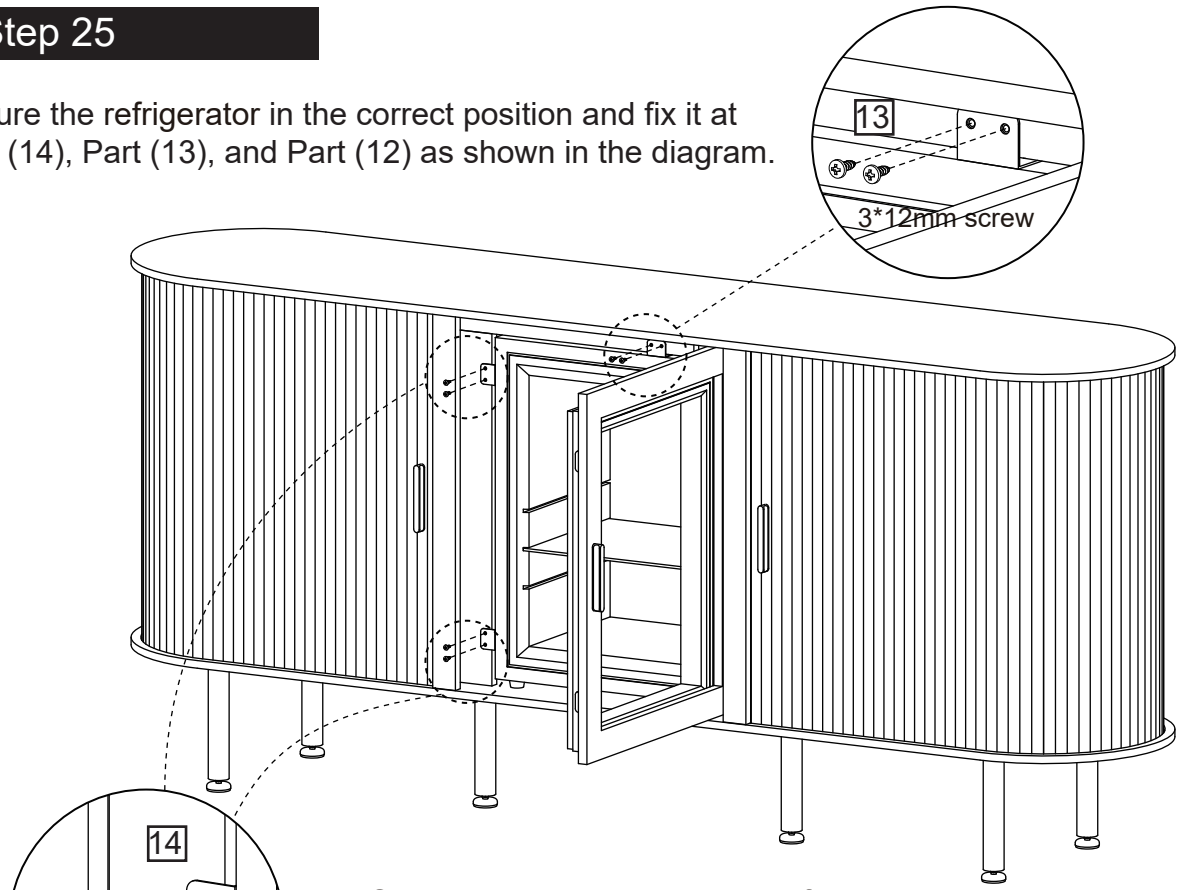

Screws are packaged in the refrigerator.

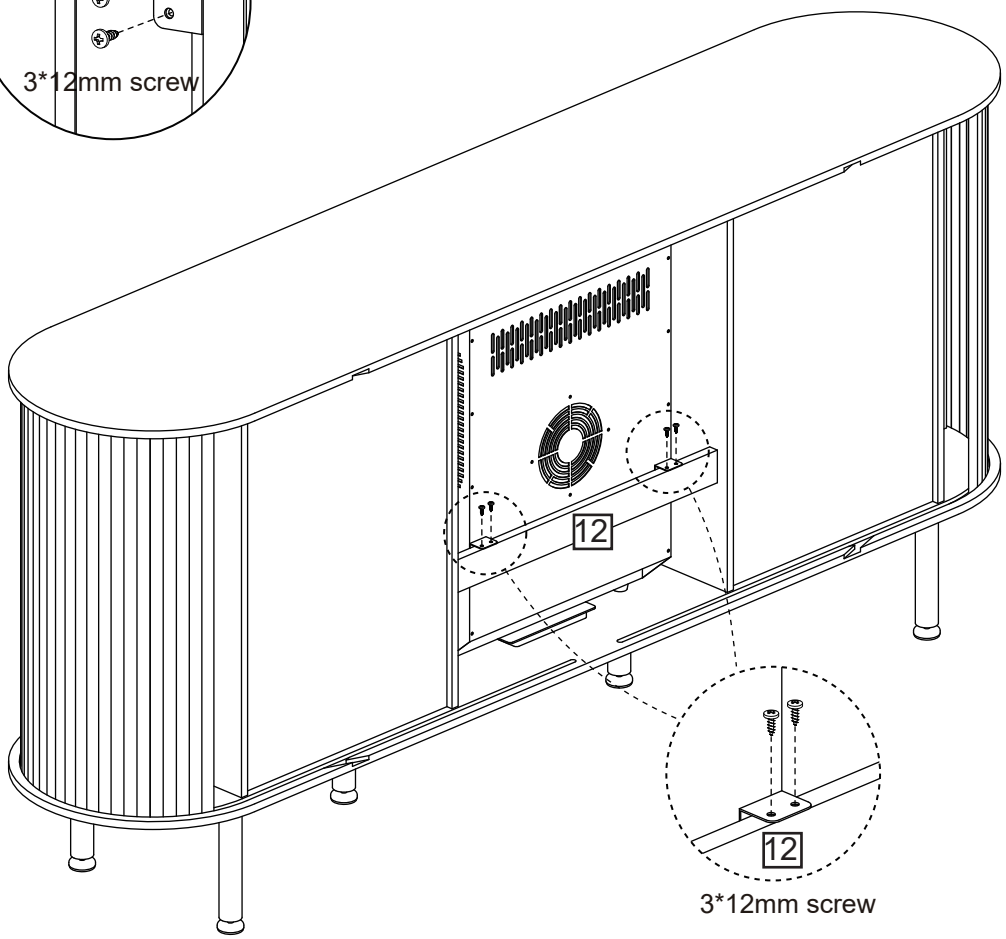

Assembly Instructions

Step 26

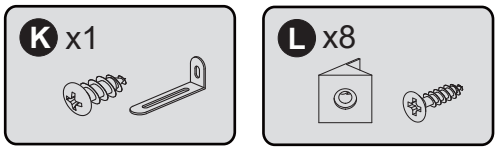

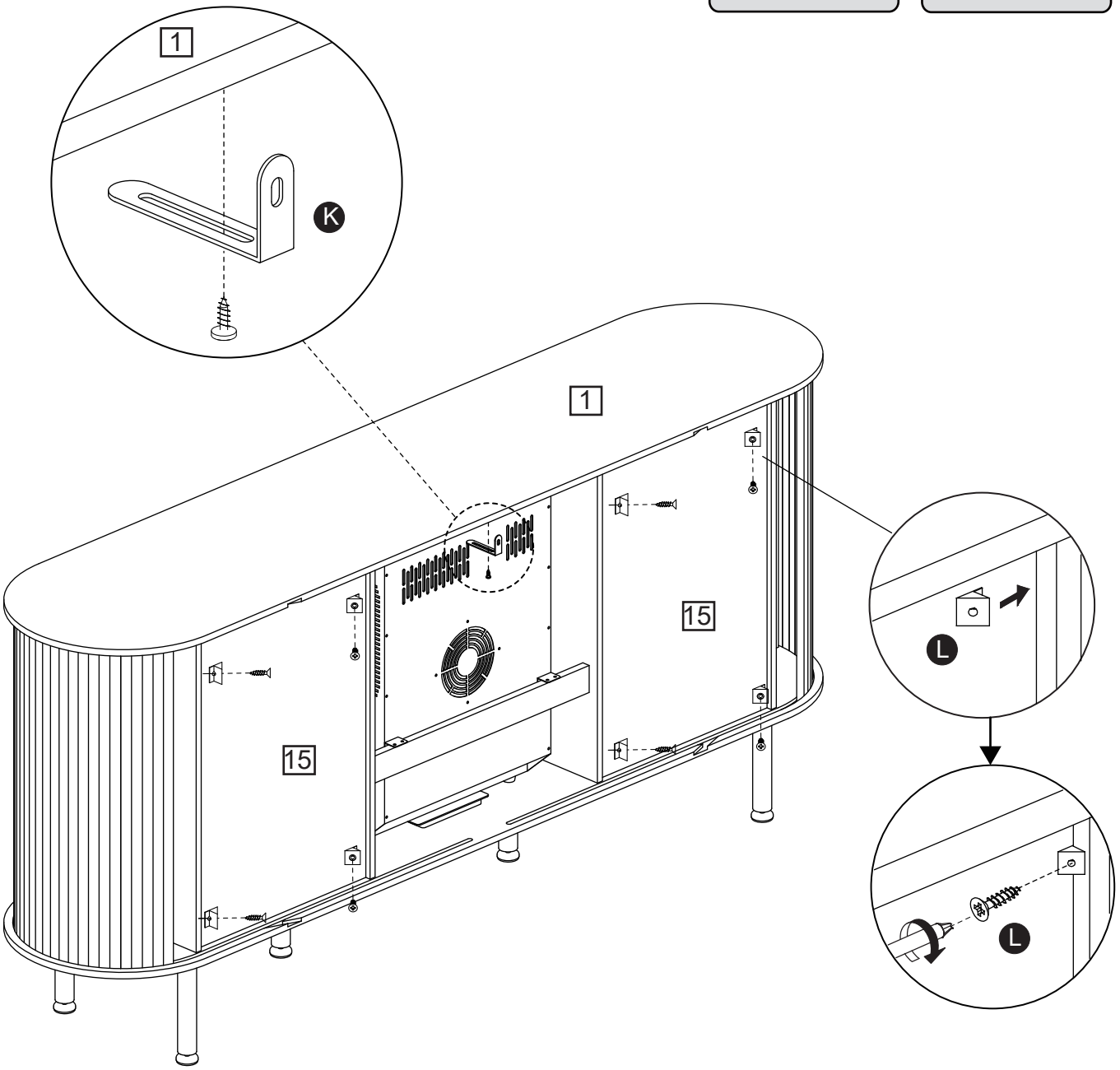

1. Assemble Part (L) at Part (15).
2. Assemble the components at Part (1).

Assembly Instructions

Step 27

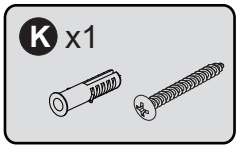

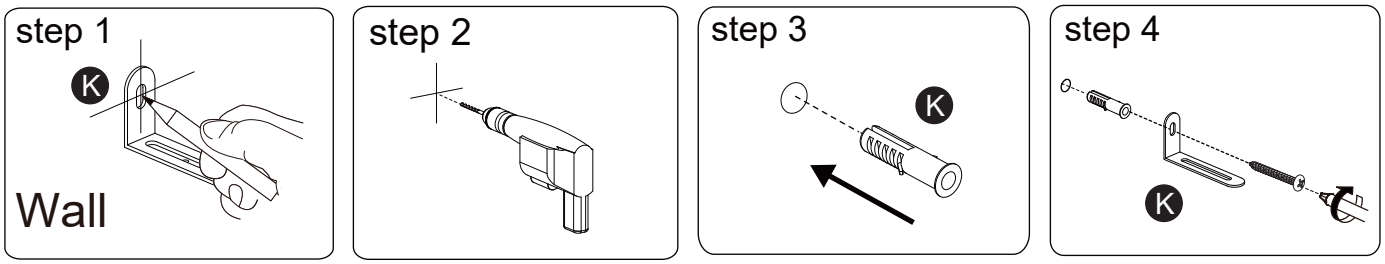

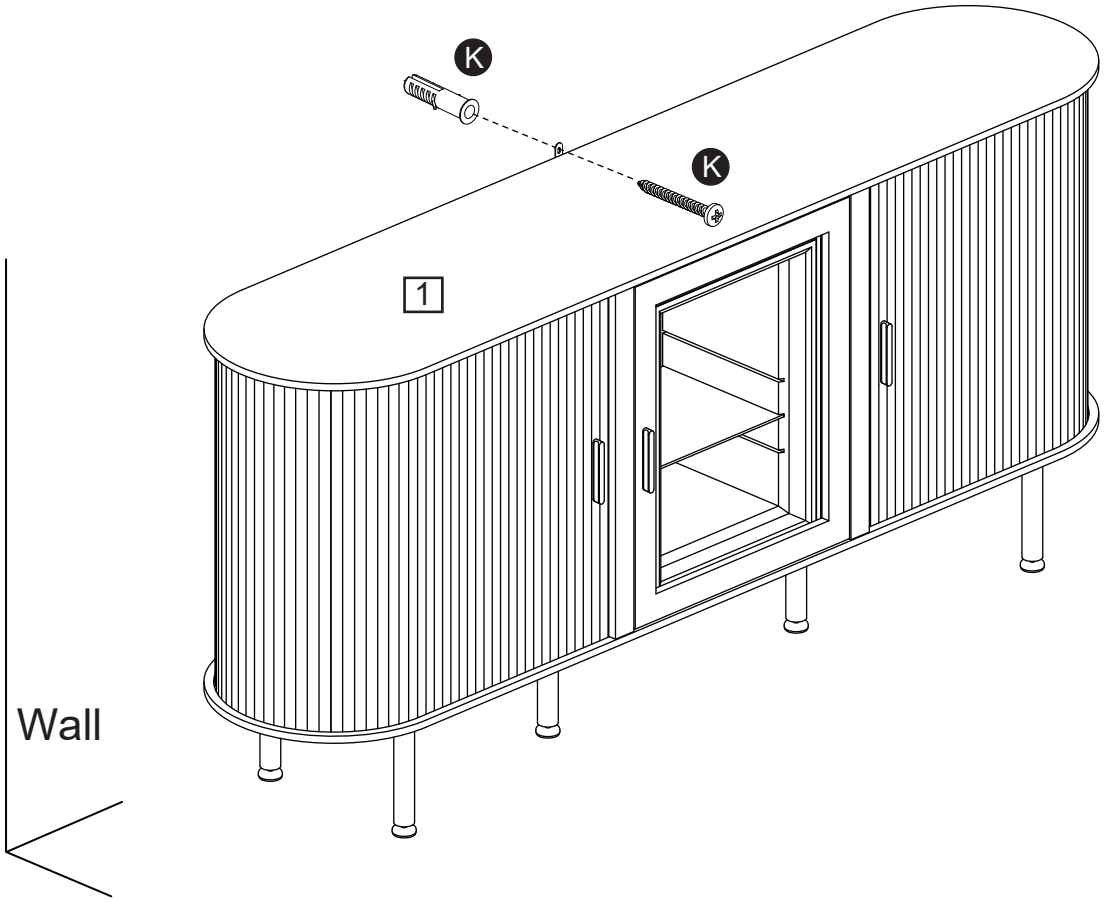

Install the anti-fall mechanism as shown in the diagram.

A Guide to Wall Mounting & Fixings

Important note:

If plastic wall plugs (rawl plugs) are supplied with your product, e.g.:



- these are only suitable for use in masonry walls.

If you are in any doubt about the correct wall plugs for your wall, seek professional advice.

Failure of the product due to using the incorrect fixings is the responsibility of the installer.

Important: when drilling into walls always check that there are no hidden wires or pipes etc.

Make sure that the screws and wall plugs being used are suitable for **supporting your unit. Consult a qualified tradesperson if you** are unsure.

Hints:

1: General rule: always use a larger screw and wall plug if you are not sure.
2: Ensure you use the recommended drill bit to match the wall plug and hole size.
3: Ensure you drill the hole horizontally; do not force the drill or enlarge the hole.
4: Take extra care when drilling high walls, ceilings and ceramic tiles. Ensure wall plugs are inserted beyond the thickness of the ceramic tiles to avoid the tiles splitting or cracking.
5: Ensure wall plugs are well fitted and are a tight fit in the drilled hole.

Types of walls

You can use one of the following types of wall plug if your walls are made of brick, breeze block, concrete, stone or wood.

No.1 "General Purpose" wall plug

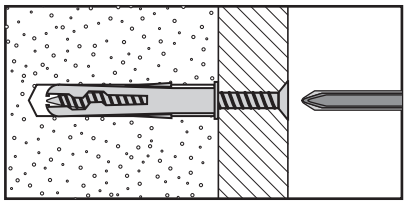

Generally aerated blocks should not be used to support heavy loads, use a specialist fitting in this case. For light loads, general purpose wall plugs can be used.

No.3 "Cavity Fixing" wall plug

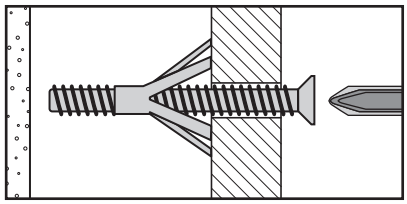

For use with plasterboard partitions or hollow wooden doors.

No.5 "Hammer Fixing" wall plug

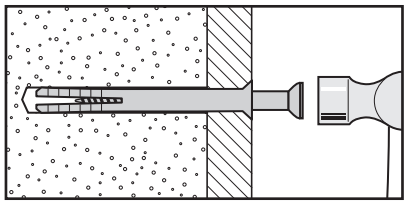

For use with walls stuck with plasterboard. The hammer fixing allows it to be fixed to the wall rather than the plasterboard. Always check the fixing is secure to the retaining wall.

No.2 " Plasterboard" wall plug

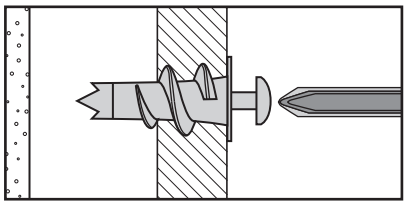

For use when attaching light loads onto plasterboard partitions.

No.4 " Cavity Fixing – Heavy Duty" wall plug

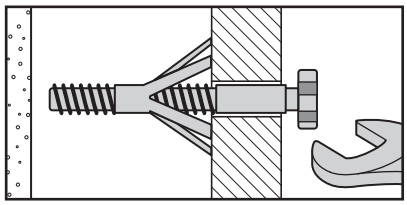

For use when fitting or supporting heavy loads such as shelving, wall cabinets and coat racks.

No.6 " Shield Anchor" wall plug – heavy loads

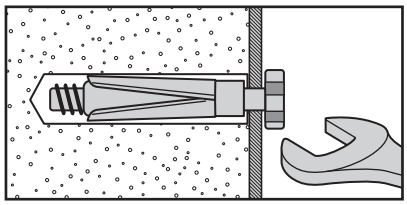

For use with heavier loads such as TV and HiFi speakers and satellite dishes etc.

Care & Maintenance

Safety: always check the fitting and location to ensure your safety in and around the home.

Fitting: from time to time check the fitting to ensure the wall plugs or screws do not become loose.