ASSEMBLY INSTRUCTIONS

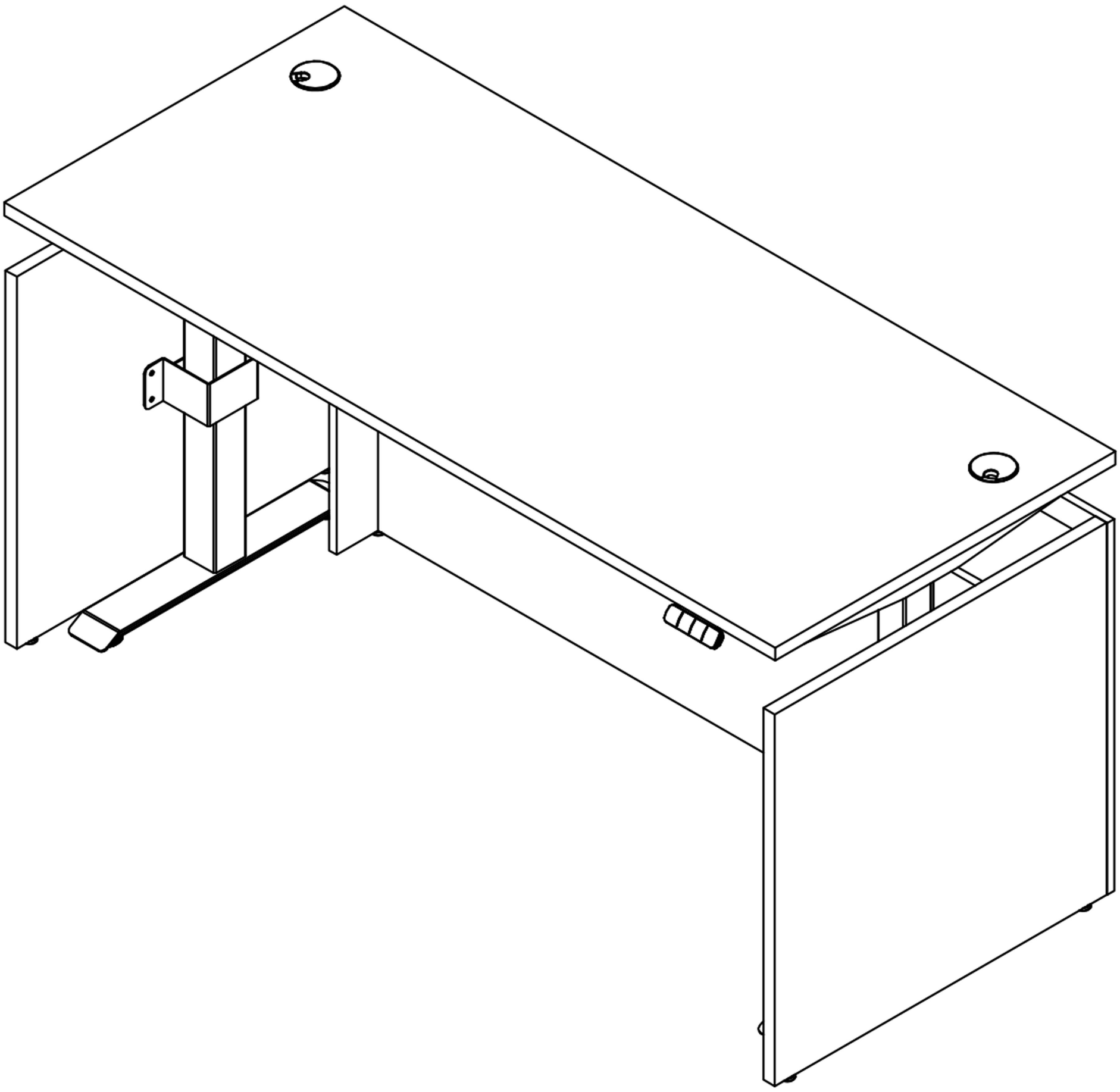

Dear Customer,

Thank you for choosing us. Before you begin assembly, check that you have all the parts and hardware shown on this page.

If there is any item missing, please mark the item, indicating quantity required and send picture to us. We will arrange replacement at first time.

If feel question in assemble, Please feel free to ask us.

Customer satisfaction is our prime.

Your order means a lot to us!

Thank you

TOOLS NEEDED

Crosshead screwdriver

Flat–head screwdriver

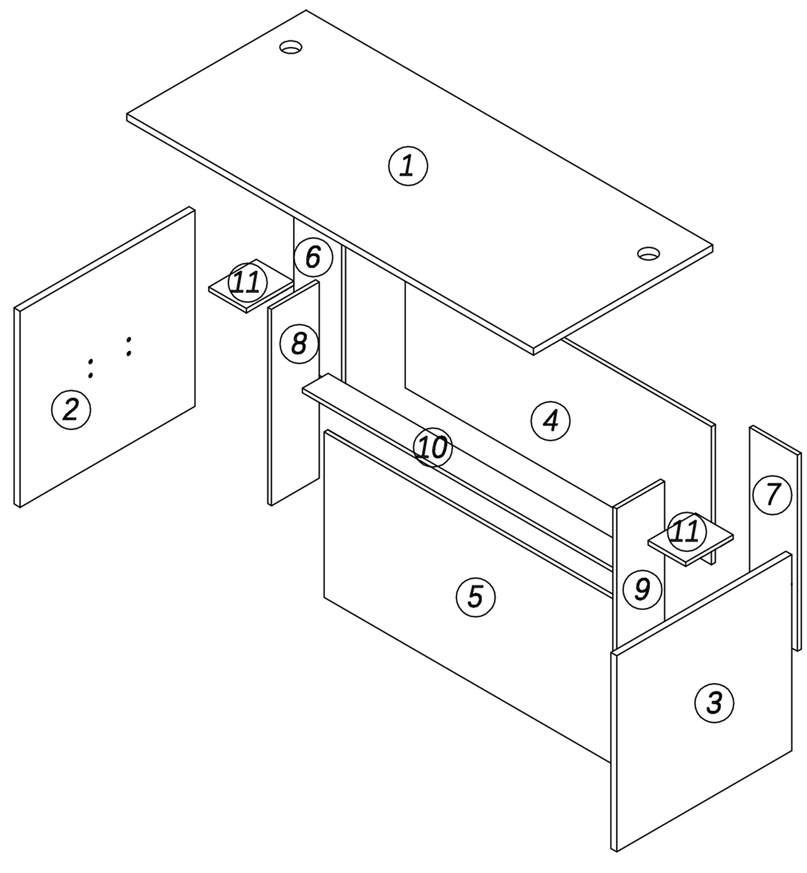

HARDWARE

A:Cam lock
Φ15mm

31 pcs

B:Cam bolt
M6

31 pcs

C:Wooden Dowel
Φ8*30mm

24 pcs

D:Glider
M8*25mm

4 pcs

E:Glider
M6*25mm

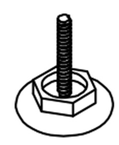

2 pcs

F: Screw
M6*16mm

8 pcs

G:Baffle bracket

2 pcs

H:Plug(low)
Φ15mm

25 pcs

I:Plug(deep)
Φ15mm

6 pcs

J:Grommet
Φ64mm

2 pcs

K:Clamp
190*103

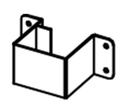

2 pcs

STEP 1

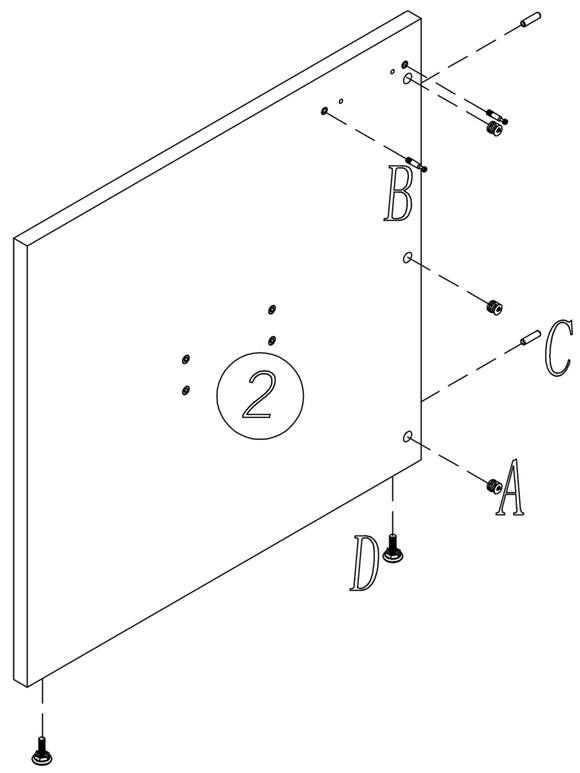

A 3 pcs

B 2 pcs

C 2 pcs

D 2 pcs

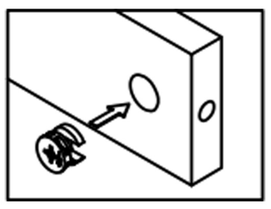

Direction of arrow to the side hole.

STEP 2

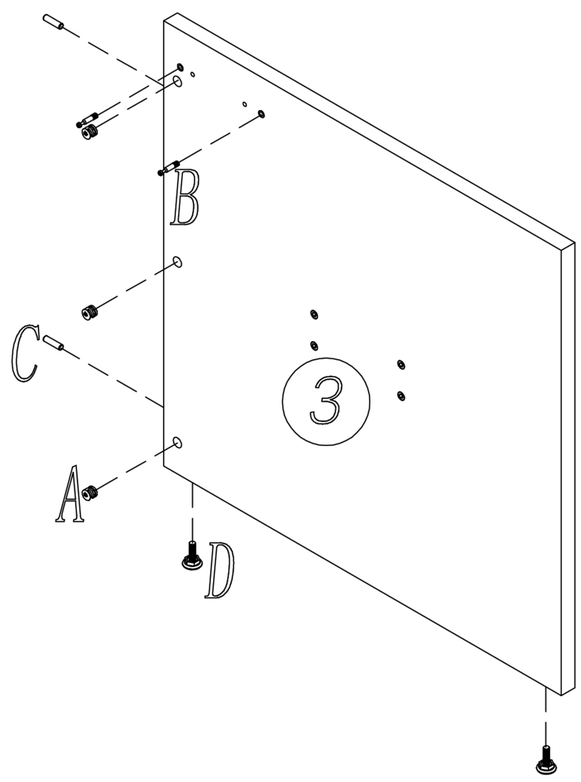

A 3 pcs

B 2 pcs

C 2 pcs

D 2 pcs

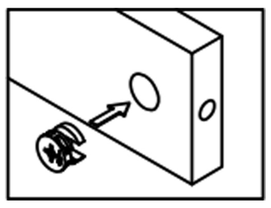

Direction of arrow to the side hole.

STEP 3

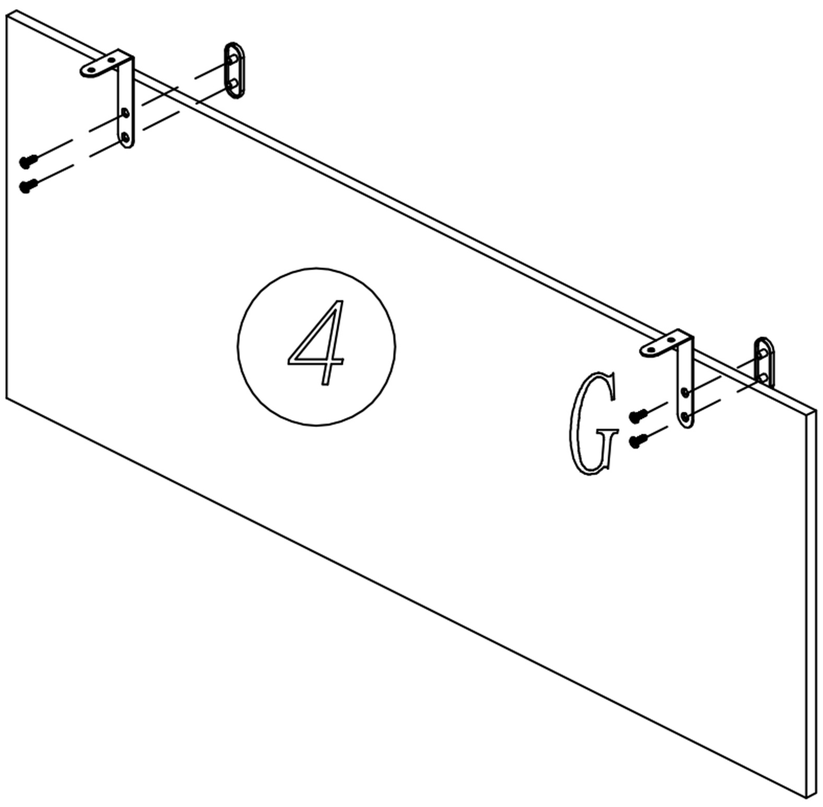

G 2 pcs

Note:

Fasten the remaining screws to the table.

STEP 4

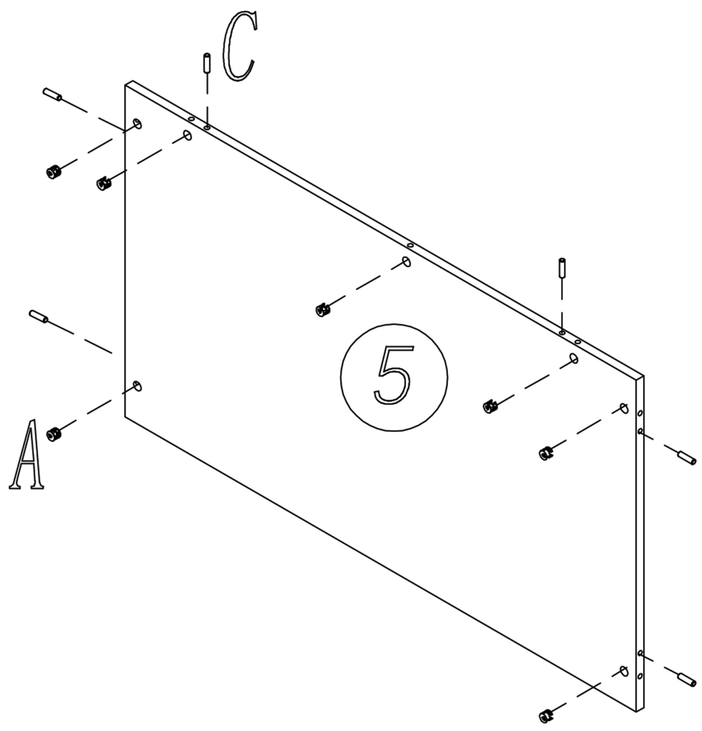

A 7 pcs

C 6 pcs

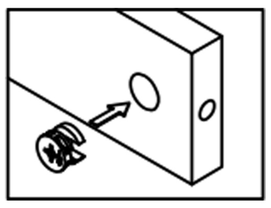

Direction of arrow to the side hole.

STEP 5

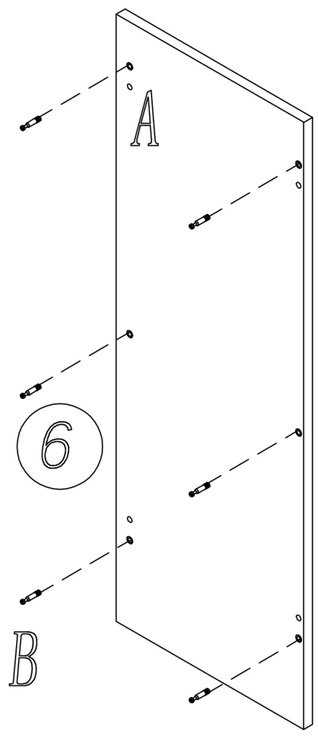

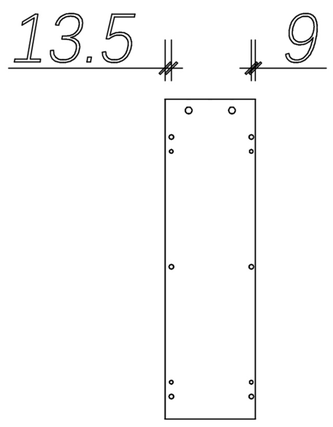

B 6 pcs

STEP 6

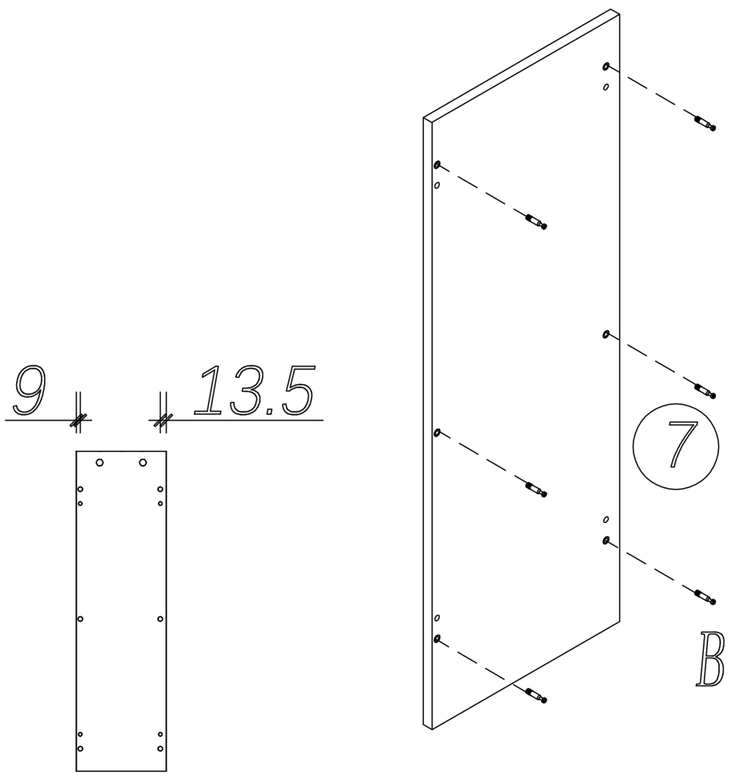

B 6 pcs

STEP 7

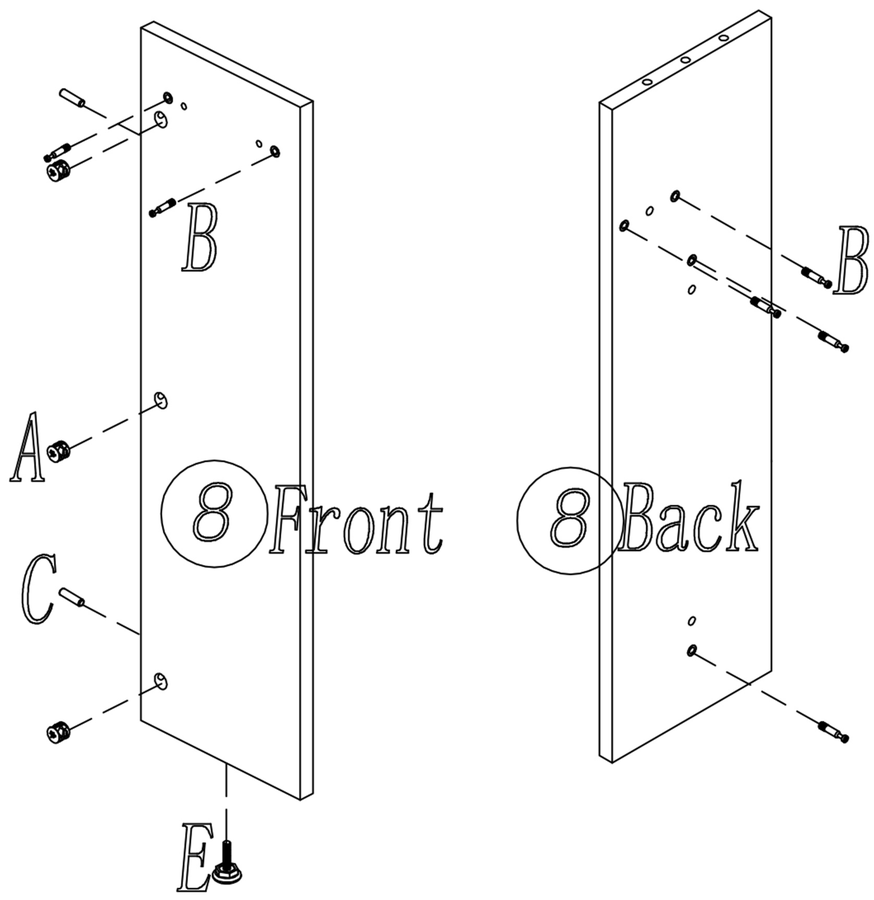

A 3 pcs

B 6 pcs

C 2 pcs

E 1 pcs

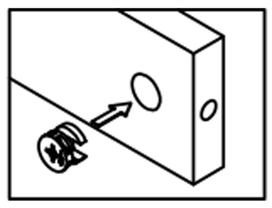

Direction of arrow to the side hole.

STEP 8

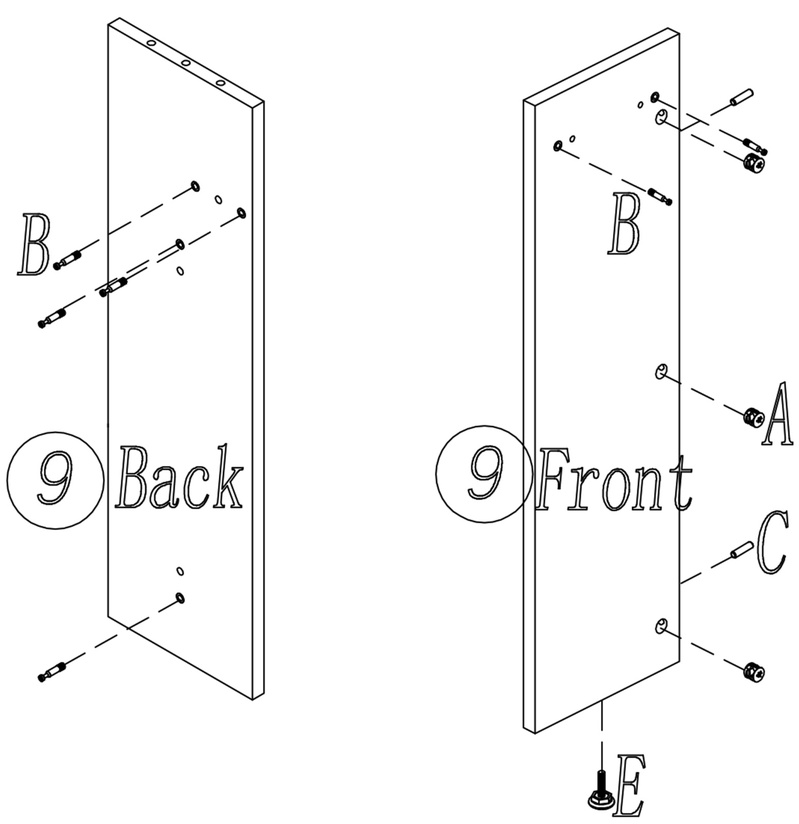

A 3 pcs

B 6 pcs

C 2 pcs

E 1 pcs

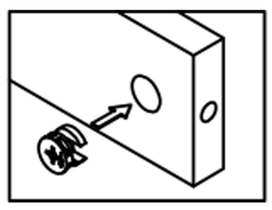

Direction of arrow to the side hole.

STEP 9

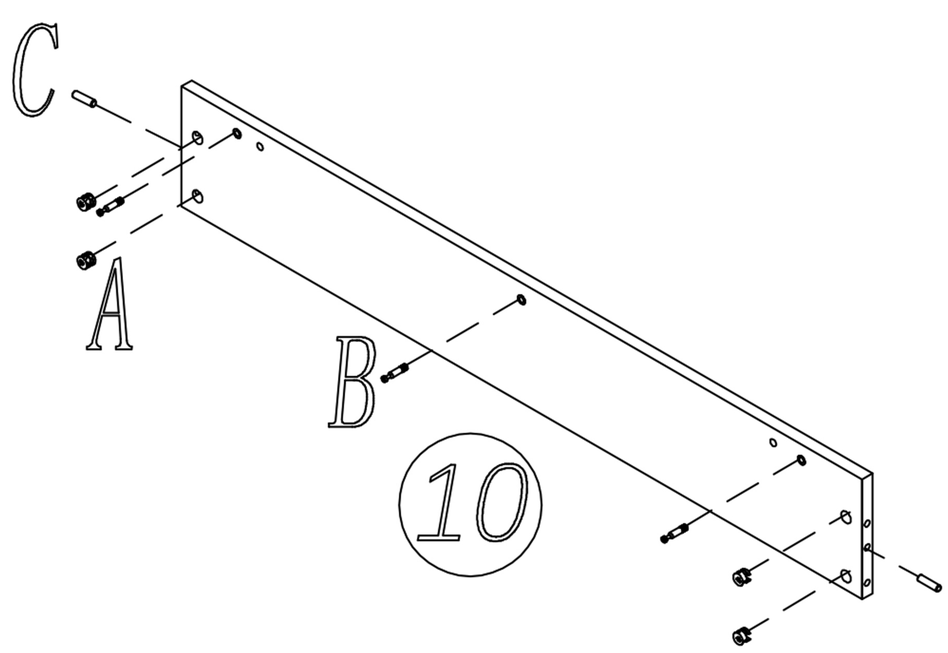

A 4 pcs

B 3 pcs

C 2 pcs

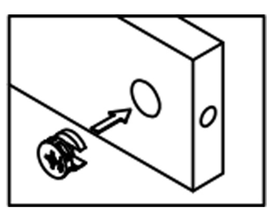

Direction of arrow to the side hole.

STEP 10

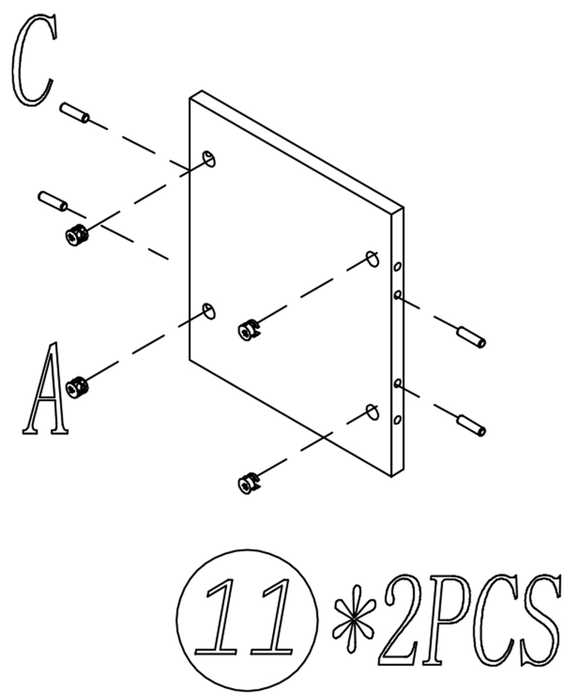

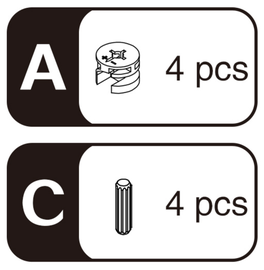

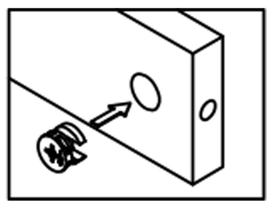

Direction of arrow to the side hole.

STEP 11

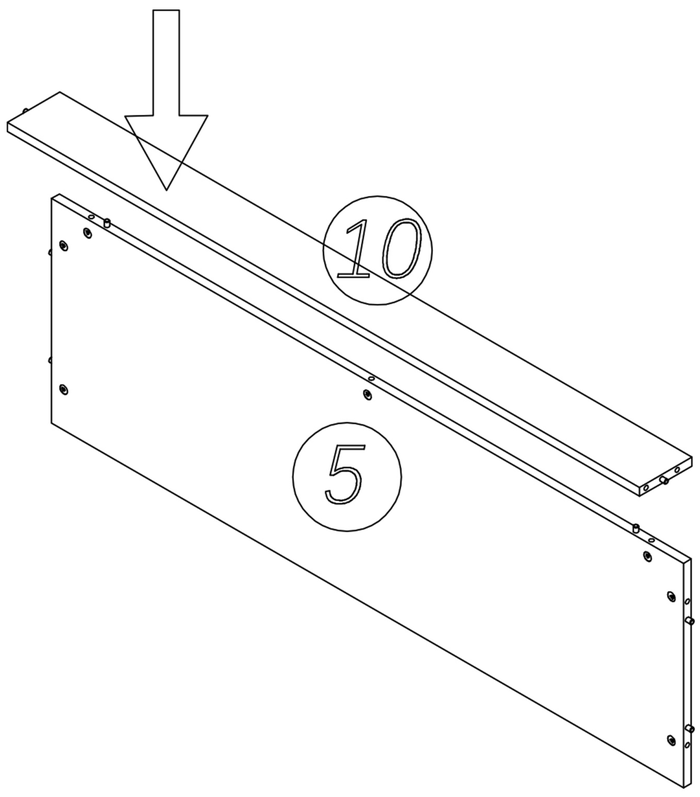

- Align the Cam bolt (in 10) with corresponding holes (in 5).
- Fasten the Cam Locks clockwise.

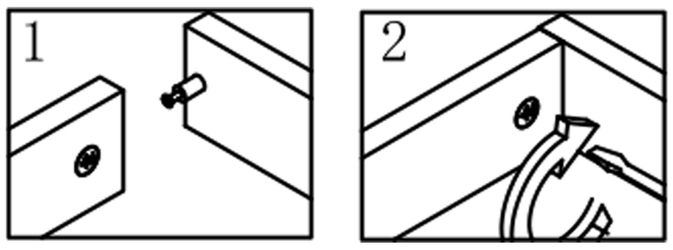

STEP 12

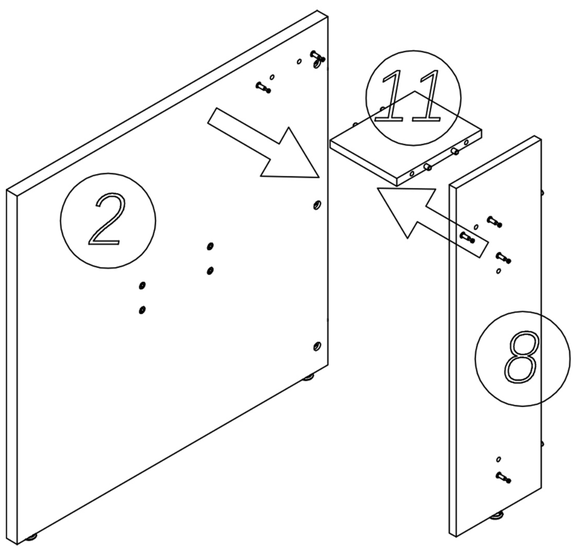

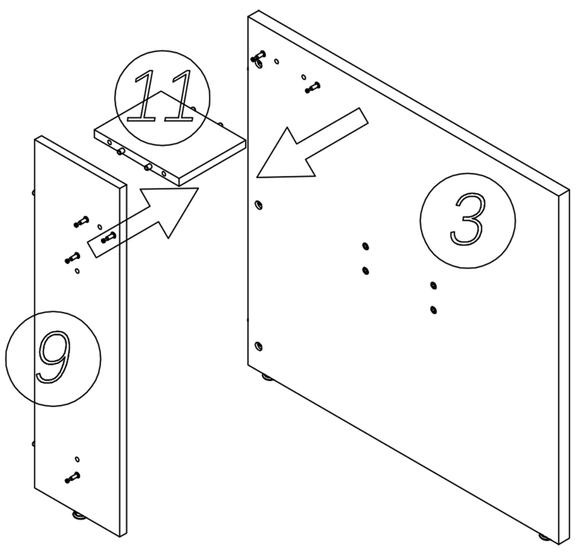

- Align the Cam bolt (in 2&8) with corresponding holes (in 11).
- Align the Cam bolt (in 3&9) with corresponding holes (in 11).
- Fasten the Cam locks clockwise.

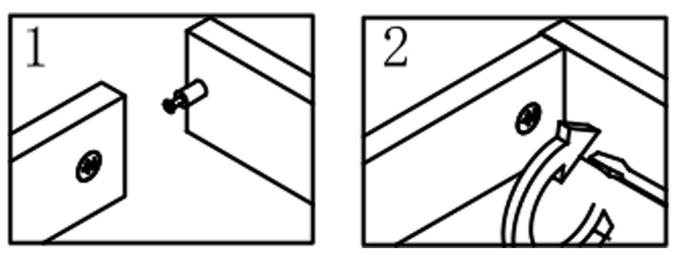

STEP 13

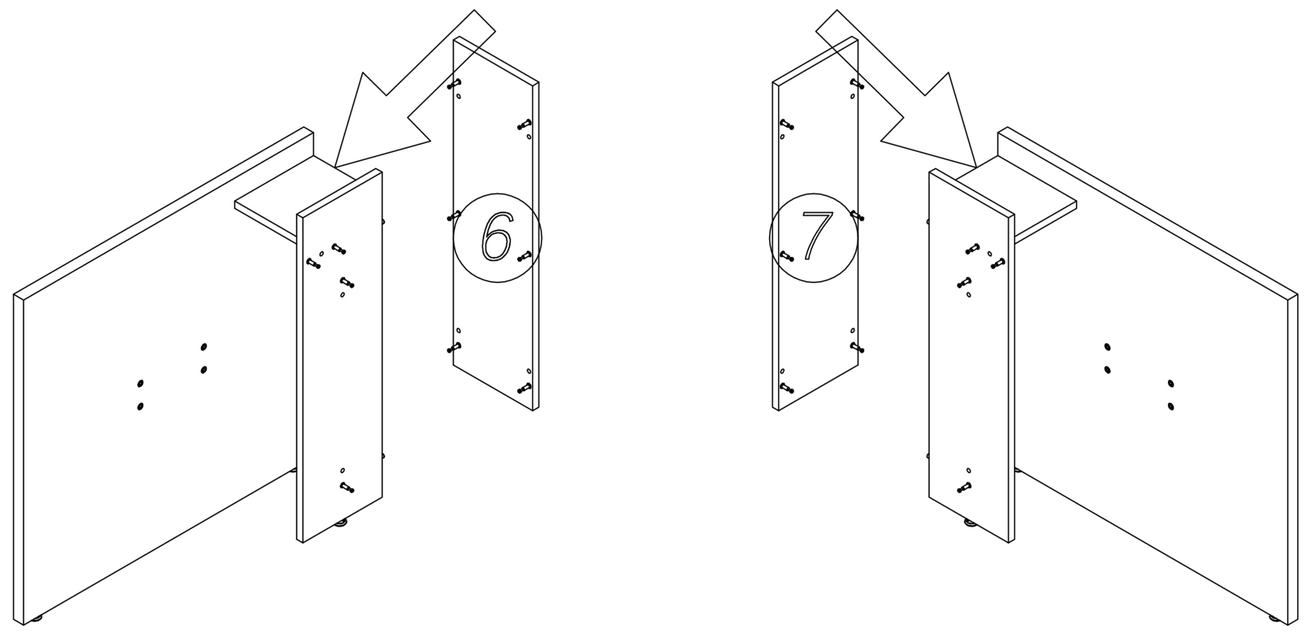

- Align the Cam bolt (in 6) with corresponding holes (in 2&8).
- Align the Cam bolt (in 7) with corresponding holes (in 3&9).
- Fasten the Cam locks clockwise.

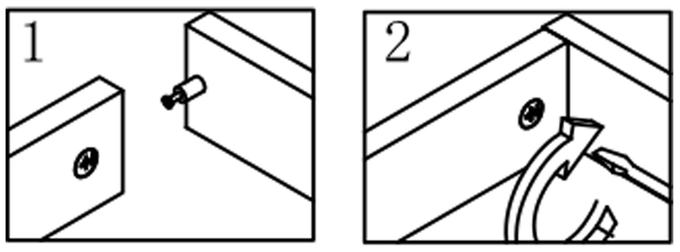

STEP 14

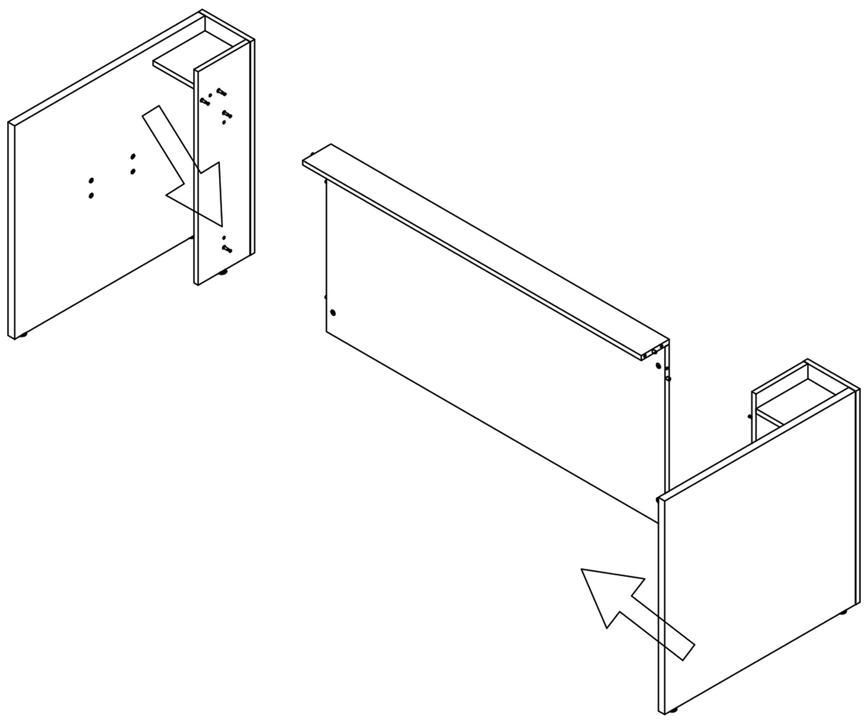

•Combine the 3 assembled parts.

•Fasten the Cam Locks clockwise.

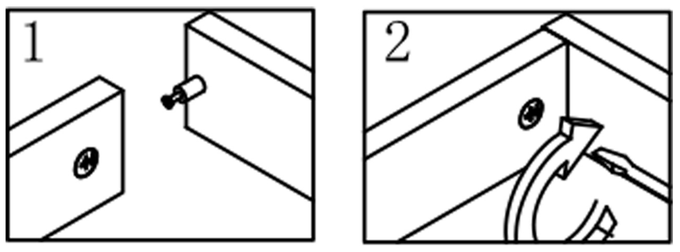

STEP 15

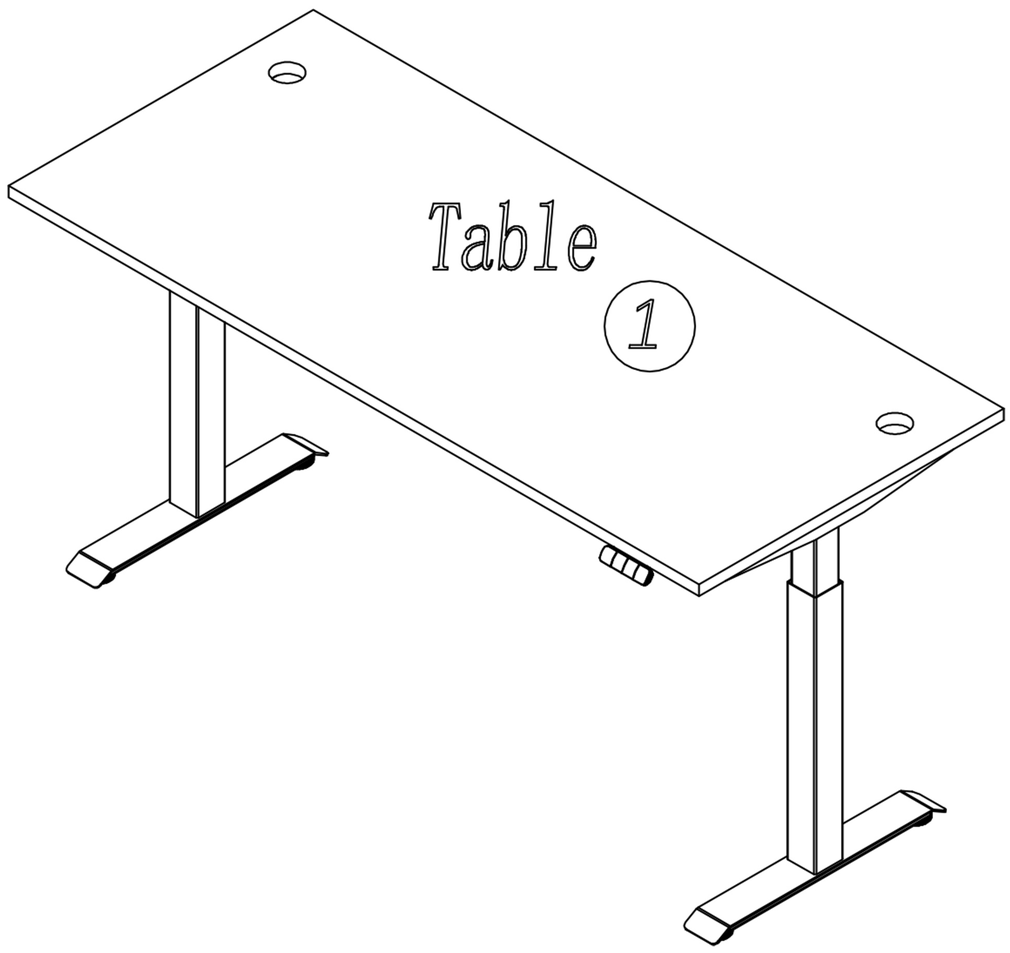

Note:

Install the table with the lifting mechanism. Check the lifting installation manual for details;

STEP 16

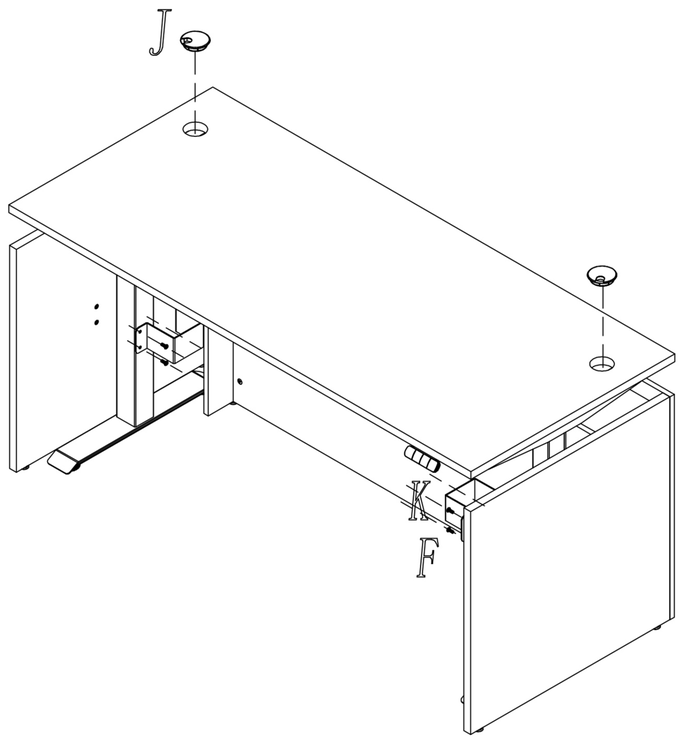

F 8 pcs

J 2 pcs

K 2 pcs

- Simple fix standing table legs and table plate legs with metal clamps

STEP 17

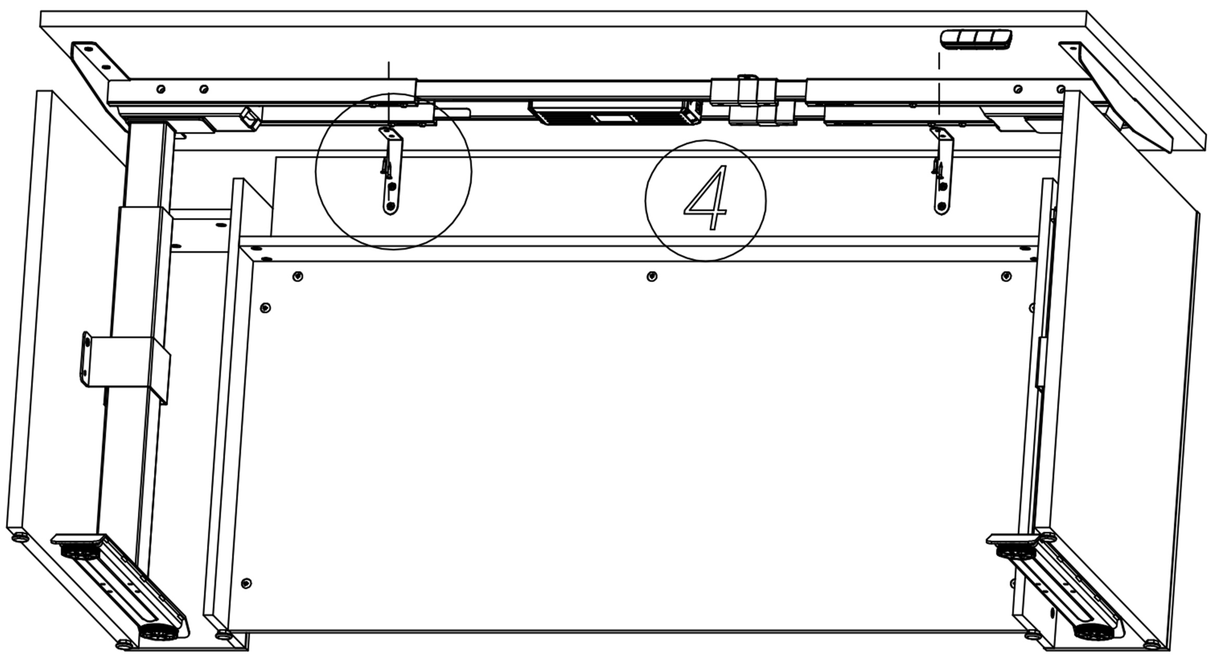

H 25 pcs

I 6 pcs

- Install the table plates (4) to the desk top plate with screws.

Use the extra screws in hardware G;

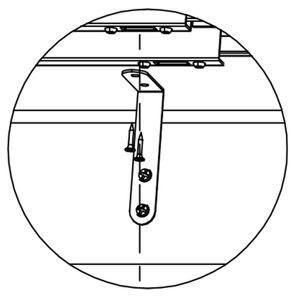

Thank you for your recent order.

We strive to provide customers with great services and satisfaction.

If any questions, please contact us.

Our customer support team is ready to help!