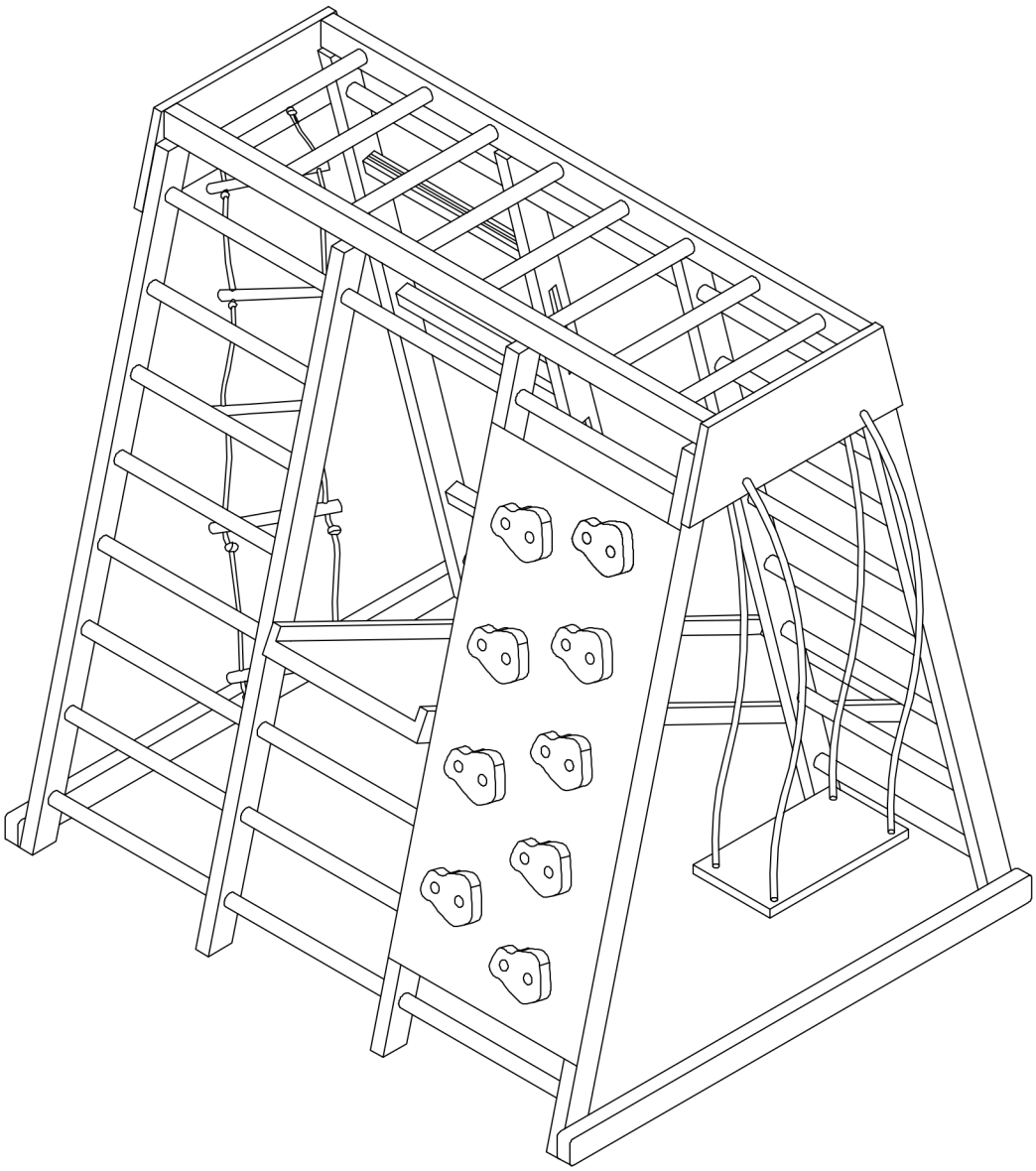

L:140x6x3.3cm ① X 1	L:137x6x3.3cm ② X 1	L:137x6x3.3cm ③ X 1	L:140x6x3.3cm ④ X 1	L:91.6x3.3x3.3cm ⑤ X3	L:48x3.3x3.3cm ⑥ X 9	L:138.4x3.3x3.3cm ⑦ X 4
L:140x6x3.3cm ⑧ X 1	L:137x6x3.3cm ⑨ X 1	L:137x6x3.3cm ⑩ X 1	L:140x6x3.3cm ⑪ X 1	L:48x3.3x3.3cm ⑫ X 2	L:48x3.3x3.3cm ⑬ X 1	L:140.4x6x3.3cm ⑭ X 2
L:40x3.3x3.3cm ⑮ X 8	L:54x20x1.8cm ⑯ X 2	L:120x6x3.3cm ⑰ X 2	L:106x49x1.8cm ⑱ X 1	L:140x40x5cm ⑲ X 1	L:40x4x1.8cm ⑳ X 1	L:30 A X 75
M8x40 B X 16	M10x40 C X 18	D X 9	Ø8x30 E X 4	M6x30 F X 2	G X 2	H X 1
I X 1	J X 2	K X 1				

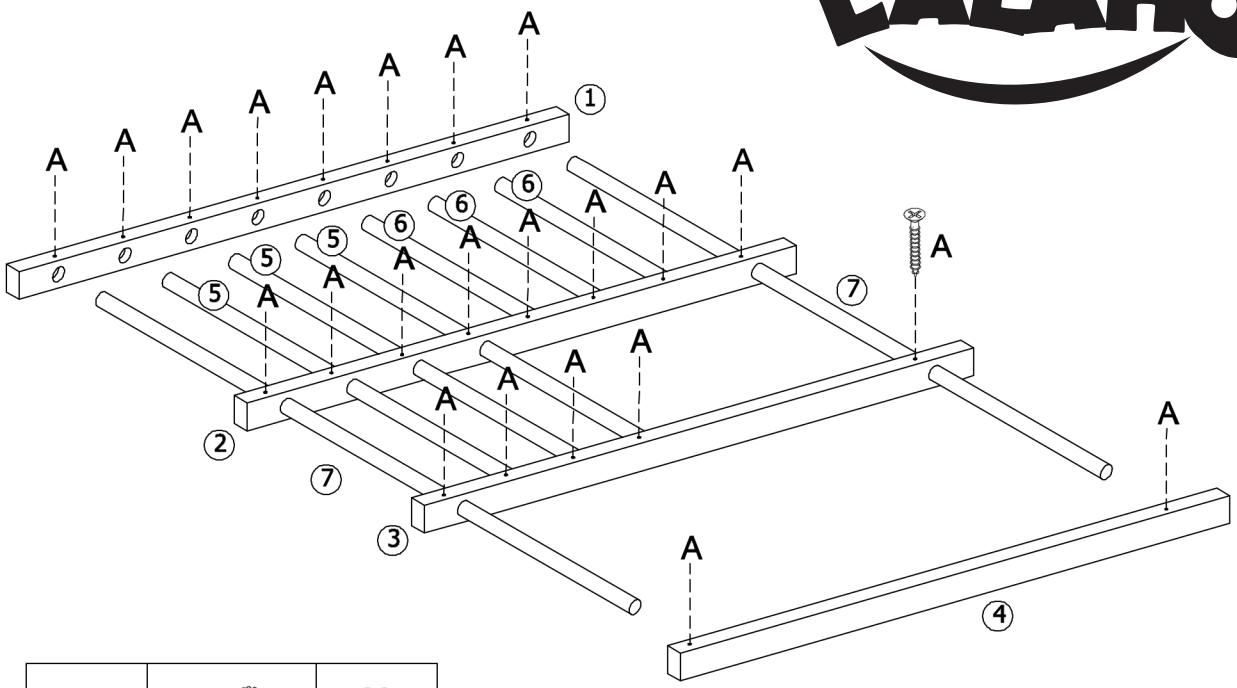

A		23

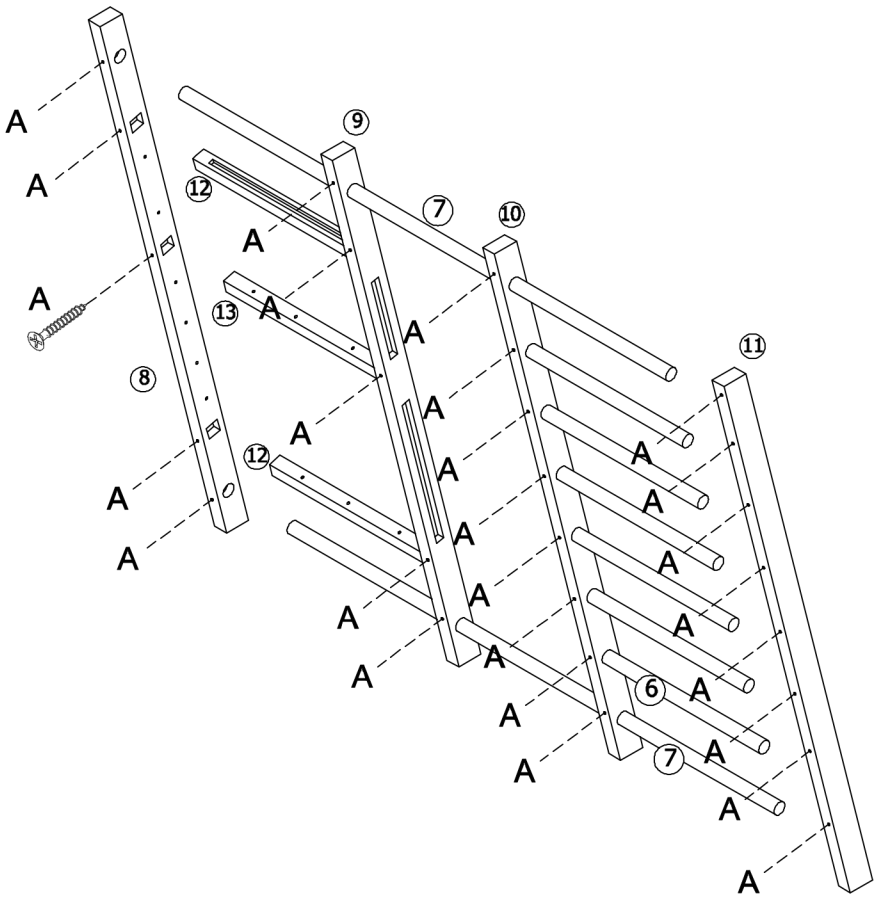

A		26

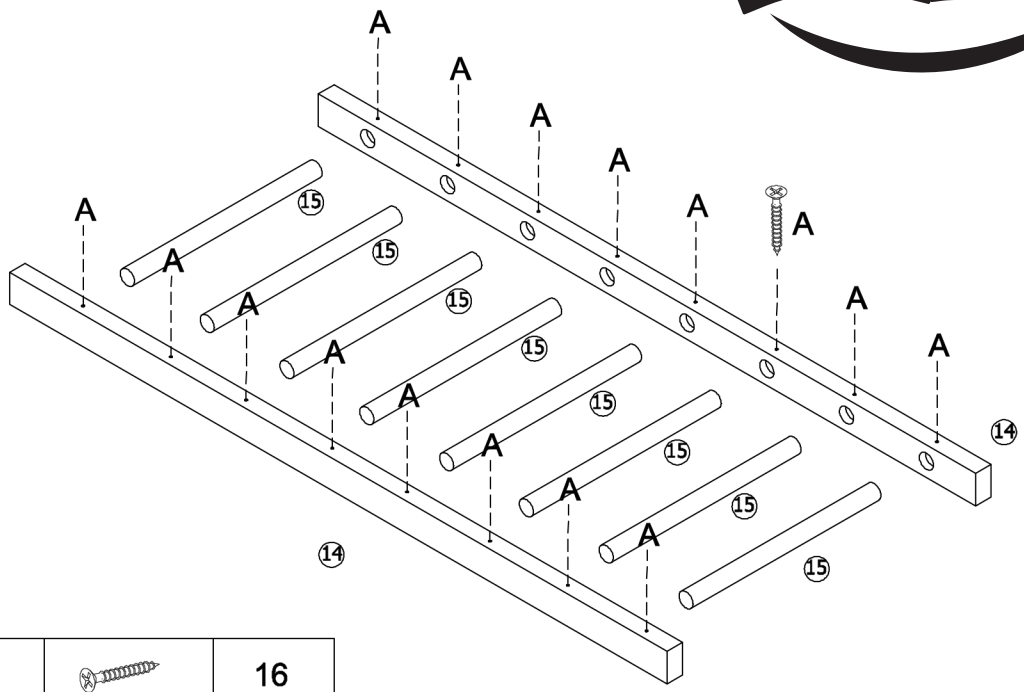

A		16

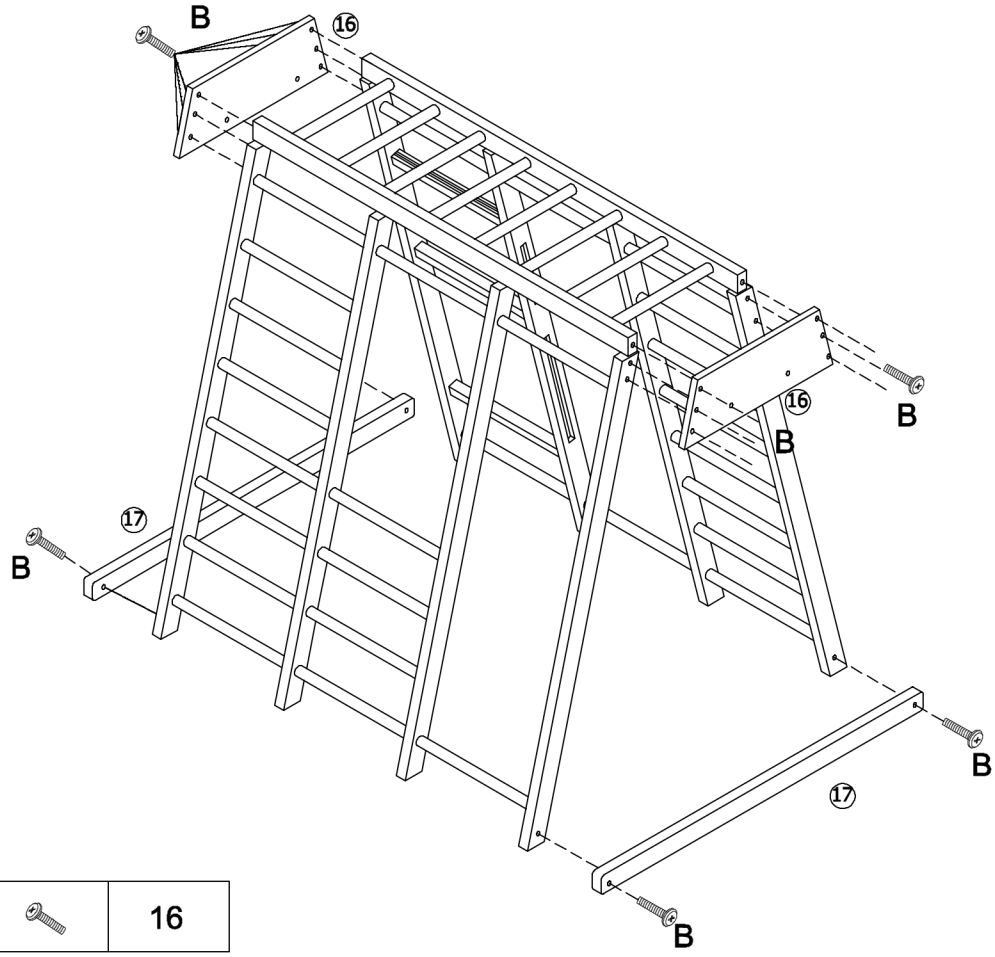

B		16

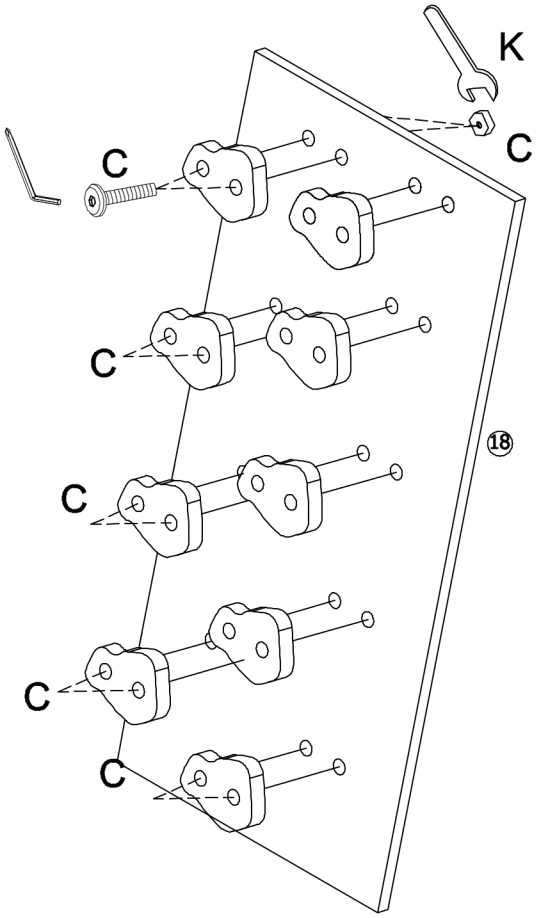

C		18
D		9
G		1
K		1

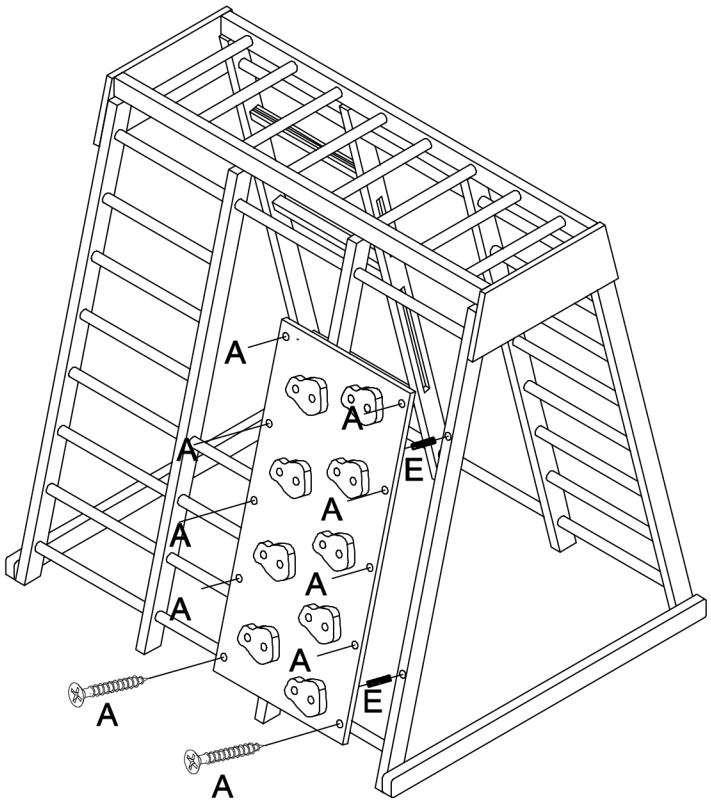

A		10
E		4

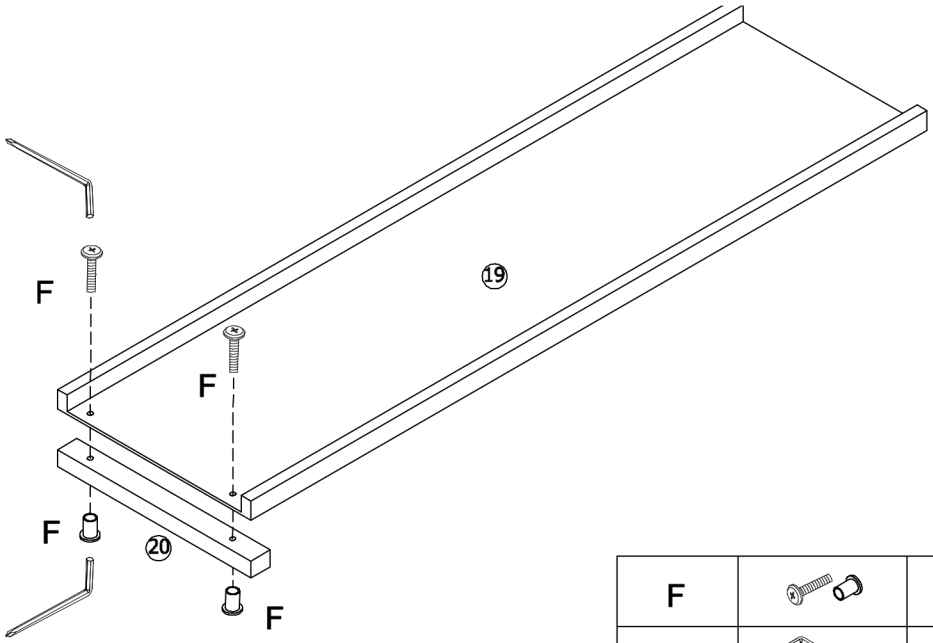

F		2
G		2

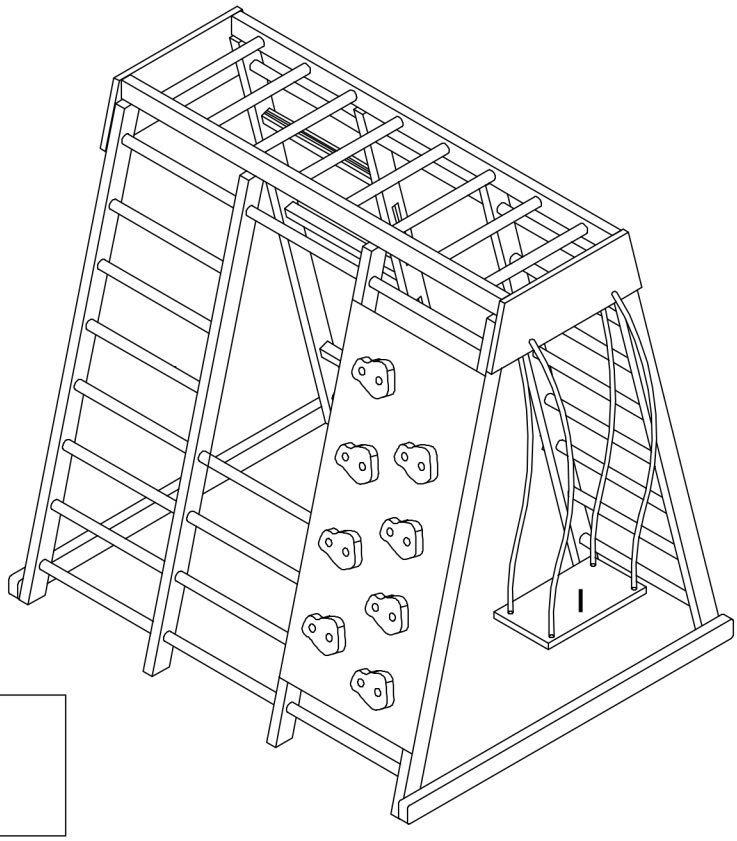

I		1

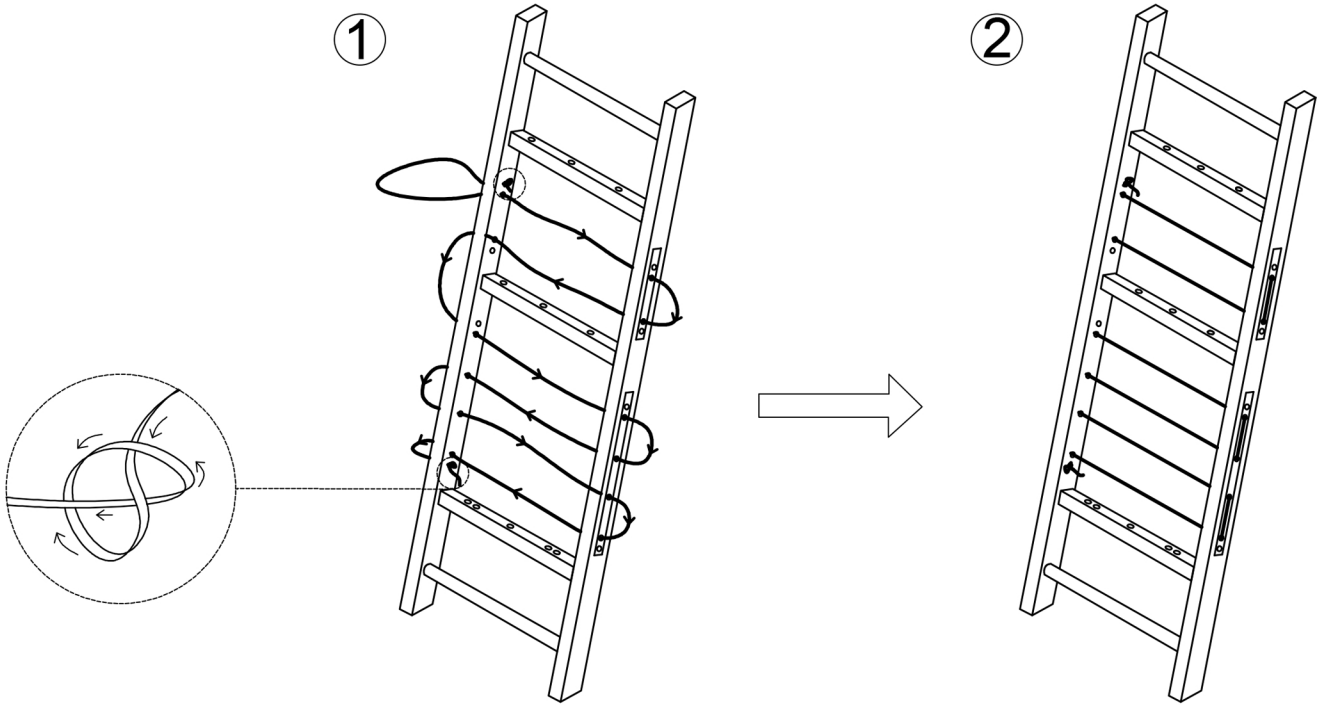
①
②

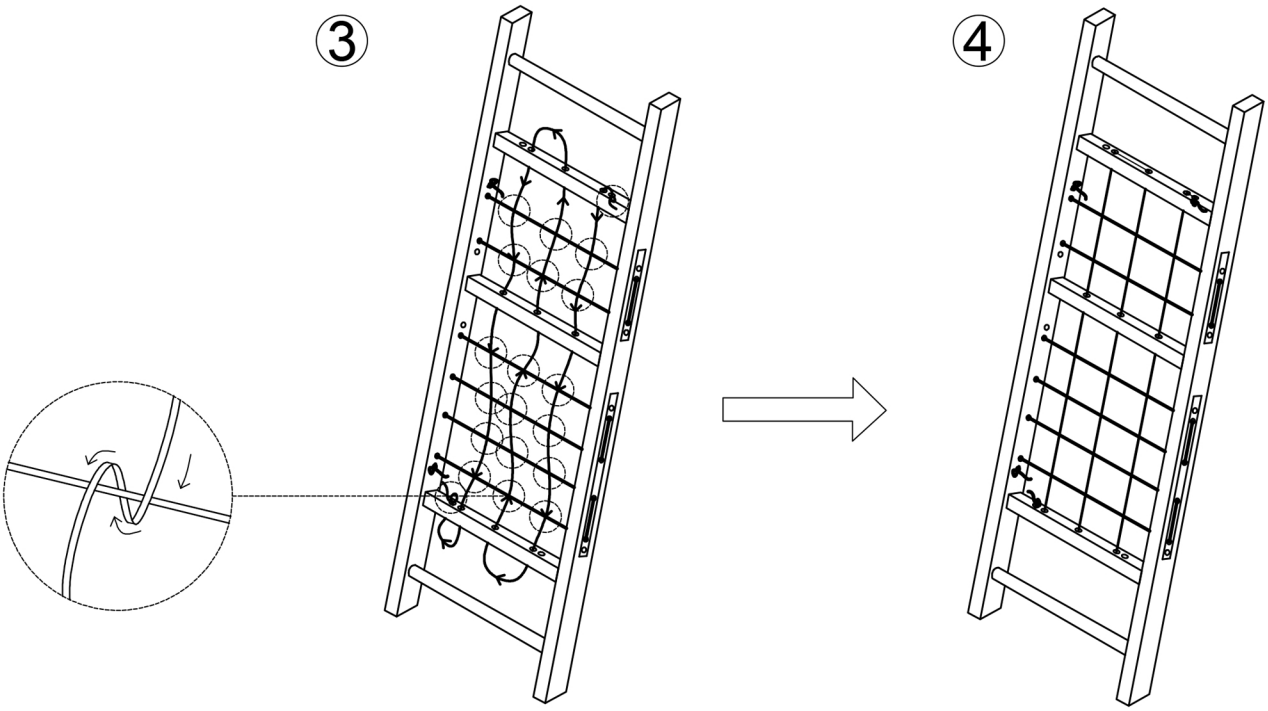
③
④

See page 7 for details

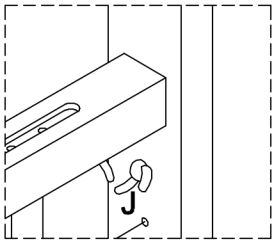
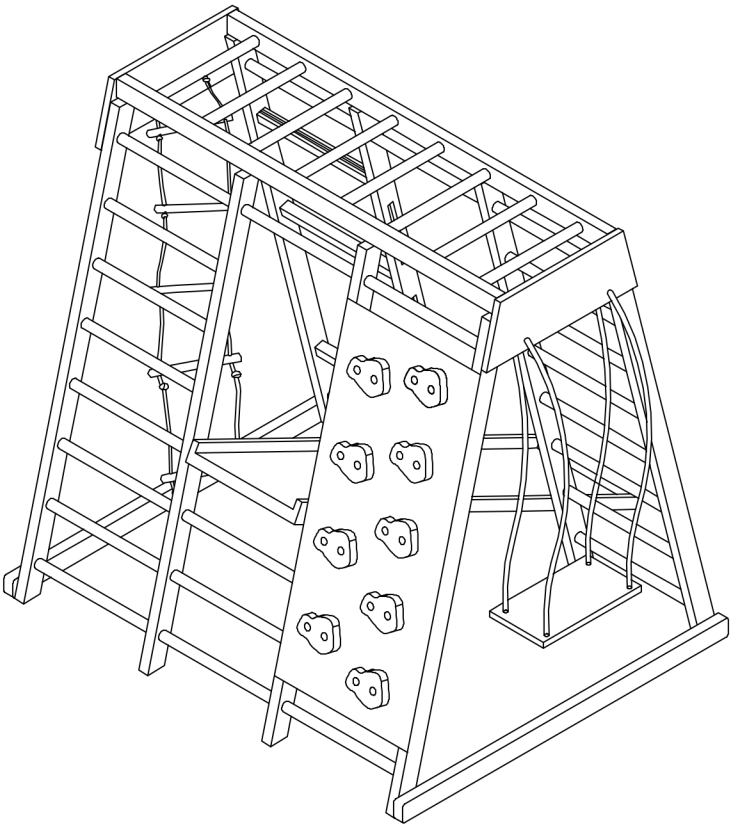
H		1
J		2