furnishing better lives together ®

WWW.JOFRAN.COM

ASSEMBLY INSTRUCTIONS & PARTS IDENTIFICATION
MODEL # 2601-84
SLATER WORKS
RECTANGLAR DINING TABLE

Thank you for purchasing this quality product. Be sure to check all packing material carefully for small parts that may have come loose inside the carton during shipment.

KEY COMPONENTS			
No.	Code	Q'ty	Description
1	NOT AVAILABLE AS A PART	4 Pcs	Table leg
2	NOT AVAILABLE AS A PART	1 Pc	Table top
3	NOT AVAILABLE AS A PART	2 Pcs	Extension Mechanism
4	2601P13L	4 Pcs	Extension lock
5	2601-84P01A	4 Pcs	Apron Spacer
6	2601P01F	4 Pcs	Floor glide

HARDWARE KIT 2601-84P01				
No.	Description			Q'ty
A		Hex nut	Ø8	8 Pcs
B		Lock washer	M8	8 Pcs
C		Flat washer	M8x18	8 Pcs
D		Key wrench	12	1 Pc

STEP 1:

- Carefully lay Table Top upside down on a smooth flat surface to prevent scratches.
- Attach each Leg to each corner of the Table Top as shown in illustration. Insert a Flat Washer, Lock Washer and Bolt on to the insert nut of each Leg (See Detail A)
- Once all Legs are in place, fully tighten nuts by turning clockwise using provided Key Wrench until secure.

DETALLE A

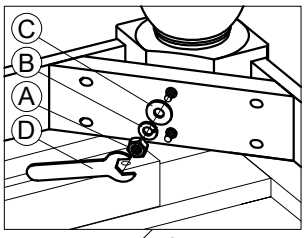

x8

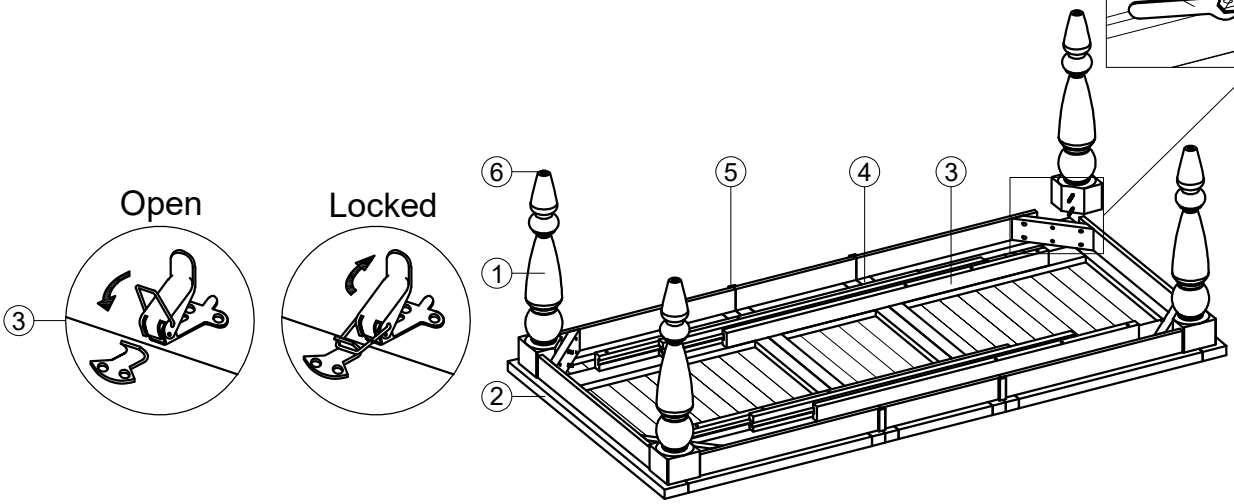

STEP 1:

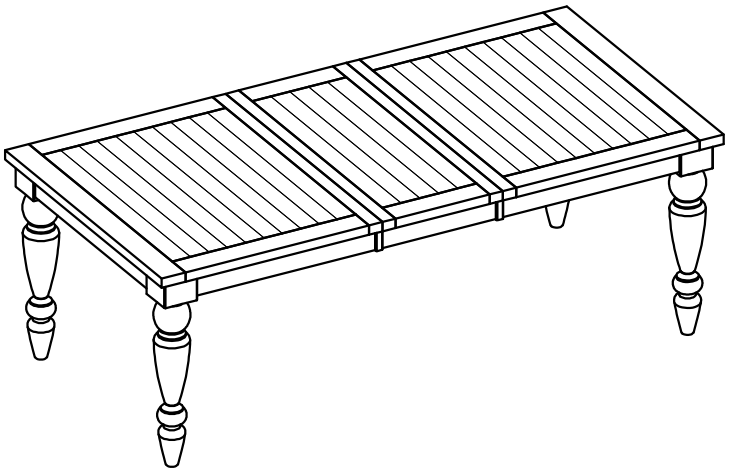

MADE IN VIETNAM

furnishing better lives together ®

WWW.JOFRAN.COM

ASSEMBLY INSTRUCTIONS & PARTS IDENTIFICATION
MODEL # 2601-410KD
SLATER WORKS UPHOLSTERED CHAIR
SLATER MILL

Thank you for purchasing this quality product. Be sure to check all packing material carefully for small parts that may have come loose inside the carton during shipment.

KEY COMPONENTS			
No.	Code	Q'ty	Description
1	NOT AVAILABLE AS A PART	1 Pc	Chair back
2	2601-410KDP41	1 Pc	Complete seat
3	2601-410KDP42	1 Pc	Right facing front leg
4	2601-410KDP43	1 Pc	Left facing front leg
5	2601-4101KDP44	1 Pc	Right facing side stretcher
6	2601-410KDP45	1 Pc	Left facing side stretcher
7	2601P01F	4 Pcs	Floor glide

HARDWARE KIT 2601-410KDP01				
No.	Description			Q'ty
A		Long bolt	Ø6x80	4 Pcs
B		Medium bolt	Ø6x60	4 Pcs
C		Short bolt	Ø6x4	3 Pcs
D		Lock washer	M8	11 Pcs
E		Flat washer	M8x18	11 Pcs
F		Allen key	K4	1 Pc
G		Screw	M4x40	4 Pcs

CLEANING INSTRUCTIONS

Fabric 100% Polyester
Cleaning Code W.
Clean only with dry cleaning solvent.
Do not saturate. Do not use water.
Pile fabrics may require brushing to restore appearance.
Cushion covers should not be removed and dry cleaned.

DO NOT use power tools to assembly.

IN ORDER FOR THE BOLTS TO ALIGN PROPERLY, FOLLOW THE INSTRUCTIONS BELOW

STEP 1:

- Carefully lay Chair Back flat on a smooth flat surface to prevent scratches.
- Attach Complete Seat to Chair Back by inserting a Flat Washer, Lock Washer and Short bolt into each of the hole on the back of the seat. Tighten screws with provided Allen Key by turning clockwise until secure. (See Detail A).
- Insert a Flat Washer, Lock Washer an Long bolt into each of 2 holes in the Complete Seat corners. Tighten screws with provided Key Wrench. (See Detail B).

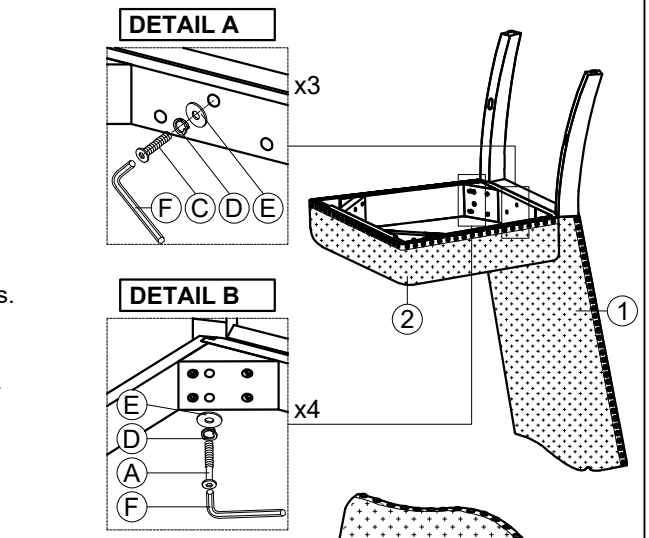

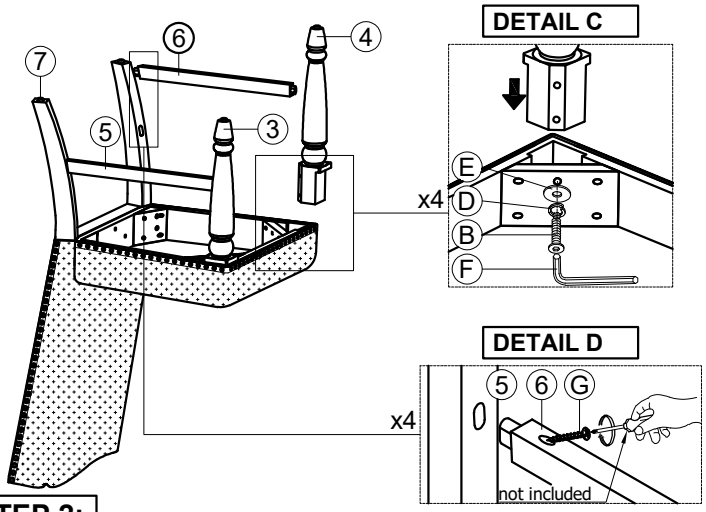

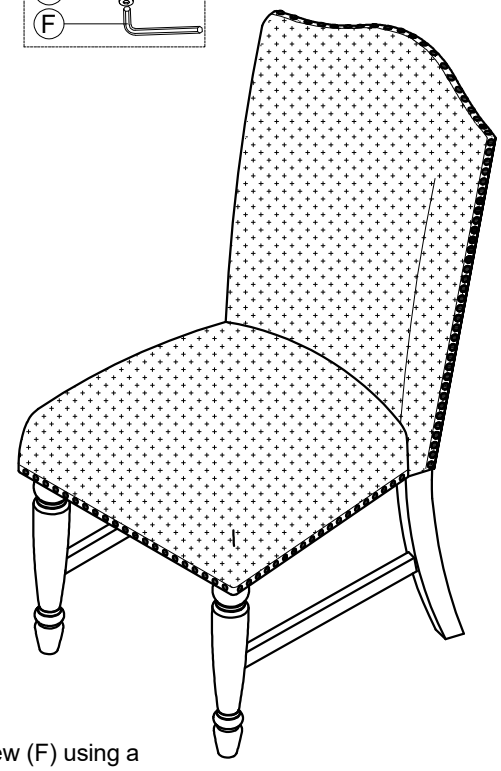

STEP 2:

- Carefully turn chair upside down and attach each Leg to the front corners of the Complete Seat. Place Flat Washer, Lock Washer and Nut on each leg bolt, tightening the Nut on each Leg using provided Allen Key. (See Detail C).
- Be sure to level the chair prior to tightening all the nuts/screws.
- Insert 2 Side Stretchers between the Front Legs, fasten by hand with Wood Screw (F) using a phillíp-head screwdriver. (not provided). (See Detail D).

Once in place, tighten all the leg bolts.

MADE IN VIETNAM