YN-1329 LOVE SEAT

Thank you for purchasing the our **SOFA**

Before you start, here are some helpful advice:

1. We suggest you spend a short time reading through this leaflet and then follow the simple step-by-step instructions.
2. Owing to the size and weight of the sofa, we recommend that it is assembled by two adults, on a carpeted or padded area, in the room that it is intended for. Approximate assembly time: 20 minutes.
3. Please do not use any tools other than those provided or recommended in these instructions.
4. Please do not throw away any of the packaging or the instruction until you have checked all the components and hardware and the furniture is fully assembled. Please ensure that the packaging is disposed of in a safe and environmentally friendly way.
5. Assemble all components loosely until advised to tighten. Depending on use, it may be necessary to tighten the components from time to time, so please save the tools that have been provided.
6. Please keep all pieces out of reach of children.
7. If you have any questions about the product: please send an email to our dedicated customer service email, and we will reply to your questions within 12 hours.

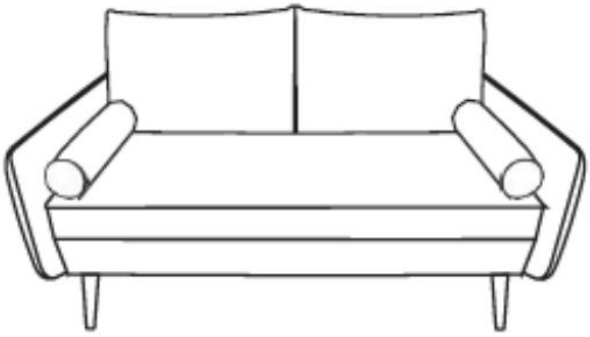

Hardware:

A.		Screw 5*35mm	x16
B.		Allen Wrench	x1
C.	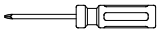	Screw driver	x1

*** Not include hardware bag**

Components:

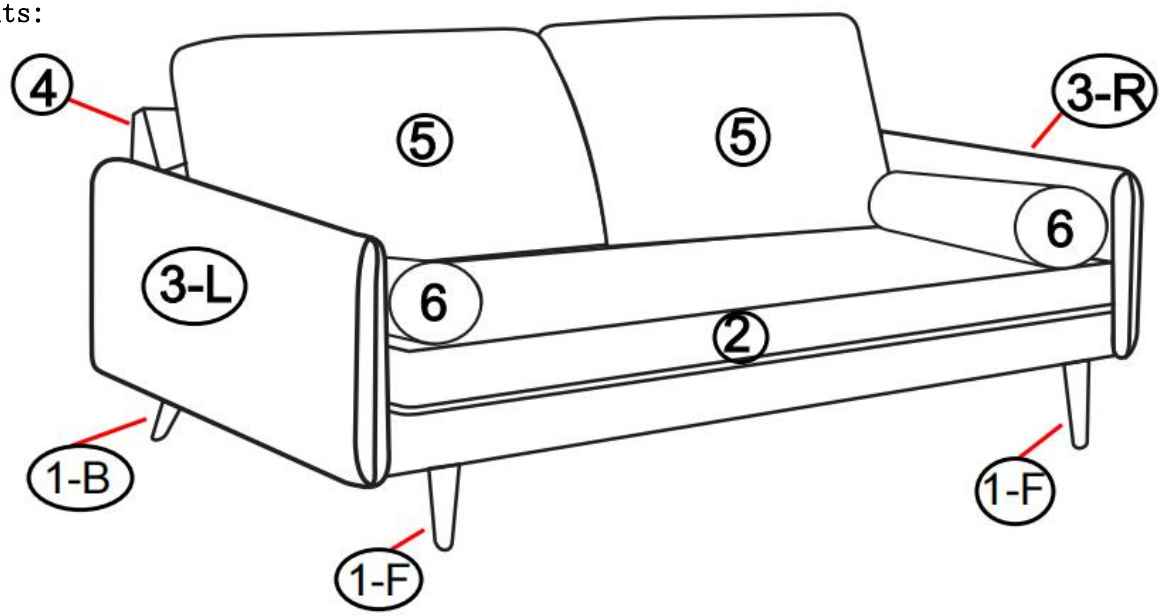

YN-1329 LOVE SEAT

1-F. Front Leg x2	1-B. Back leg x2	2. Sofa Seat x1	3-L. Left Arm x1
3-R. Right Arm x1	4. Sofa Back x1	5. Back Cushion x2	6. Pillows x2

STEP 1:

1. Please put **Sofa Seat (2)** upside down on a carpeted or padded surface.
2. Open the Velcro on the bottom of the **Sofa Seat (2)** and take out 1 piece of **Left Arm (3-L)**, 2 pieces of **Front Legs (1-F)**, 2 pieces of **Back Legs (1-B)**, 2 pieces of **Back Cushions (5)** and hardware bag.

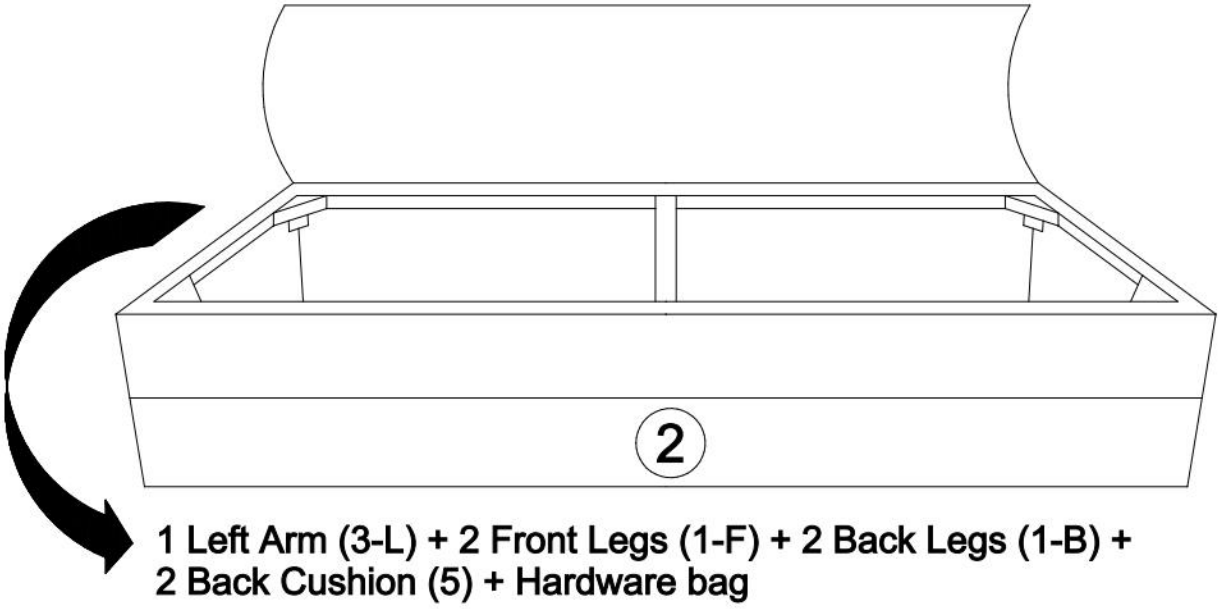

STEP 2:

1. Use **Allen Wrench (B)** or **Screw driver (C)** to tighten 4 pieces of **Screws (A)** from the pre-drilled holes of the **Legs (1)** into the **Sofa Seat (2)** clockwise as shown. Each **Front leg (1-F)** needs 4 pieces of **Screws (A)**.
2. Use **Allen Wrench (B)** or **Screw driver (C)** to tighten 4 pieces of **Screws (A)** from the pre-drilled holes of the **Legs (1)** into the **Sofa Seat (2)** clockwise as shown. Each **Back leg (1-B)** needs 4 pieces of **Screws (A)**.

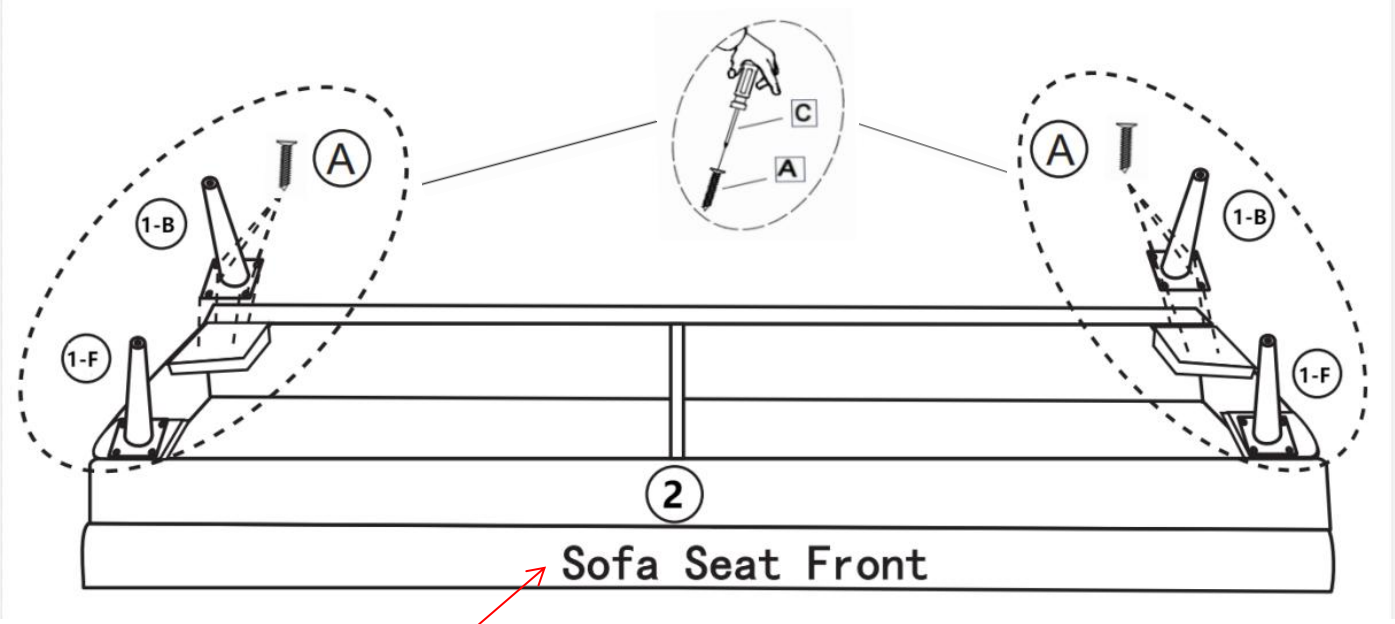

The Sofa Seat Front is the same fabric with fabric cover.

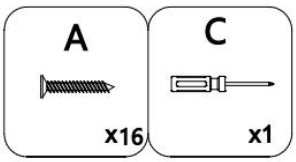

Hardware & Tools Required

STEP 3:

1. Please carefully turn over **Sofa Seat (2).**
2. Insert **Left Arm (3-L)** and **Right Arm (3-R)** to **Sofa Seat (2)** by using the pre-installed Clips on **Sofa Seat (2), Left Arm (3-L)** and **Right Arm (3-R)** to lock each other as shown.

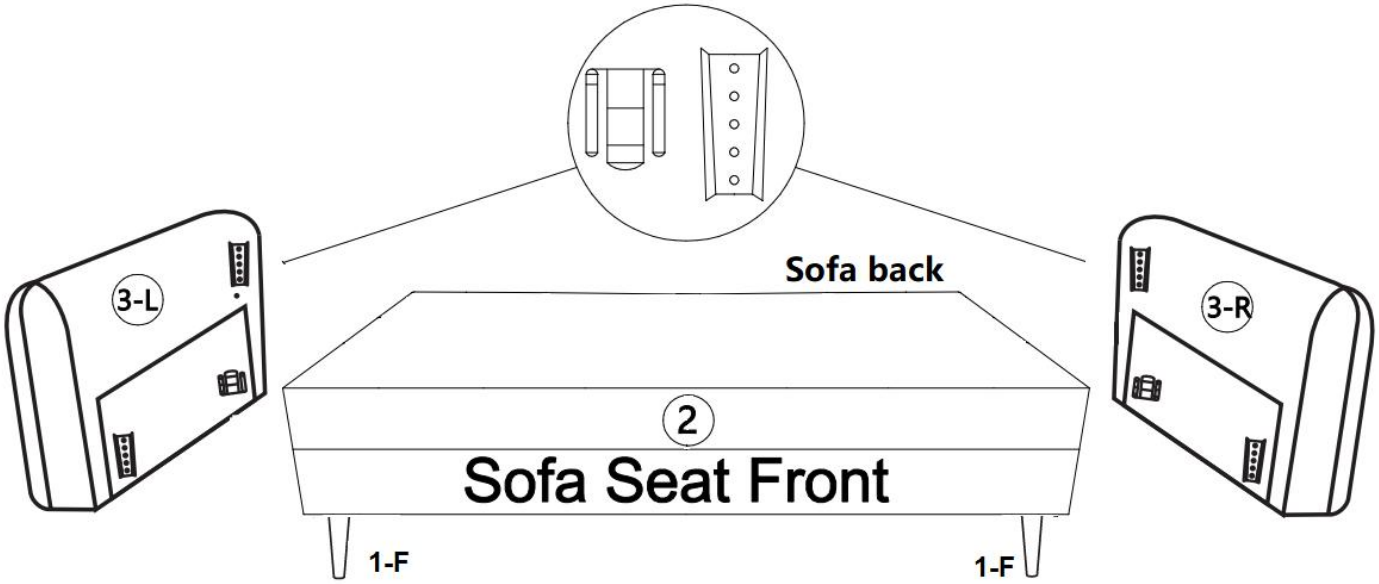

STEP 4:

1. Place **Sofa Back (4)** to the assembled **Sofa Seat (2)**, **Left Arm (3-L)** and **Right Arm (3-R)** as shown.
2. Insert **Sofa Back (4)** to **Left Arm (3-L)** and **Right Arm (3-R)** by using the pre-installed Clips on **Left Arm (3-L)**, **Right Arm (3-R)** and **Sofa Back (4)** to lock each other as shown.

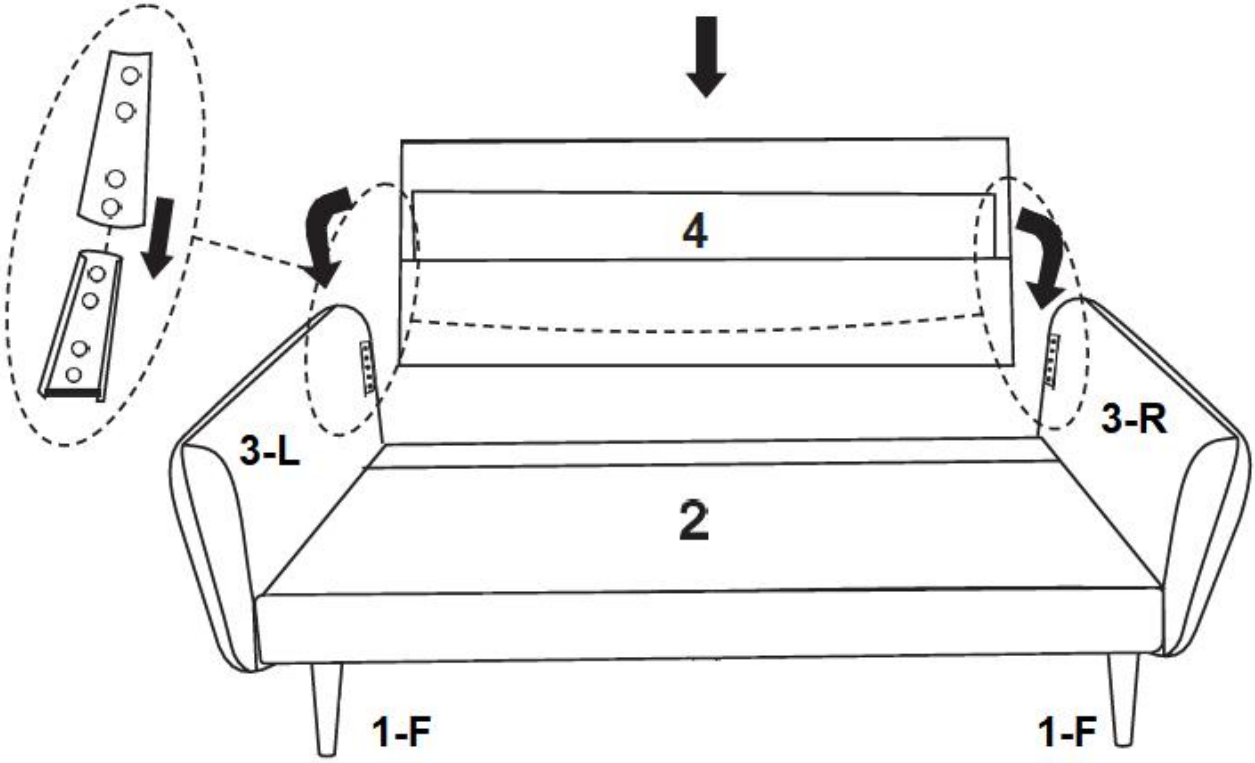

STEP 5

Carefully put 2 pieces of **Back Cushion (5)** and 2 pieces of **Pillows (6)** to the assembled **Sofa Seat (2)**, **Left Arm (3-L), Right Arm (3-R)** and **Sofa Back (4)** as shown.

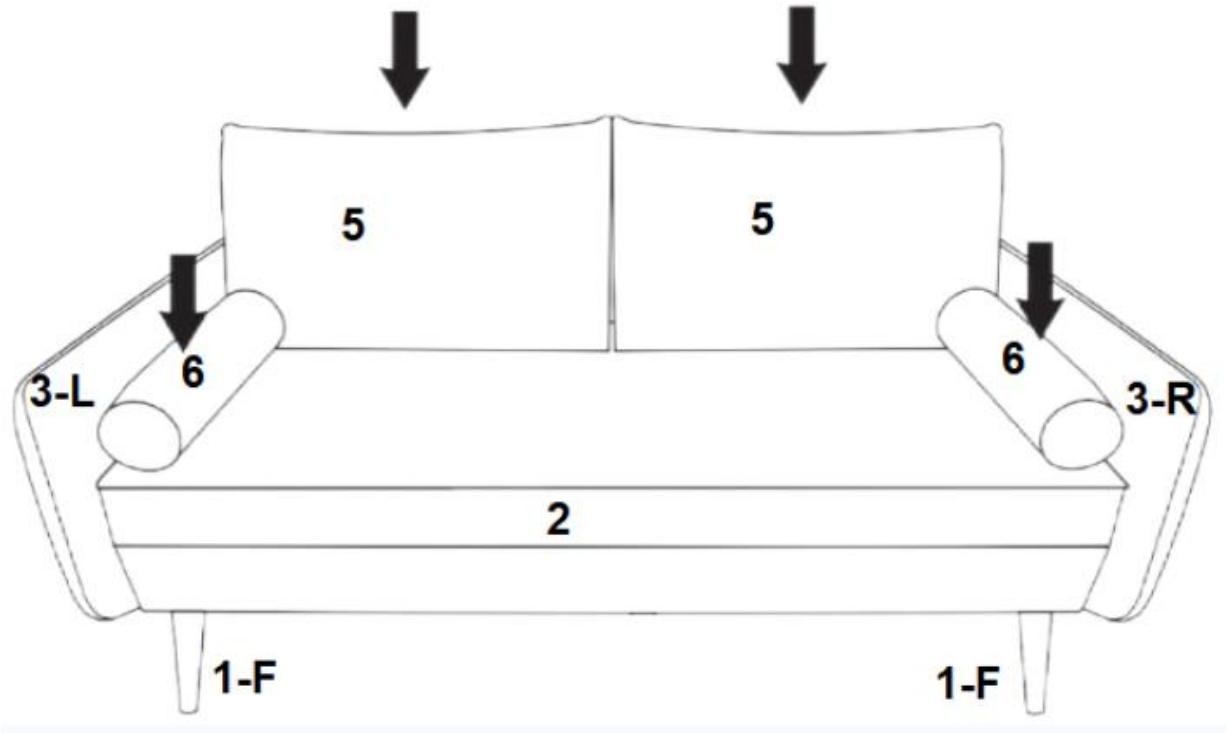
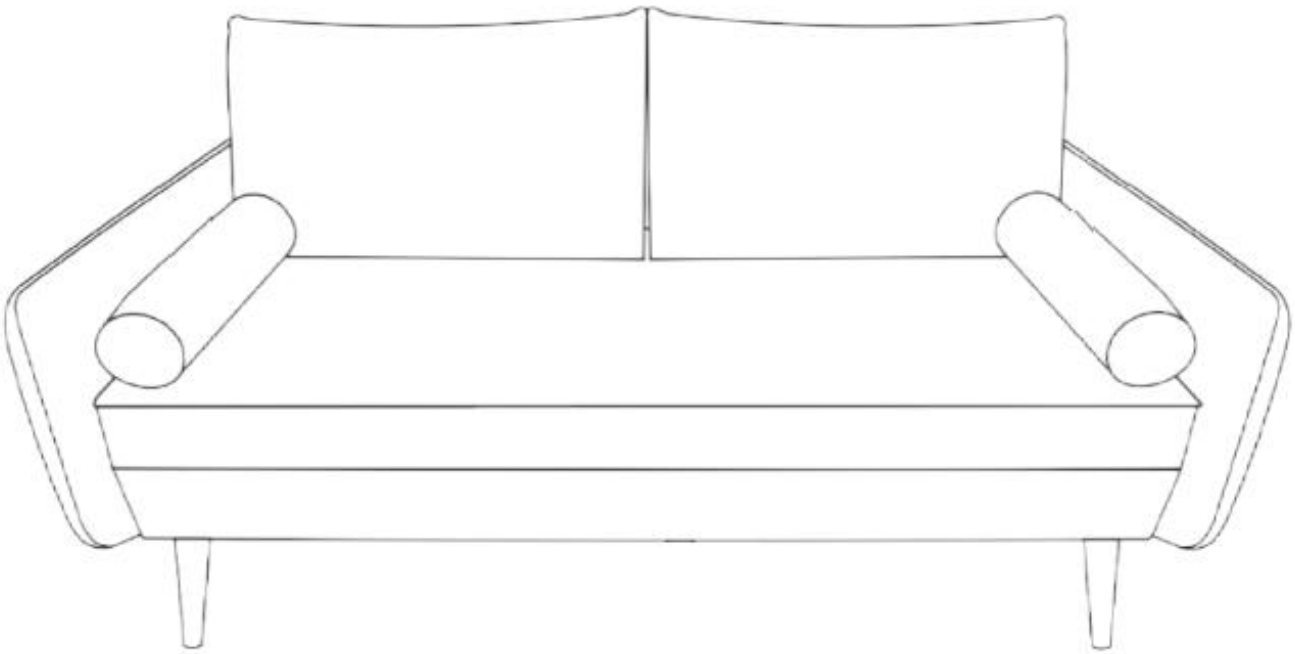
Thank you for the assembly. The assembly is complete. Your sofa is ready to enjoy now -- From FDL