Thank you for choosing a **Palace Imports** product.

Your complete satisfaction is our top priority.

Customer Service and Warranty Information

- **For Warranty Assistance:**
  If you experience any issues or require additional information regarding your warranty, please do not contact the place of urchase. Instead, reach out directly to our Customer Service Team at info@palaceimportsinc.com or visit our website at www.palaceimportsinc.com for prompt support.

- **Warranty Coverage:**
  PALACE IMPORTS warrants its products to the original purchaser against defects in materials or workmanship. A defect is defined as any flaw that impairs the normal use of the product. This warranty is limited to the replacement of defective parts or components and is valid for one (1) year from the date of purchase.

- **Warranty Limitations:**
  This warranty covers products used under normal household conditions. It does not apply to furniture used outdoors or damage resulting from improper assembly or disassembly, product modification, intentional damage, accidents, misuse, exposure to elements, or any labor or assembly costs.

- **Additional Terms:**
  PALACE IMPORTS reserves the right to require proof of purchase to process any warranty claim. We are not liable for any incidental or consequential damages arising from the misuse of our products.

Palace
Imports
100% Wood Furniture

ASSEMBLY GUIDE
16.5" Unit

SKU 9101 - White
SKU 9103 - Mocha
SKU 9105 - Gray
SKU 9107 - Black
SKU 9108 - Teal
SKU 910-10 - Yellow
SKU 910-11 - Aqua
SKU 910-12 - Green
SKU 910-13 - Sage
SKU 910-14 - Beige
SKU 910-15 - Navy Blue
SKU 910-16 - Antique Blue

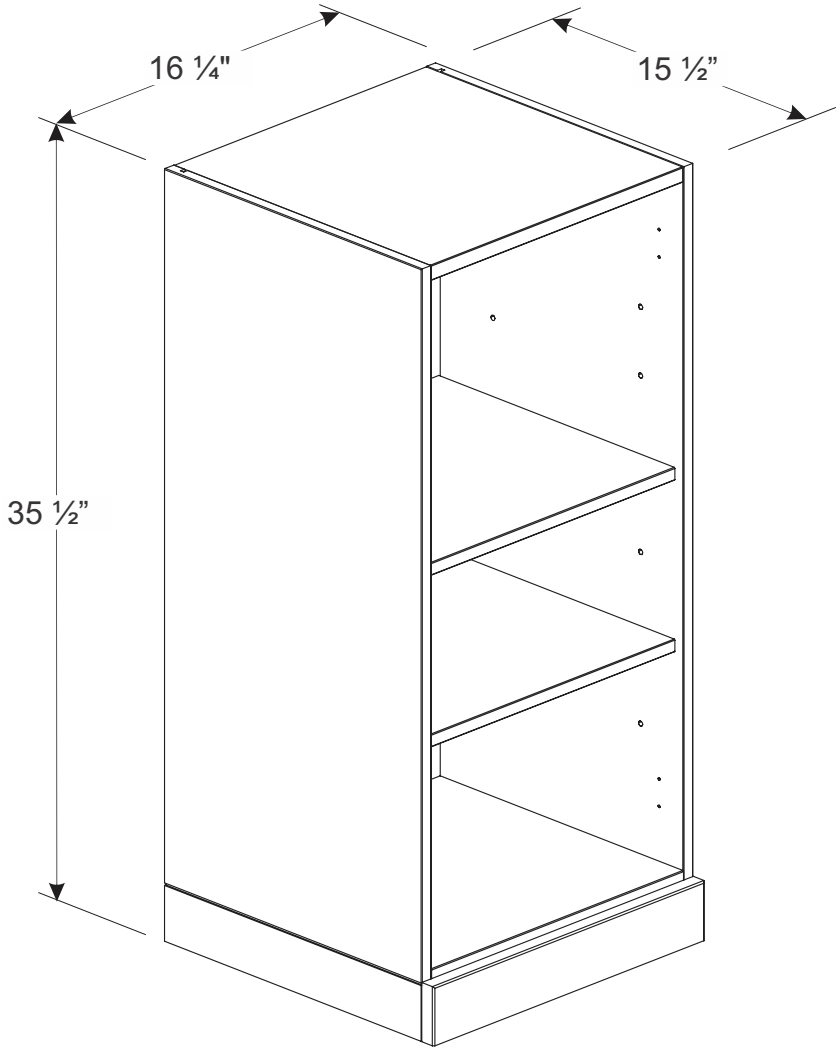

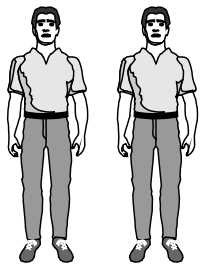

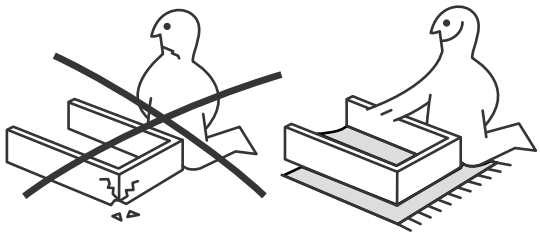

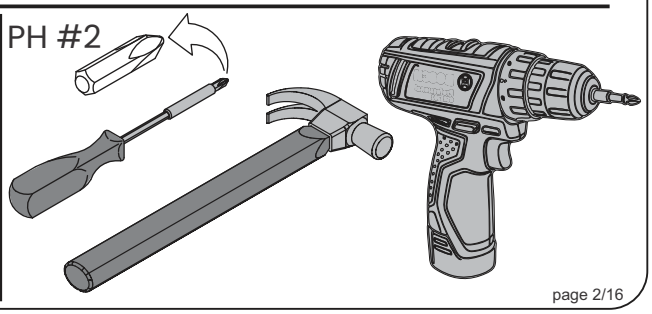

Before You Begin Assembly

- Carefully inspect the package contents. A complete parts checklist is provided below.
- If any parts are missing or damaged, please contact us at info@palaceimportsinc.com for assistance.

Assembly Tips

- Assemble the item on a flat, smooth surface. We recommend placing a blanket or protective covering underneath to prevent scratches.
- Use a power drill **only at a low-speed setting** to avoid damaging components.
- Assemble the product as close as possible to its final location to minimize the need for moving it later.
- Important: The hardware pack contains small parts that may pose a choking hazard.
  Keep all small items out of reach of young children.

PARTS LAYOUT

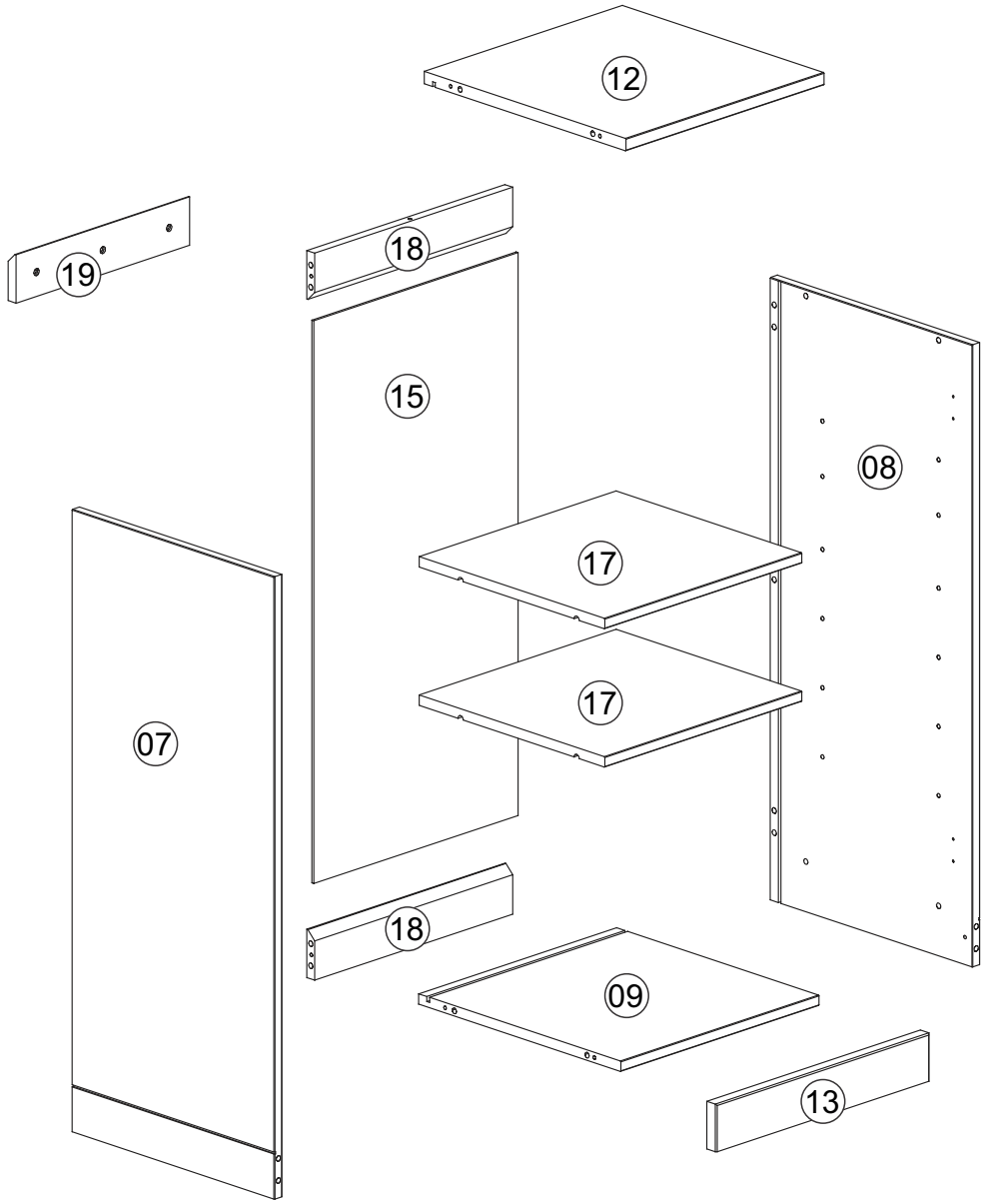

Screws Are Illustrated at Actual Size for Accurate Reference

A1	4,0x30	14+1
A44	3,5x14	14+1
C2	8,0x25	20+1
D4	Ø6x8	08+1
D57	18x17x2,5	03
D58	66x35x1,2	01
D59	32x14x19	02

WARNING:
CHOKING HAZARD

Contains small parts - choking hazard.
Adult supervision is required during assembly.
Not suitable for children under 3 years of age.

WARNING:

Important Safety Notice:

This furniture includes tip-over prevention hardware, which MUST be securely attached to the wall as outlined in the assembly instructions. Failure to do so may result in serious injury or death.

TIPOVER RESTRAINT KIT		
A47	3,0x20	02+1
F8	47x20x9	02
F15	300mm	01

01)

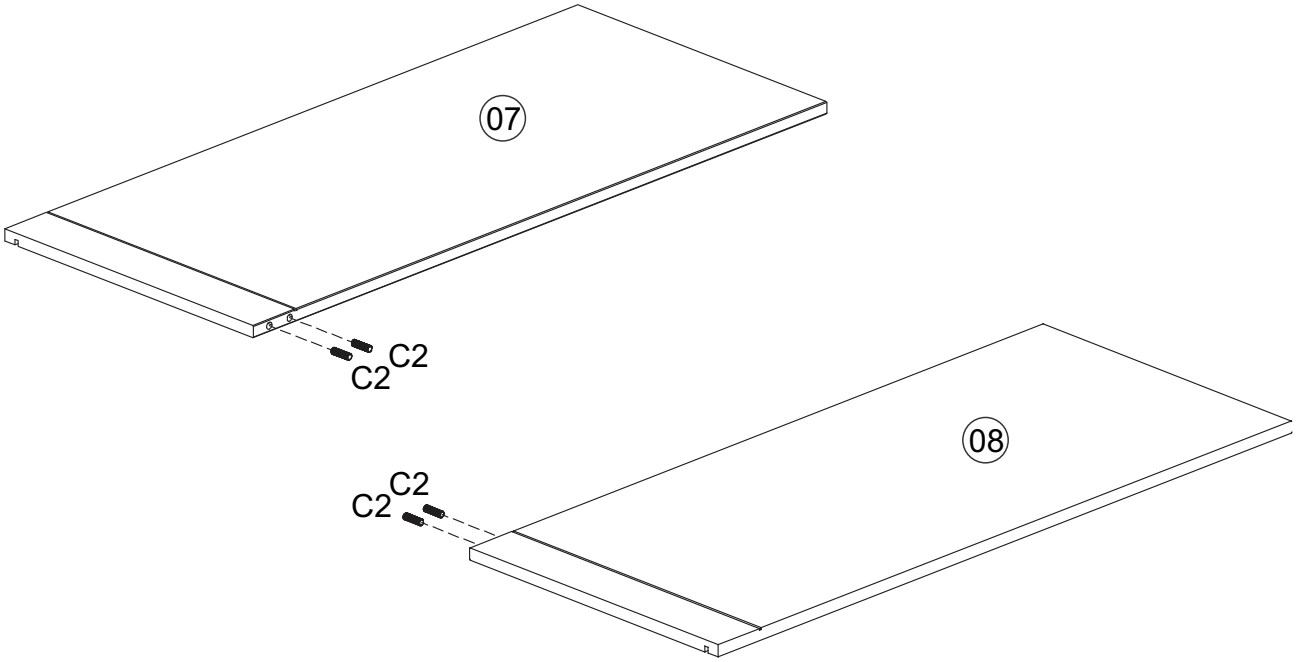

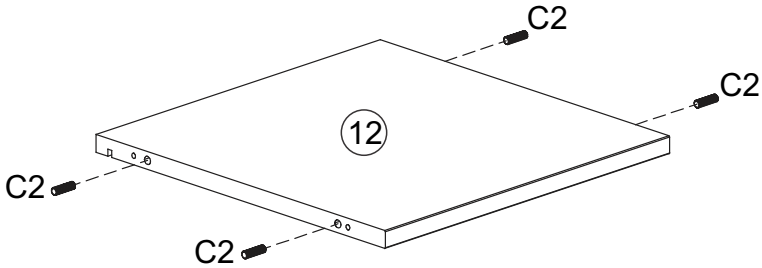

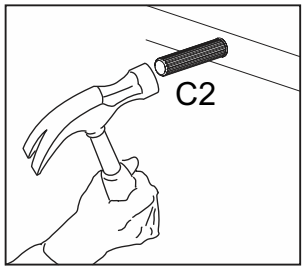

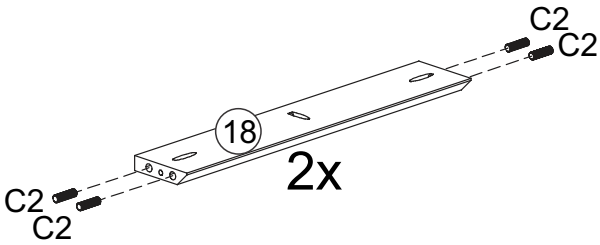

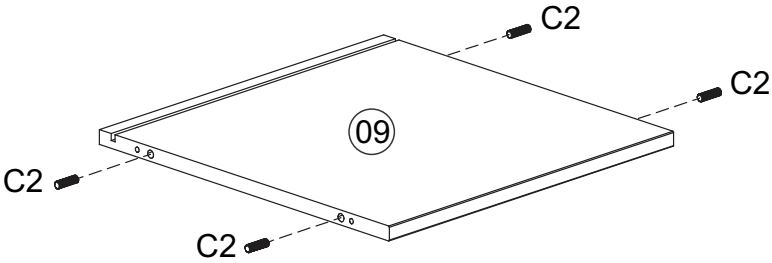

C2	8,0x25	20

02)

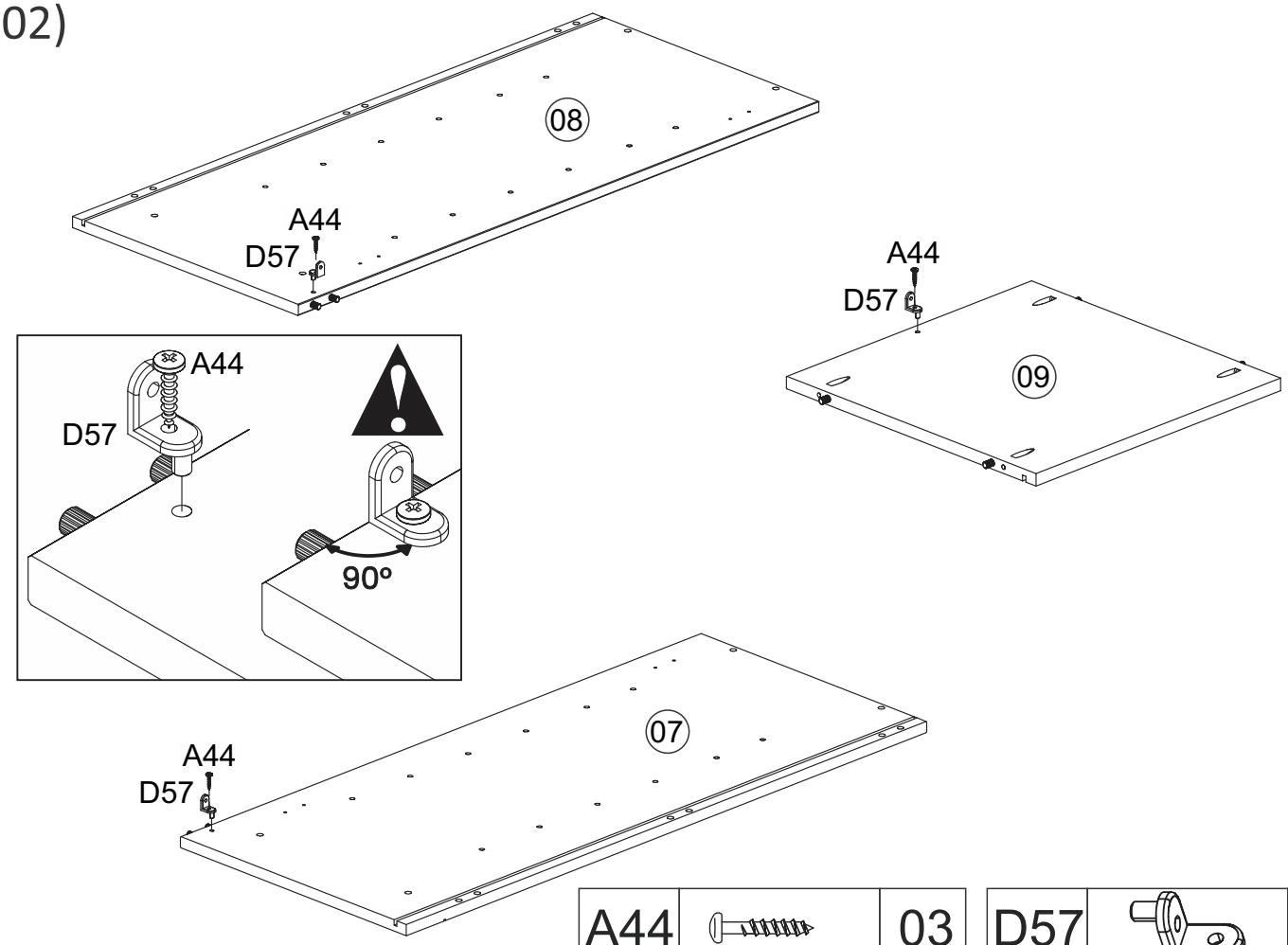

A44	3,5x14	03	D57		03

03)

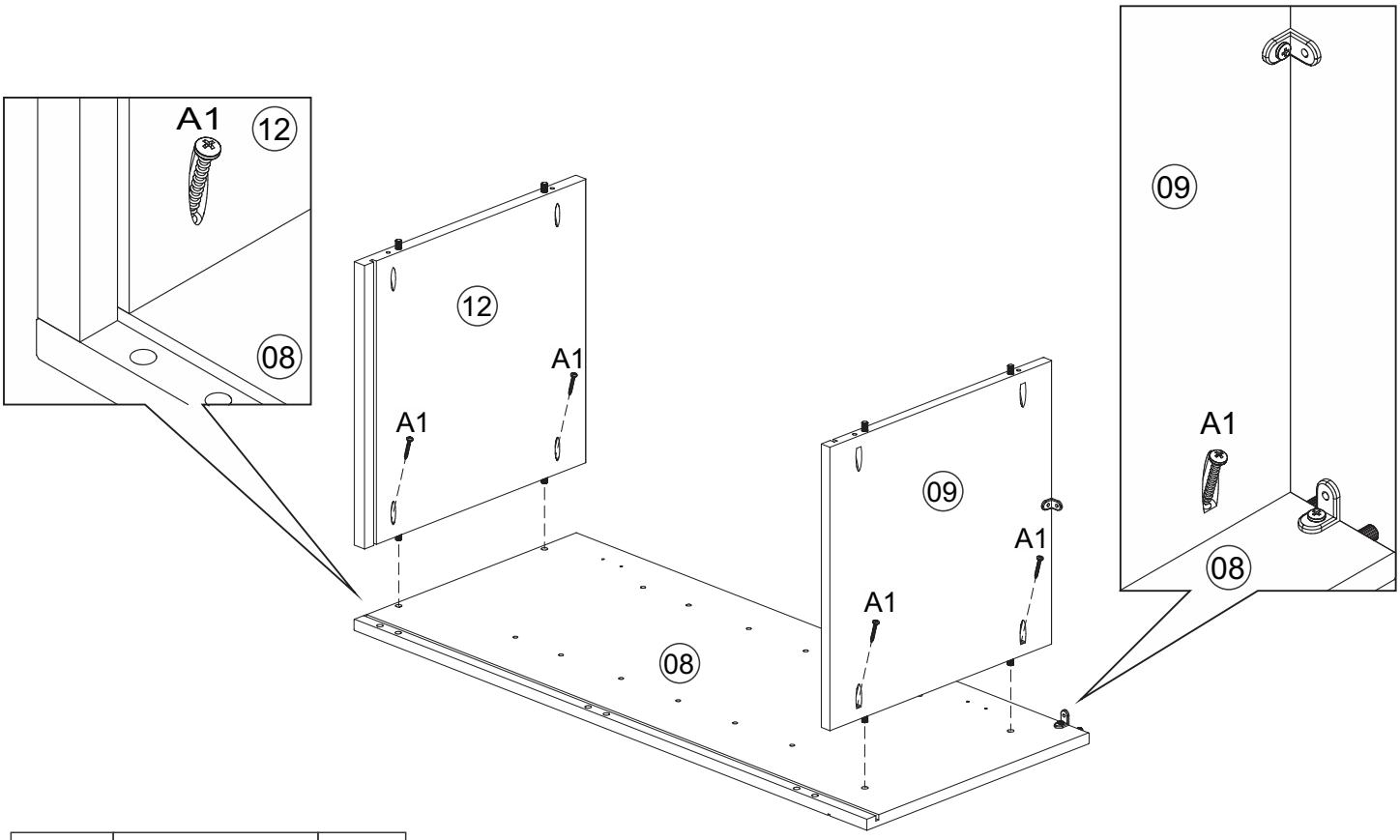

A1	4,0x30	04

04)

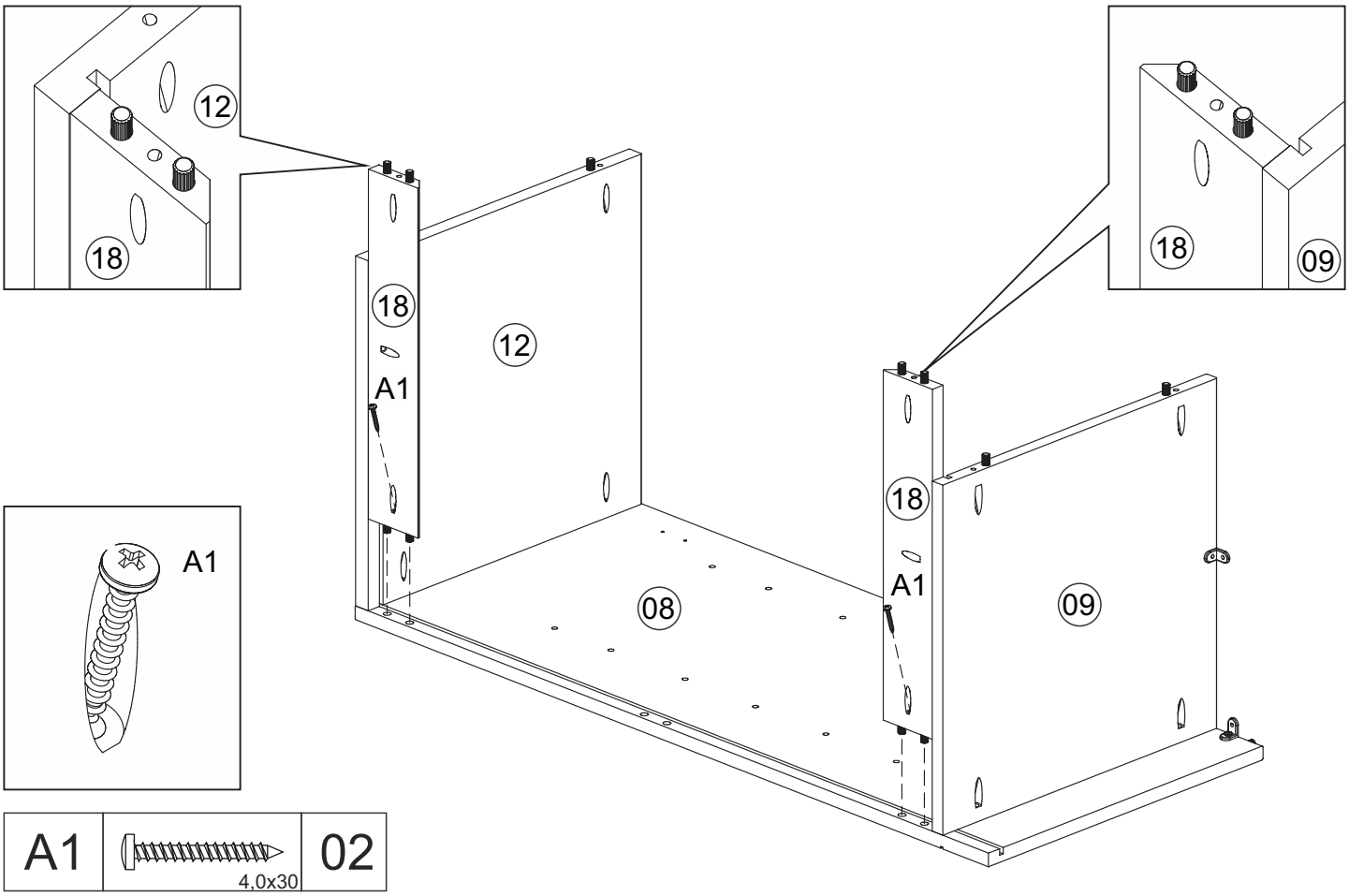

A1	4,0x30	02

05)

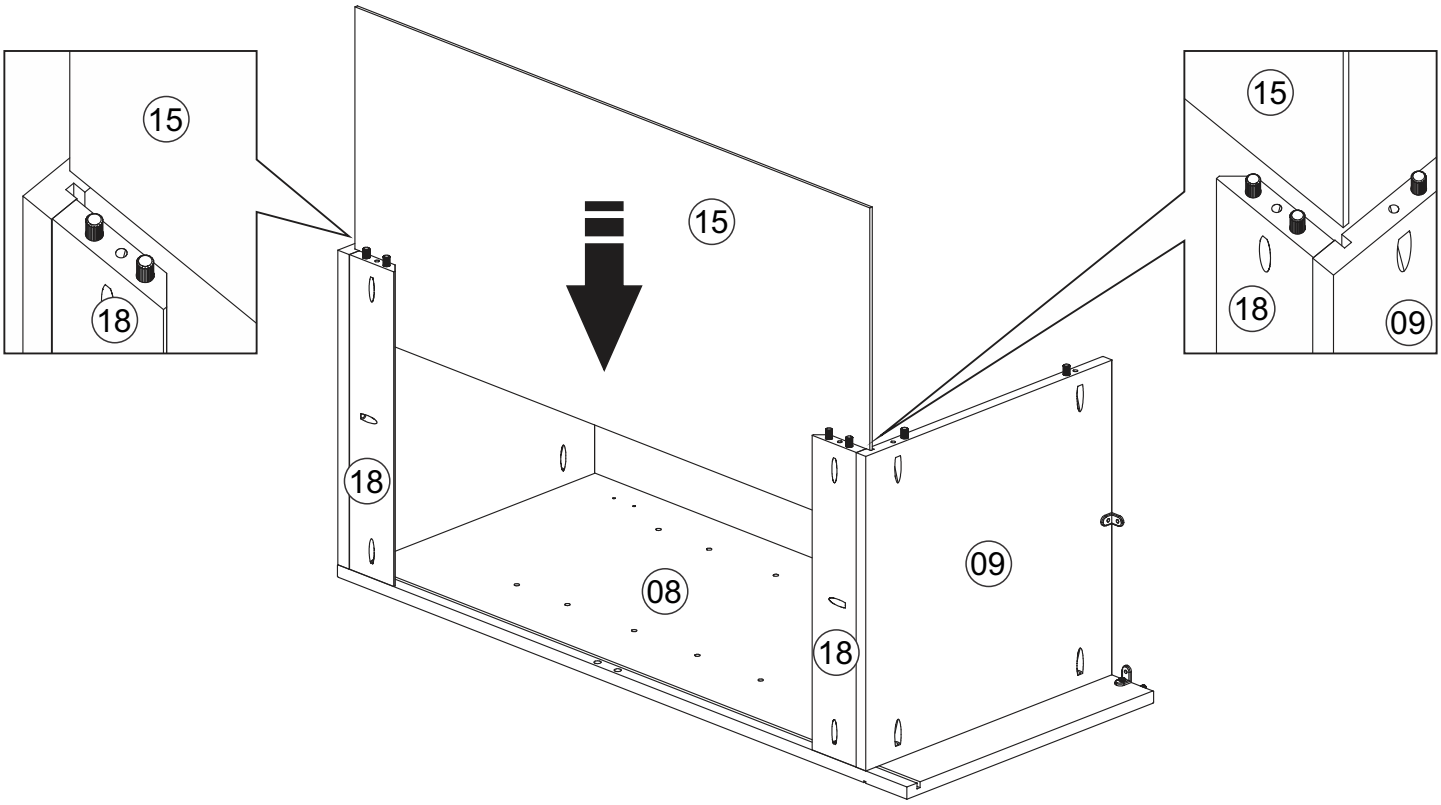

06)

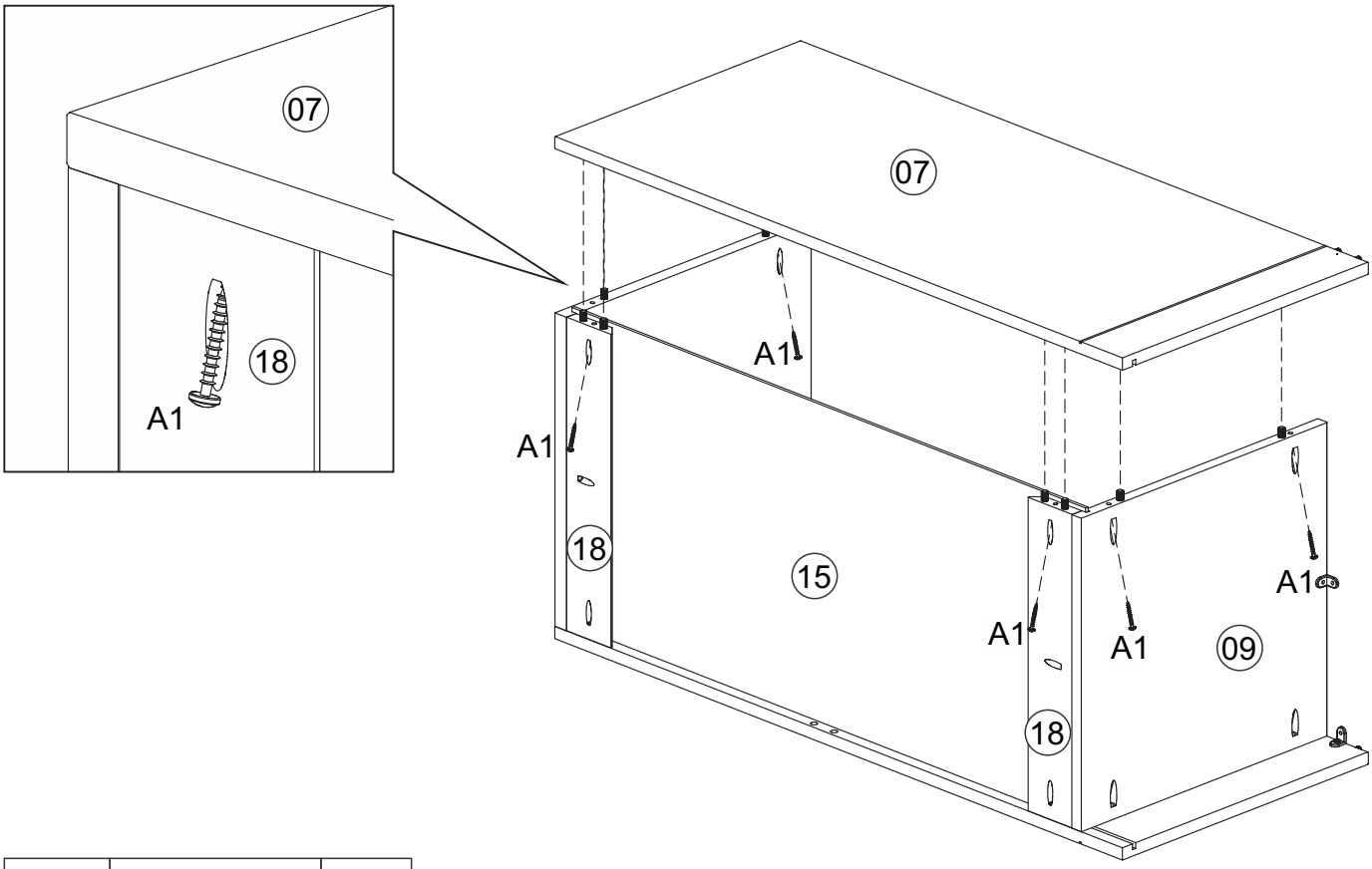

A1	4,0x30	06

07)

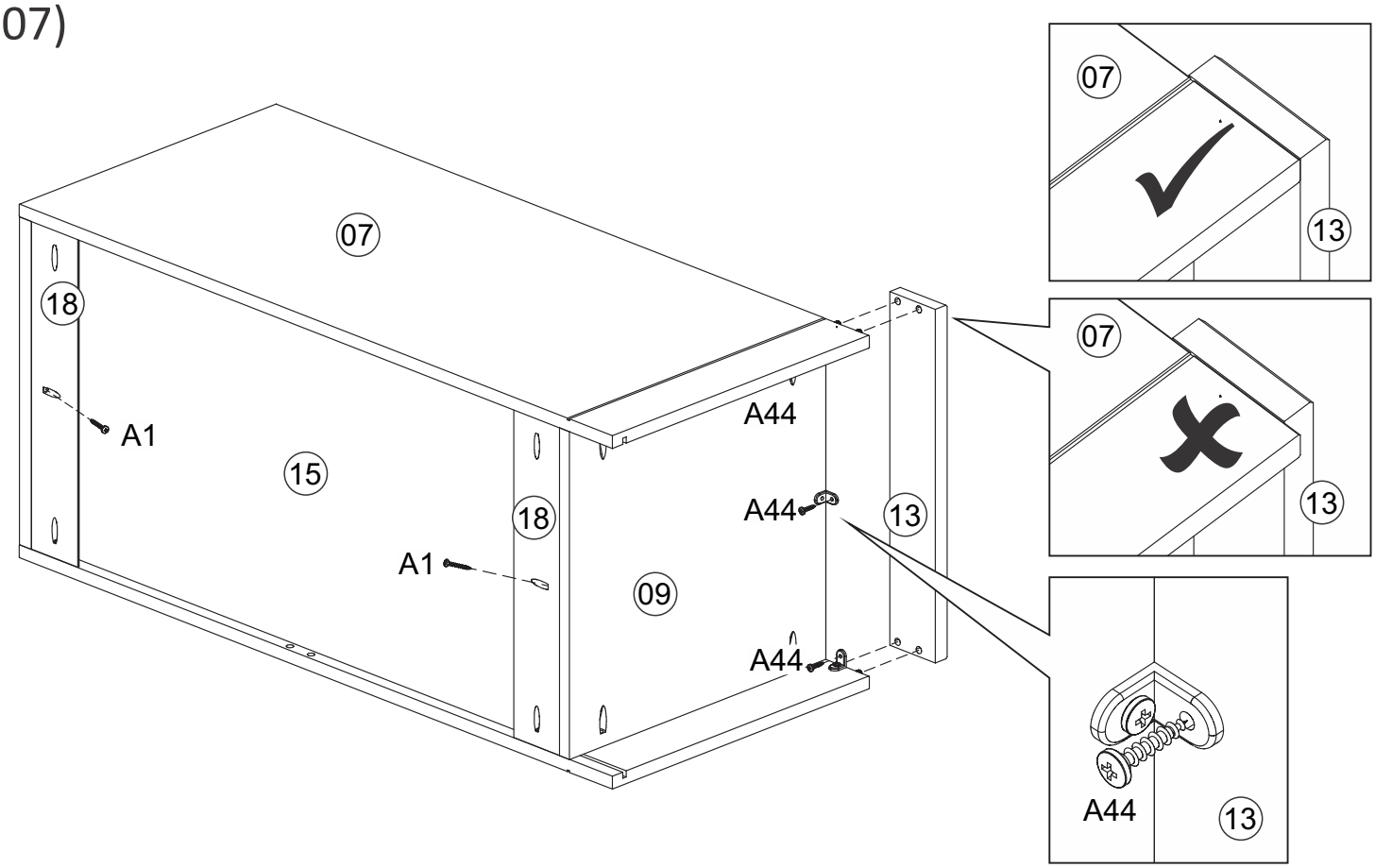

A1	4,0x30	02

A44	3,5x14	03

08)

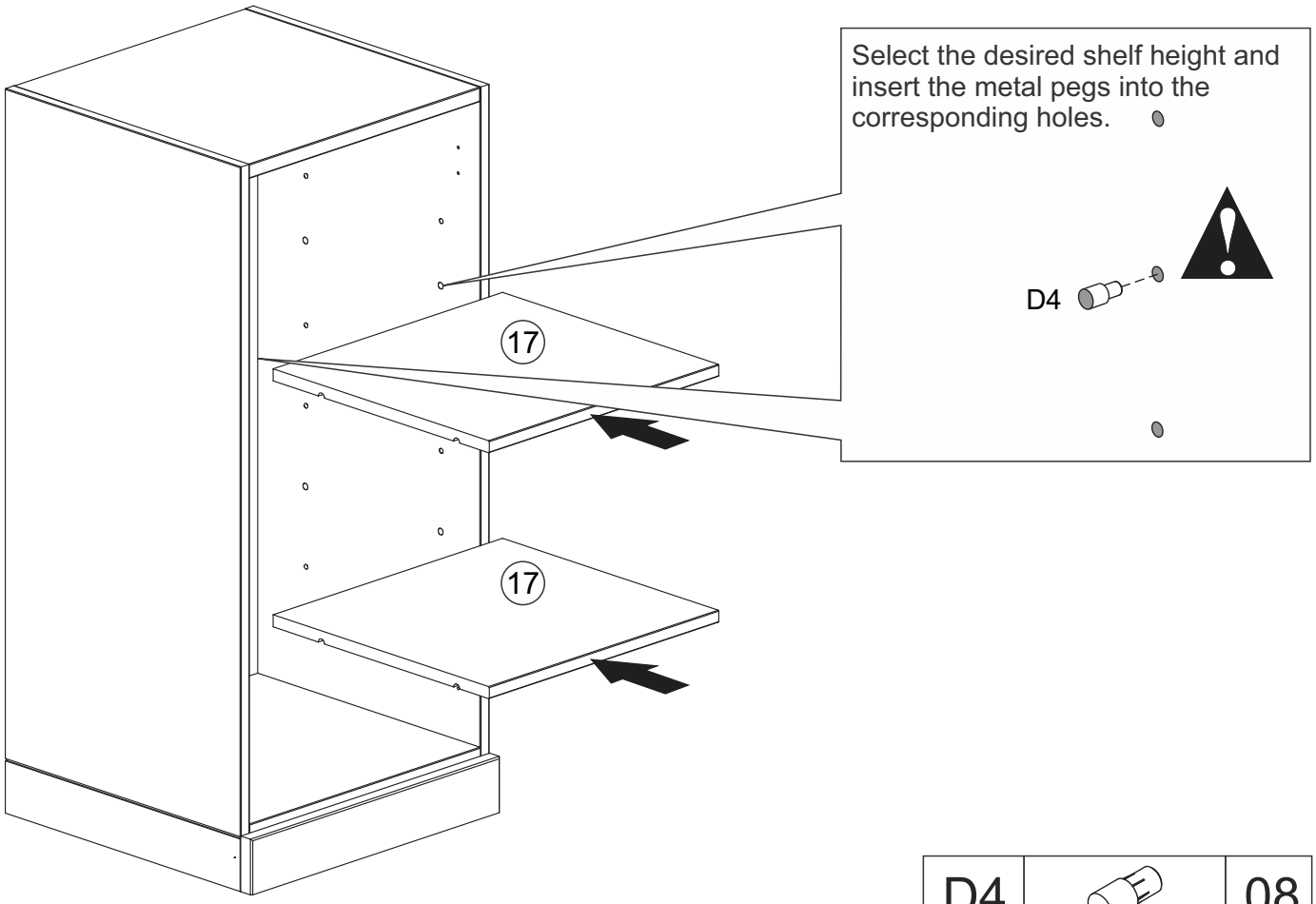

D4		08

09) Stacking and Connecting Multiple Units

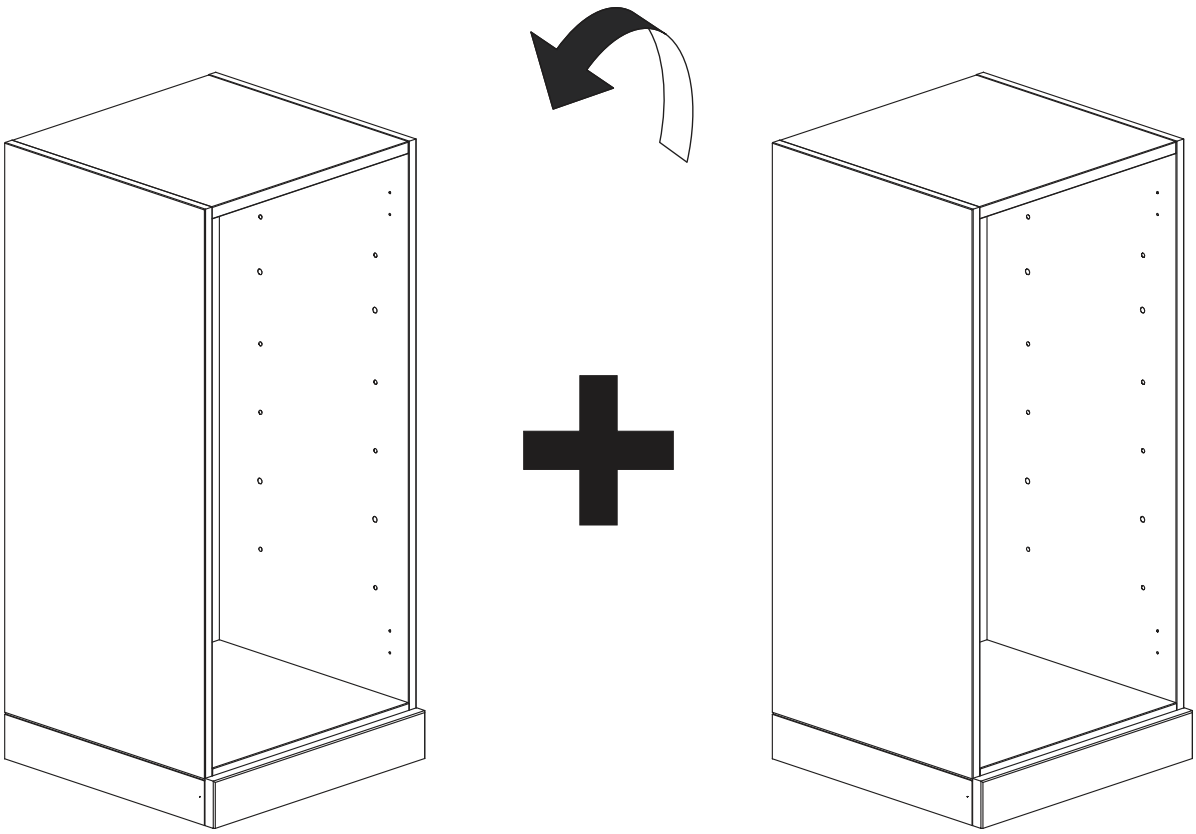

10)

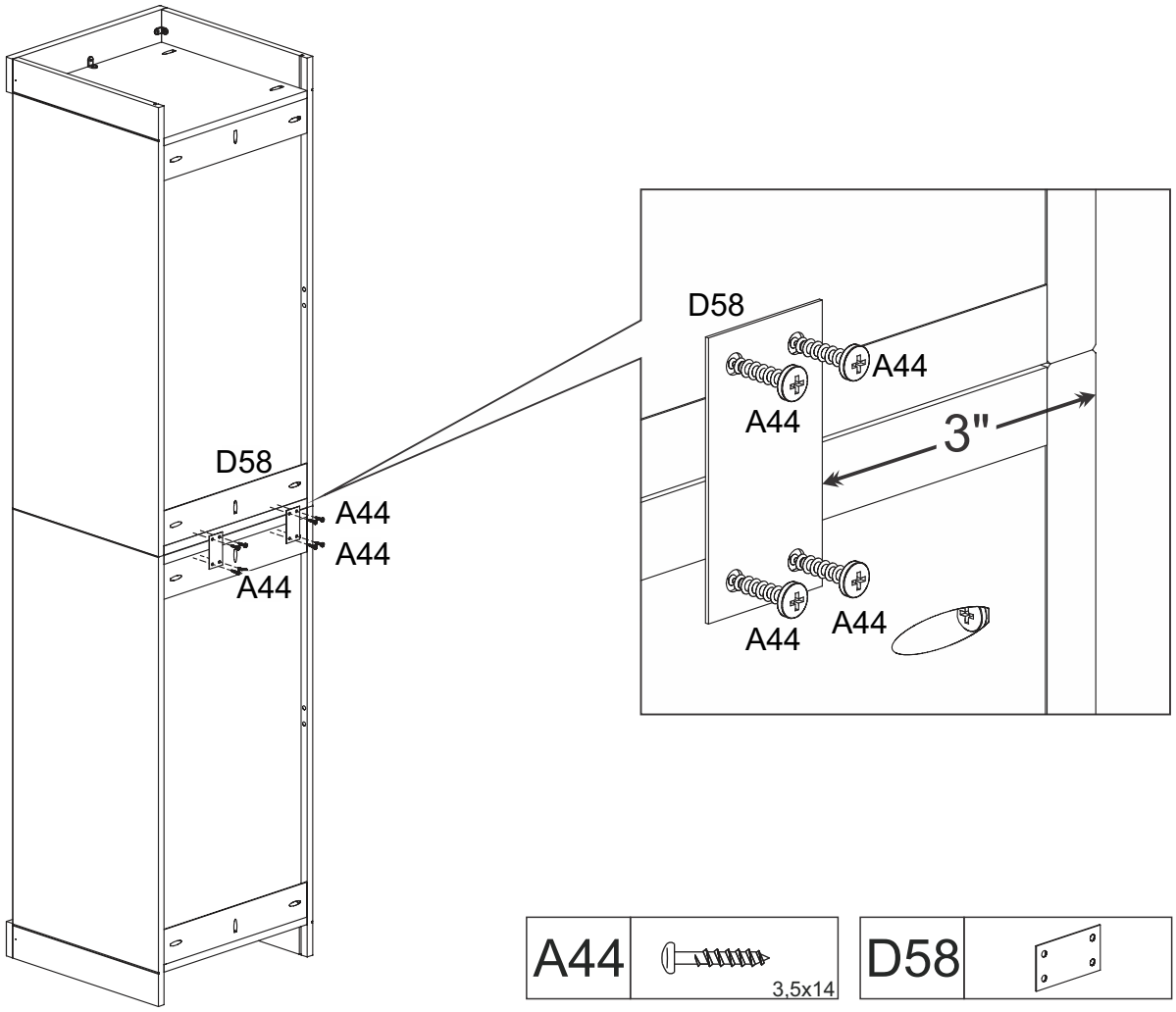

11) Connecting Multiple Units Sideways

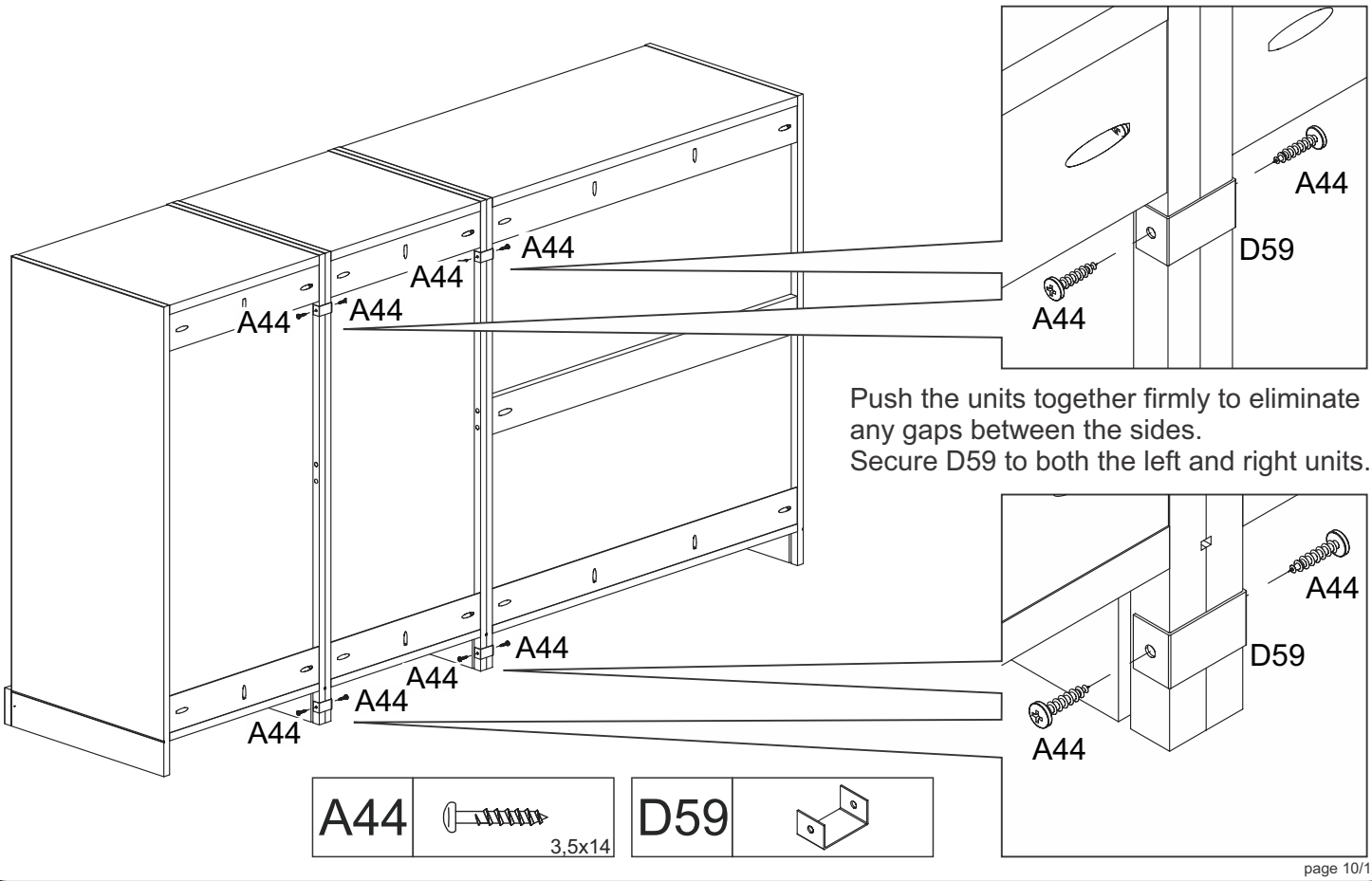

Push the units together firmly to eliminate any gaps between the sides.
Secure D59 to both the left and right units.

12)

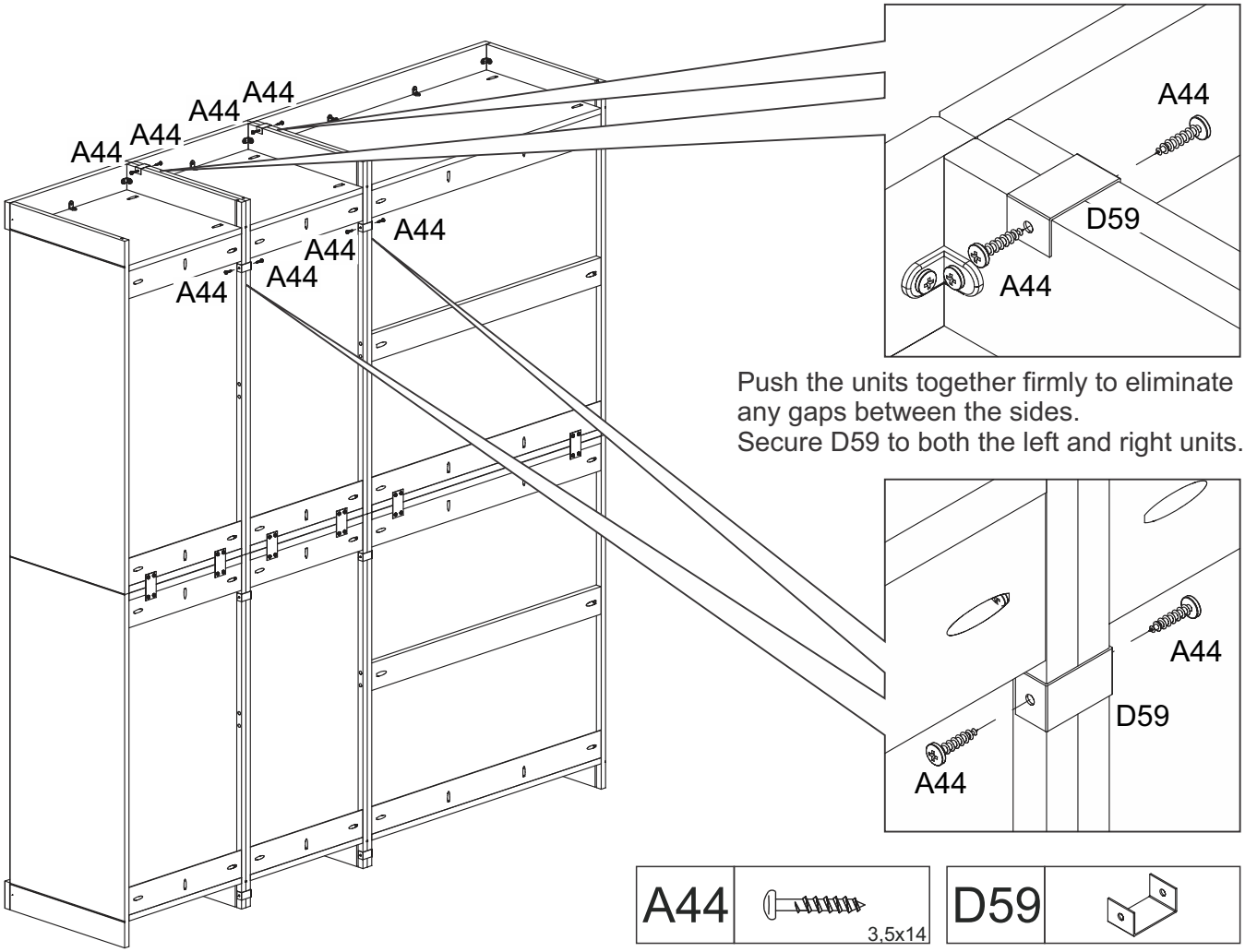

Push the units together firmly to eliminate any gaps between the sides.
Secure D59 to both the left and right units.

A44	3,5x14	D59	

13)

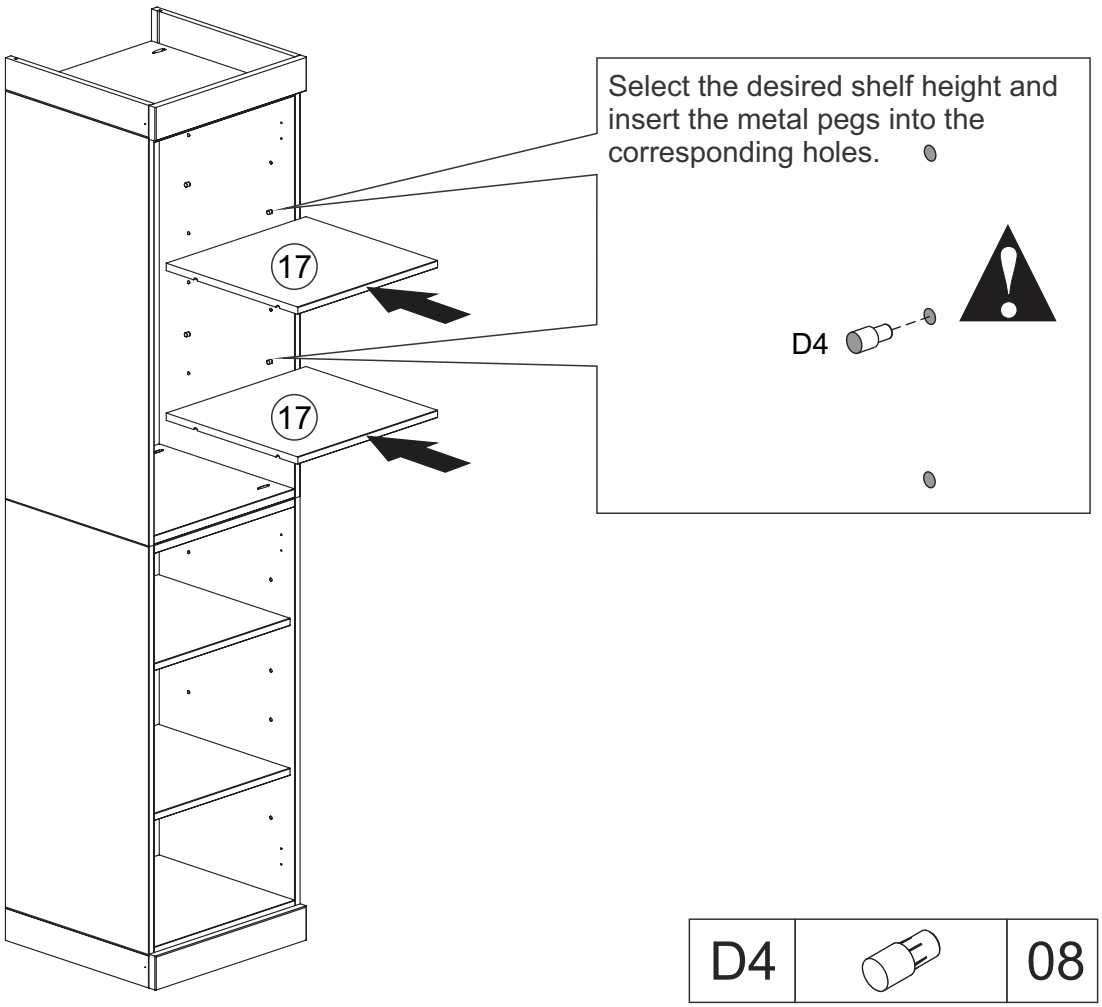

Select the desired shelf height and insert the metal pegs into the corresponding holes.

D4		08

14) Tip-over Restraint Kit Installation

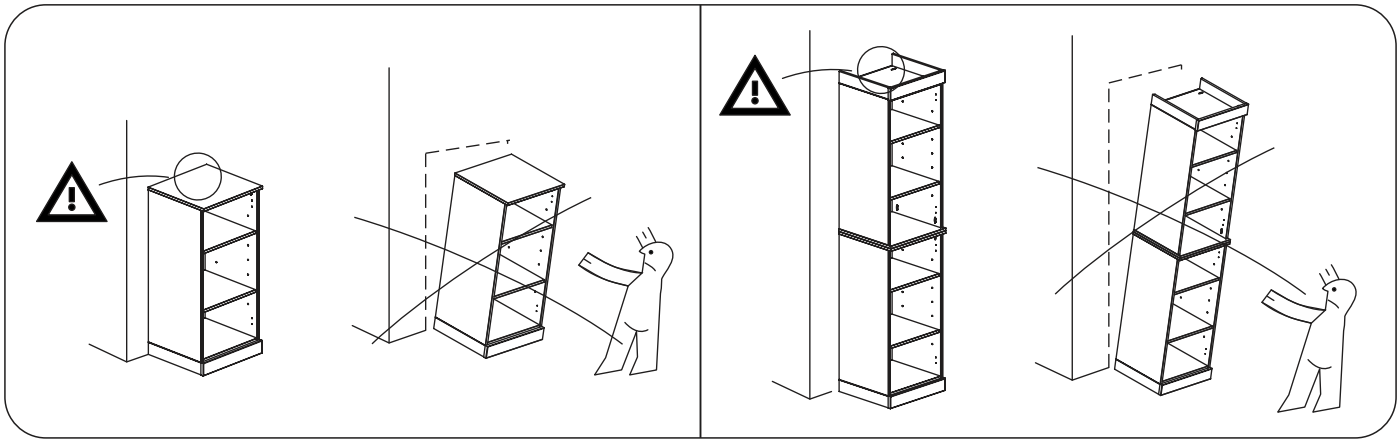

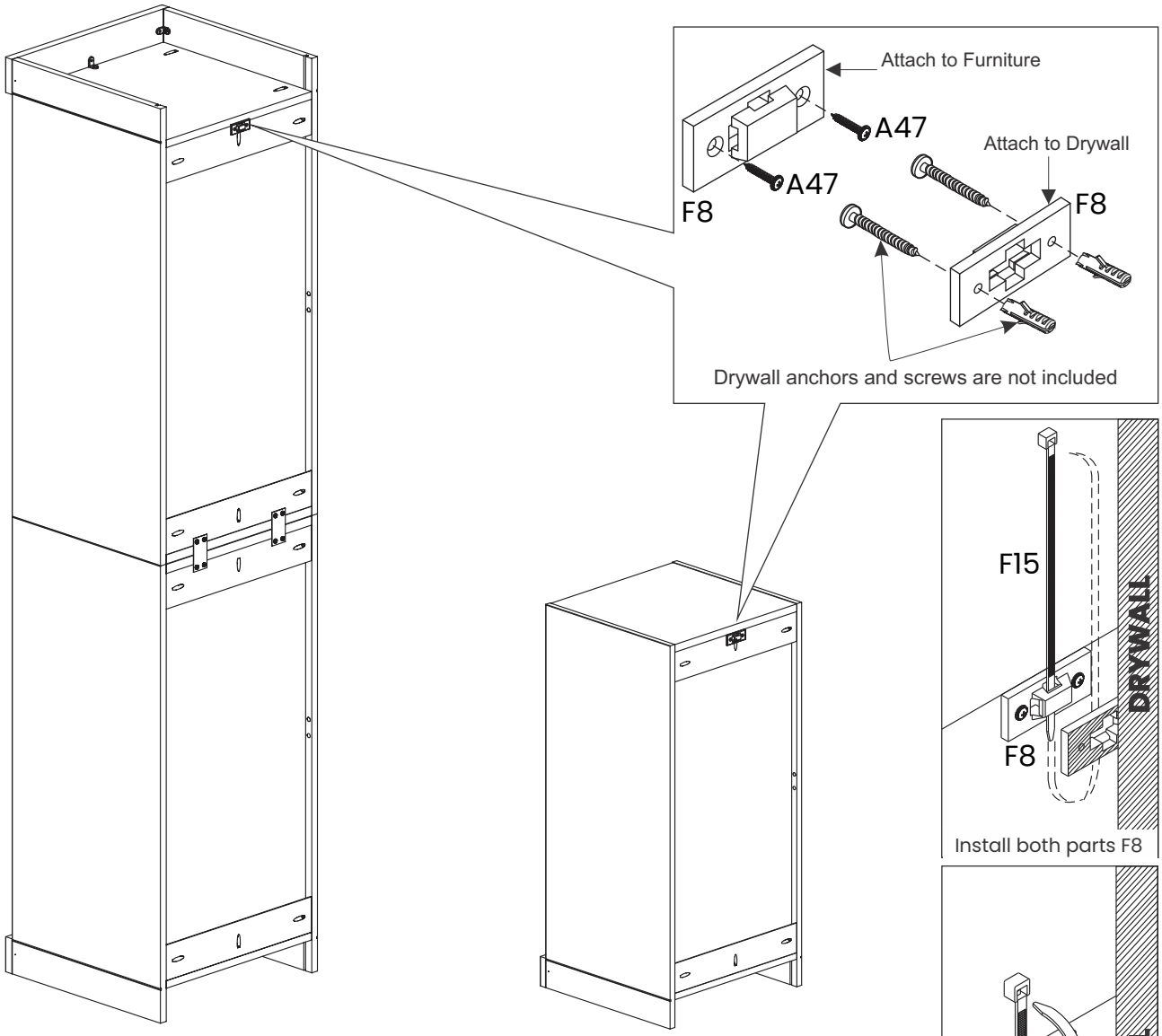

Install both parts F8

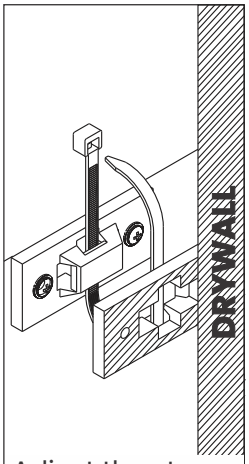

Adjust the straps to remove slack

A47	3,0x20	2
F8		2
F15		1

15) Mounting Wall Cabinets with the Molding Facing Downward

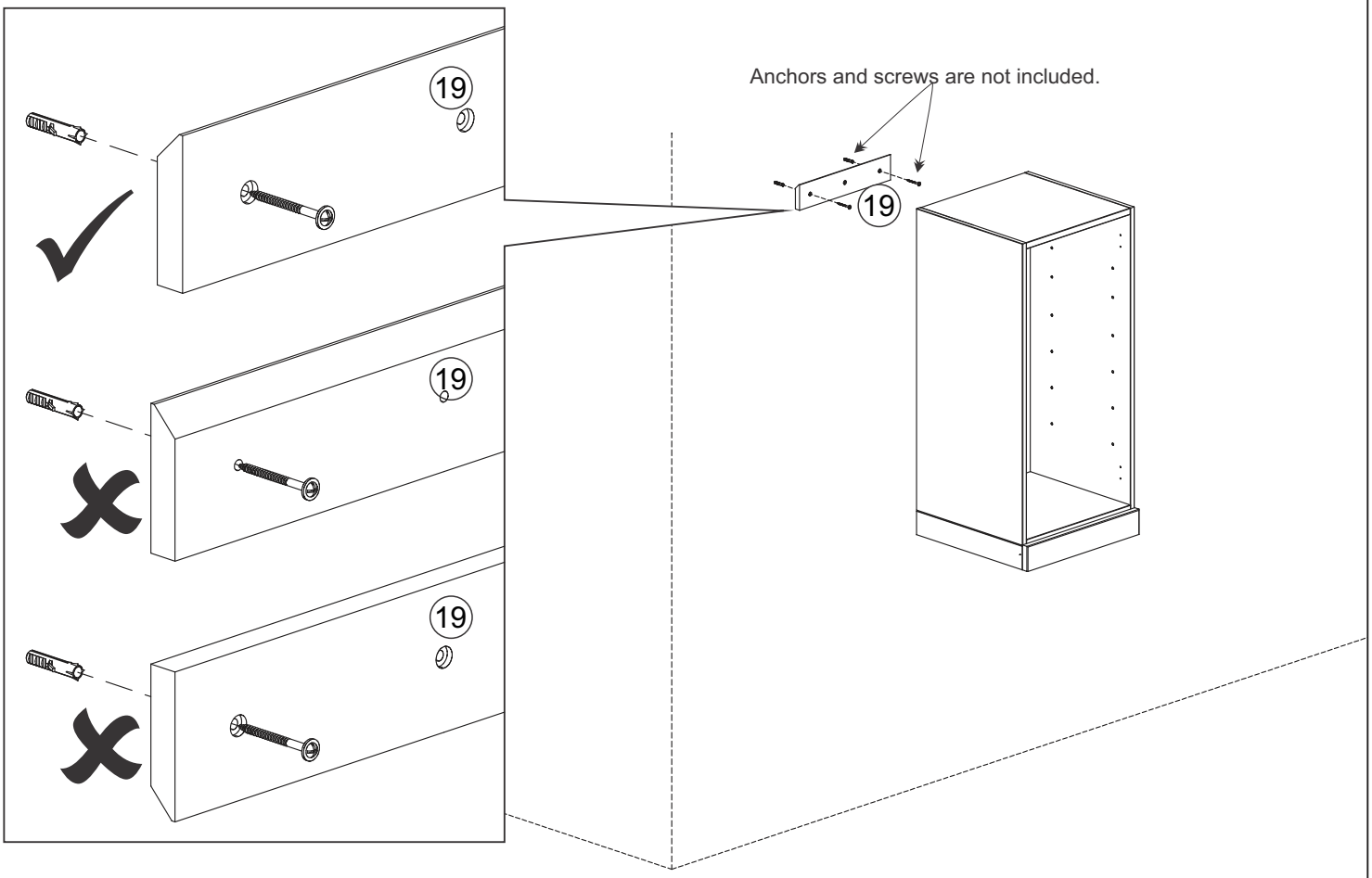

16) Mounting Wall Cabinets with the Molding Facing Upward

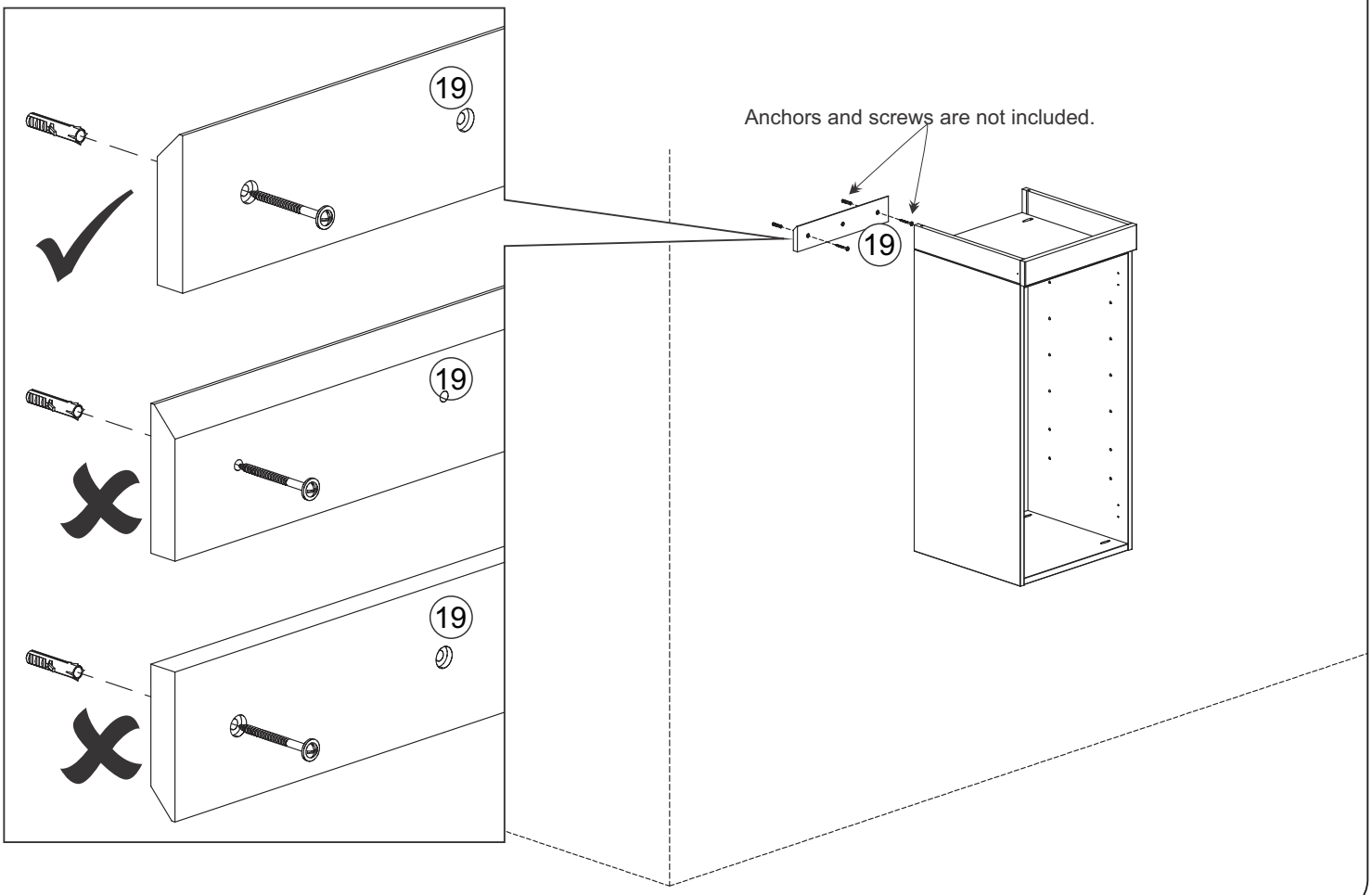

17) This product is modular and can be expanded into multiple configurations with the addition of extra units, doors, or drawer sets (sold separately)

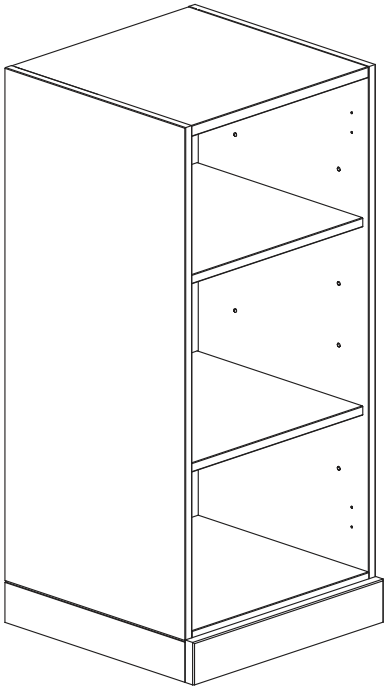

16.5" Unit

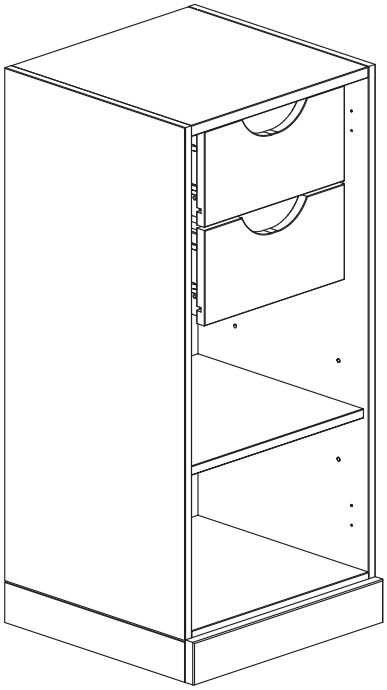

16.5" Unit + Drawers

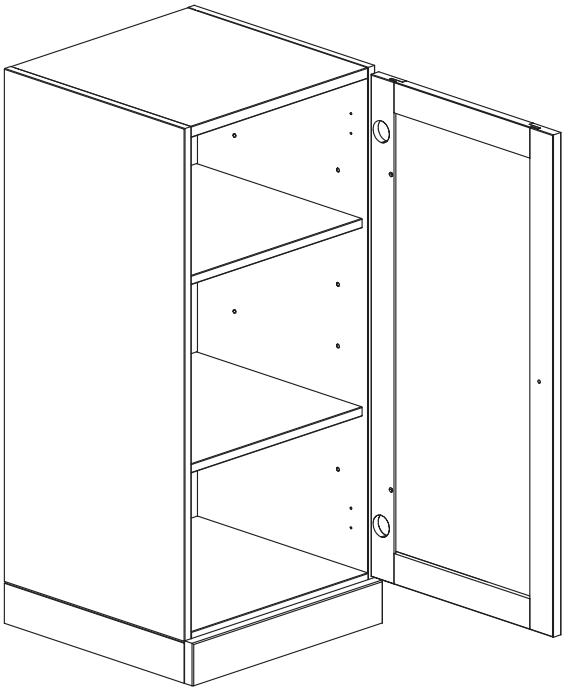

16.5" Unit + Door on the right

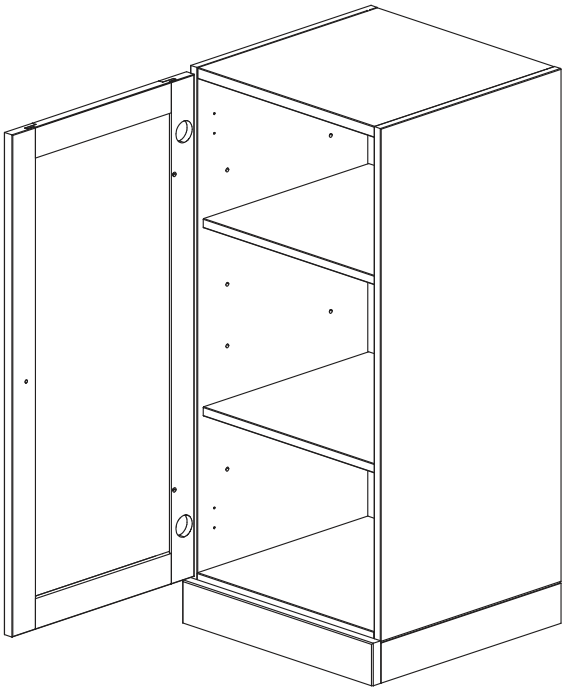

16.5" Unit + Door on the left

18) Examples of additional possible configurations

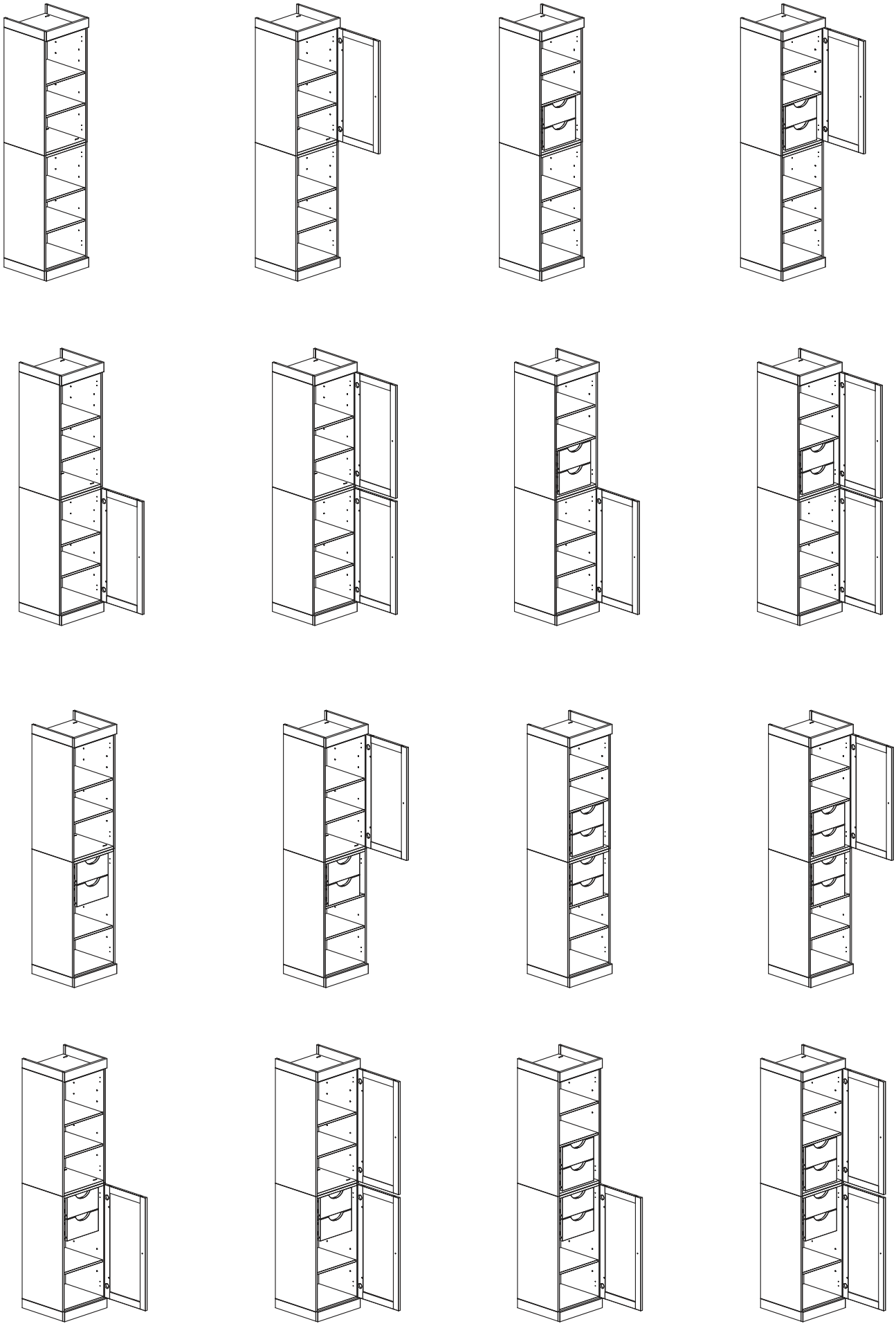
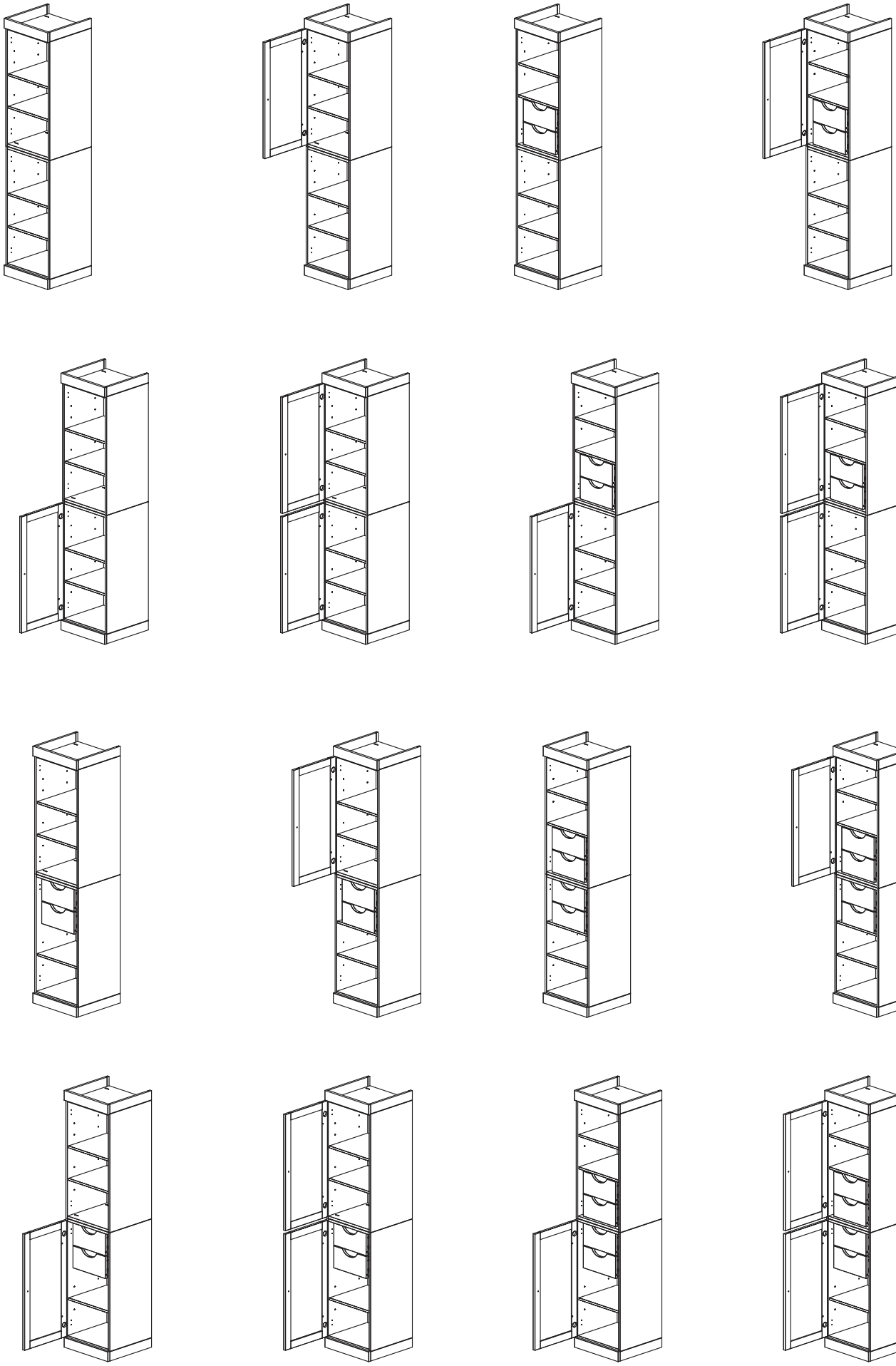
19) Examples of additional possible configurations with the door on the left