Assembly Instructions

Caution : You must read this before you proceed

Care & Maintenance



- Not for commercial use. For residential use only.



- Furniture may scratch floors. We recommend using furniture pads to protect your floors.



- Do not put hot items directly on furniture surface.



- Do not clean furniture with harsh cleansers or polish.



- Do not place furniture under direct sunlight.



- Do not place furniture near heating or cooling vents.



- Do not write on furniture without a padded barrier to protect the surface.



- Do not place furniture outside . For indoor use only.



- Stains may be removed with mild soap solution and damp cloth.



- Children should not climb or jump on the furniture.



- Dust and pick-up spills using a clean, non-colored, lint-free cloth.

Please look in **Carton** for hardware packs and legs.
Sets often ship in multiple boxes and may arrive a day or two apart.

N719P540224

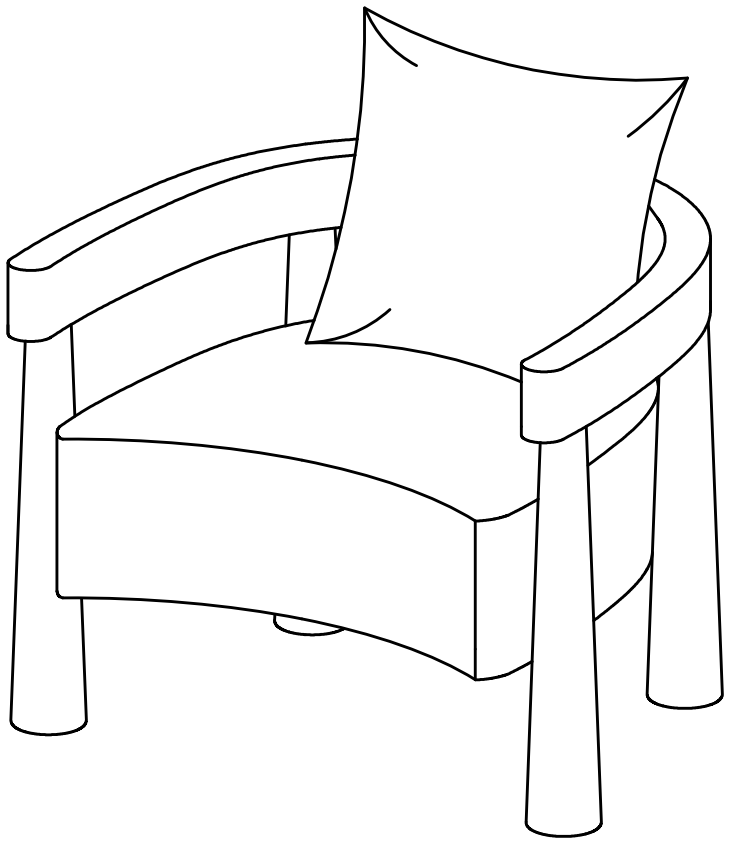

Caution: This Bench is NOT a TOY.
Keep your child / children at bay during the assembly process.
Whenever moving or lifting the Bench and to prevent any possible damage to it, two adults are needed to execute this action.

Parts List

N719P540224

Label	Picture	Description	QTY
A	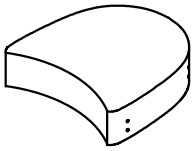	Seat Frame	1
B	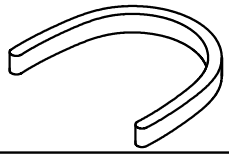	Backrest Frame	1
C		Back Cushion	1
D	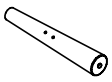	Legs	4

Hardware

Label	Picture	Description	QTY
1		Allen Wrench	1
2	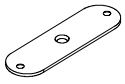	Mounting Pads	4
3		Bolt 5/16" x 45mm	8+1
4		Flat Washer Ø8 5/16"	8+1
5		Bolt 1/4" x 15mm	12+1

Assembly Preparation

Before Beginning Assembly:

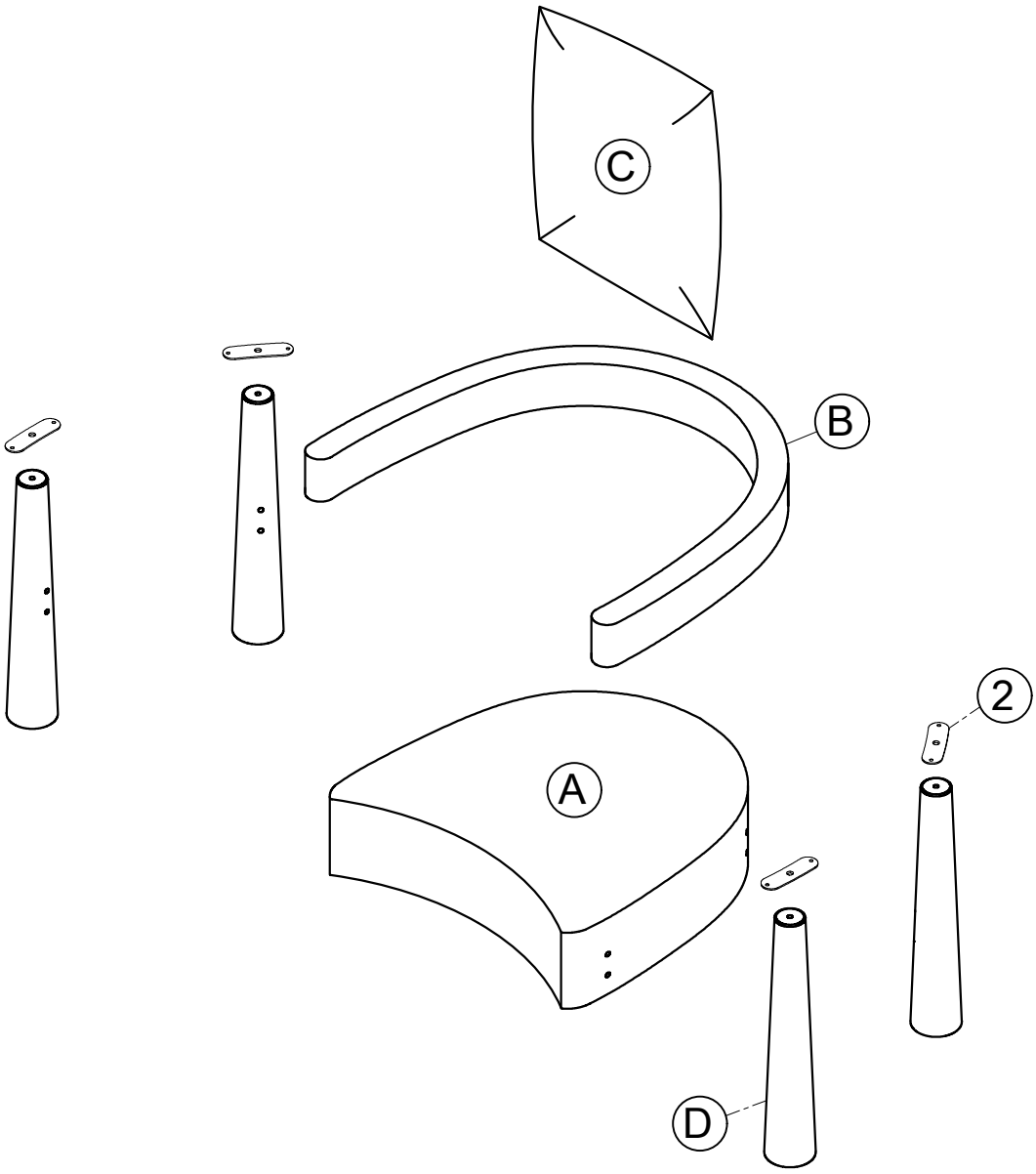

- Read instructions, cover to cover-
- Have 2 adults on hand for assembly-
- Do not assemble on flooring or carpet-
- Assemble on a clean non-marring surface (packing foam)-
- Save all packaging until finished-

Assembly Steps

Overview

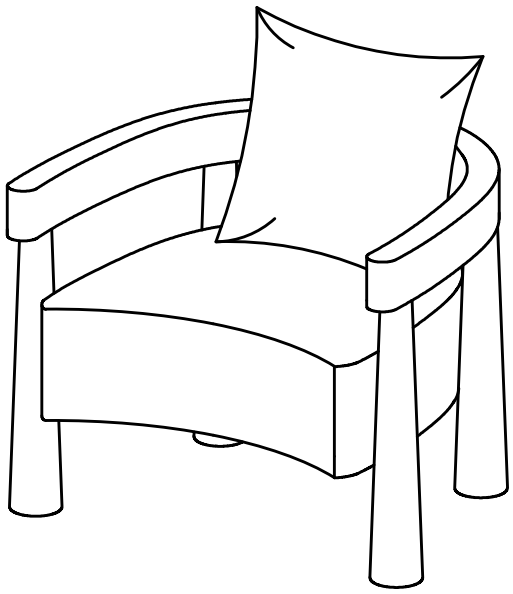

This chair has multiple parts and may require up to some 30 minutes to assemble. To give you an overview of the chair parts, the above picture is to help you put the various parts into perspective. Please read through the instructions below to familiarise yourself with the parts and steps before assembly.

STEP 1: Unpack and place all parts on a clean, non-marring surface.

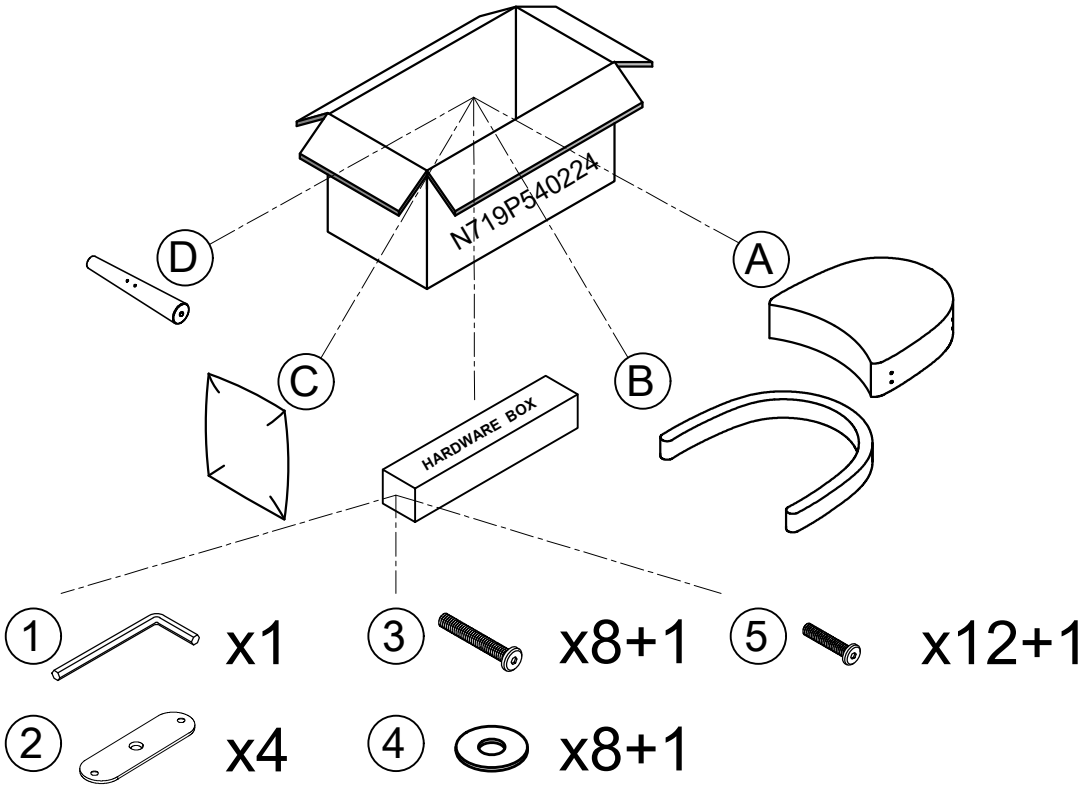

STEP 2 : Attach the **Mounting Pads** (2) to the **Legs (D)** using **Bolts** (5), then tighten securely with an **Allen Wrench** (1).
Next ,attach the **legs (D)** to the **Backrest Frame (B)** using **Bolts** (5)**,** then tighten securely with an **Allen Wrench** (1).

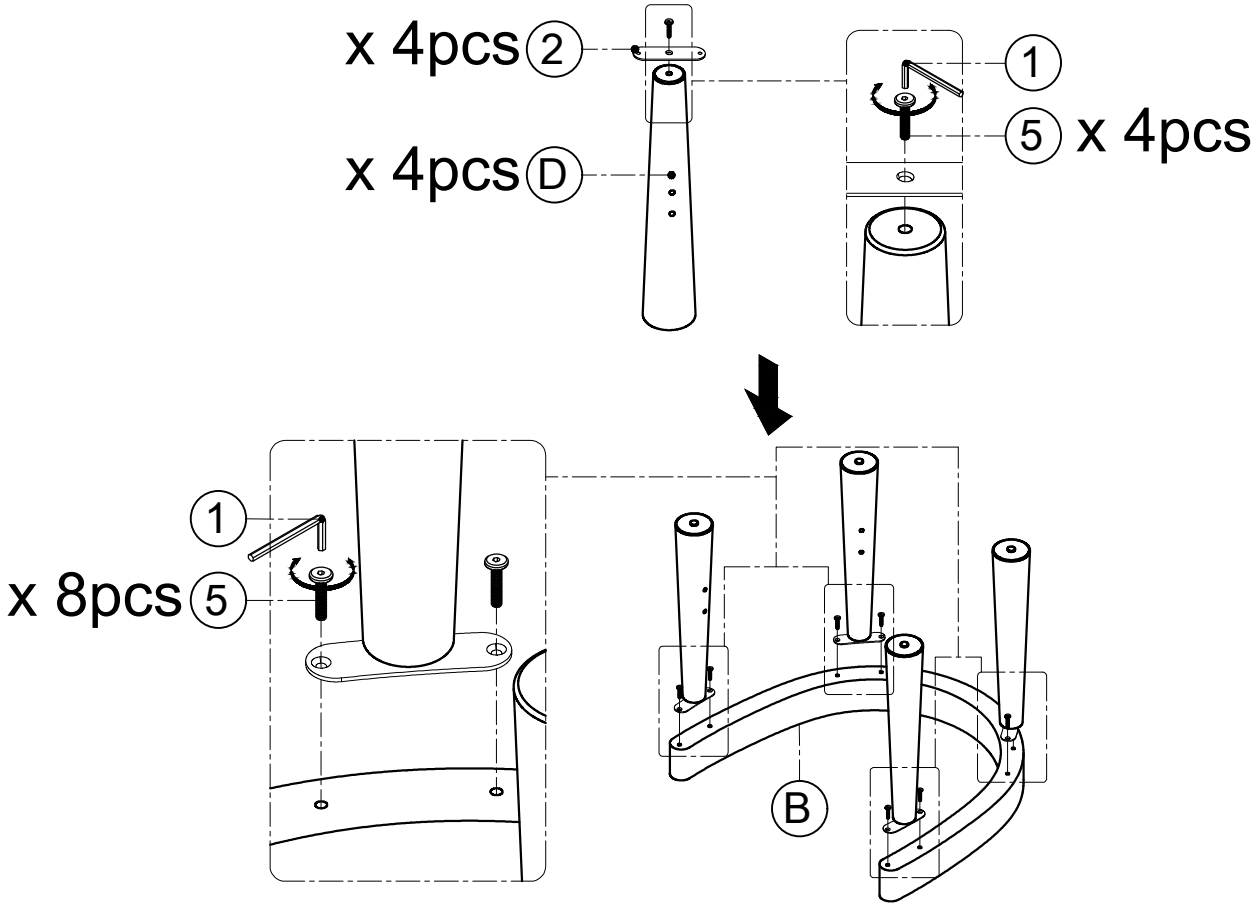

STEP 3 : Attach the **Seat Frame (A)** to the **Legs (D)** using **Bolts** (3), and **Flat Washers** (4)**,** then tighten securely with an **Allen Wrench** (1).

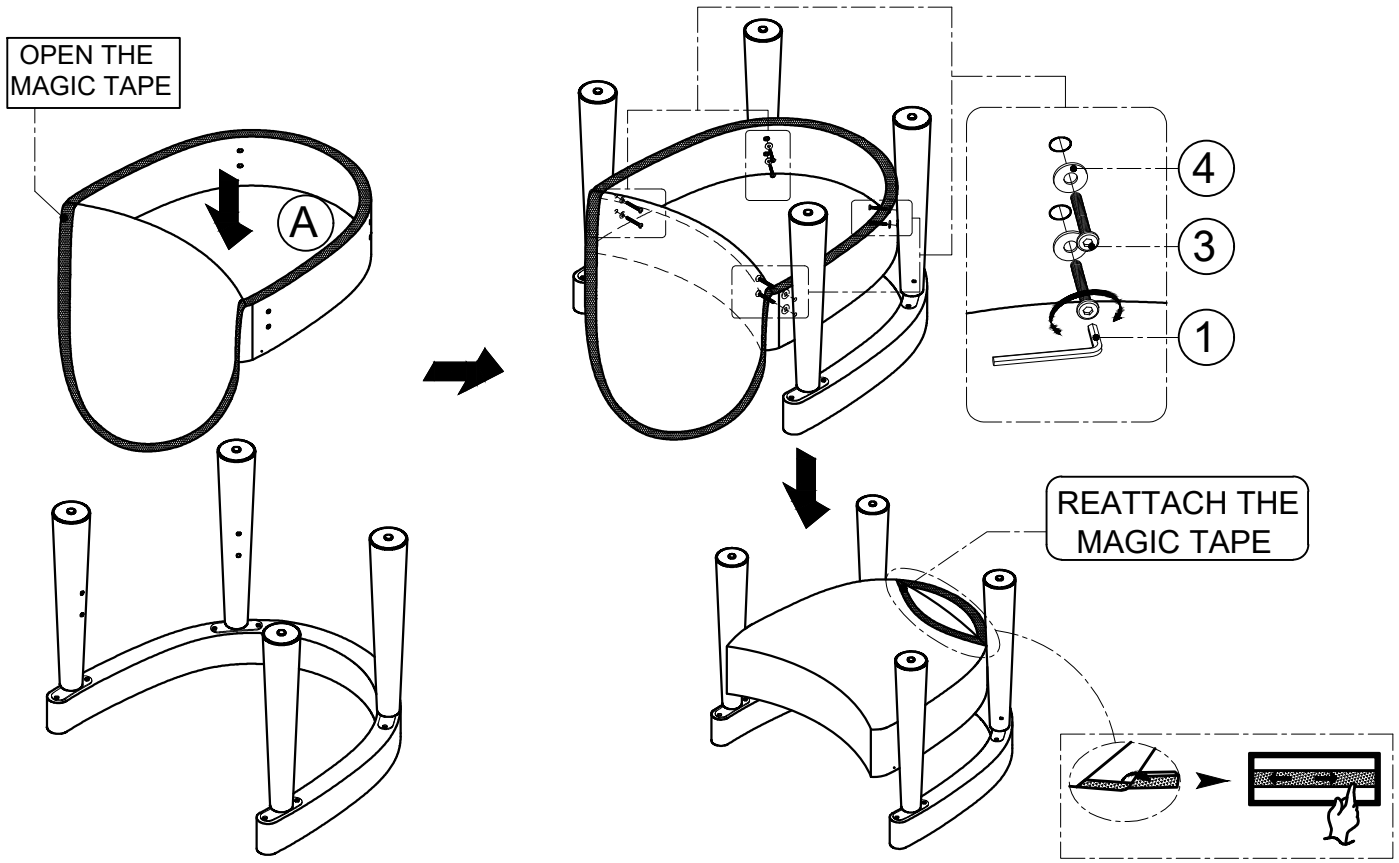

STEP 4 : Place the **Back Cushion (C)** into position

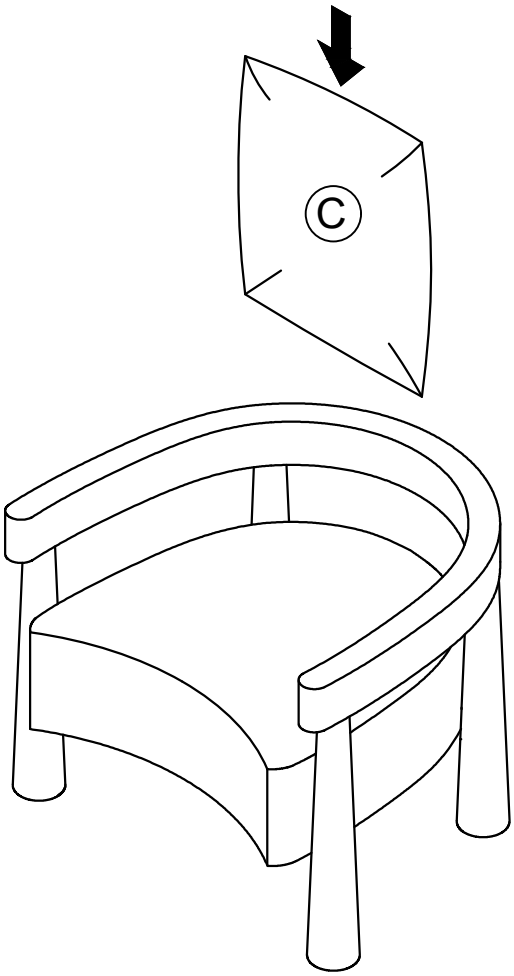

STEP 5: COMPLETE

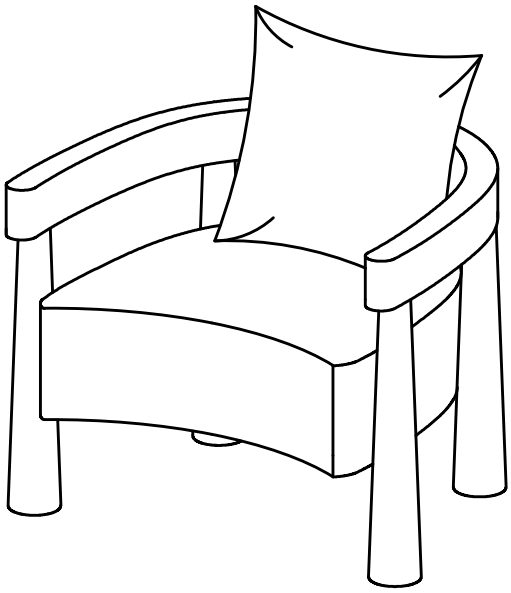

Questions & Answers about Proposition 65

- What is Proposition 65?

Proposition 65 requires businesses to provide warnings to Californians about significant exposures to chemicals that cause cancer, birth defects or other reproductive harm. These chemicals can be in the products that Californians purchase, in their homes or workplaces, or that are released into the environment. By requiring that this information be provided, Proposition 65 enables Californians to make informed decisions about their exposures to these chemicals.

Proposition 65 also prohibits California businesses from knowingly discharging significant amounts of listed chemicals into sources of drinking water.

Proposition 65 requires California to publish a list of chemicals known to cause cancer, birth defects or other reproductive harm. This list, which must be updated at least once a year, has grown to include approximately 900 chemicals since it was first published in 1987.

- What types of chemicals are on the Proposition 65 list?

The list contains a wide range of naturally occurring and synthetic chemicals that include additives or ingredients in pesticides, common household products, food, drugs, dyes, or solvents. Listed chemicals may also be used in manufacturing and construction, or they may be byproducts of chemical processes, such as motor vehicle exhaust.

- What does a warning mean?

If a warning is placed on a product label or posted or distributed at a workplace, a business, or in rental housing, the business issuing the warning is aware or believes that it is exposing individuals to one or more listed chemicals.

By law, a warning must be given for listed chemicals unless the exposure is low enough to pose no significant risk of cancer or is significantly below levels observed to cause birth defects or other reproductive harm.

- Where can I get more information on Proposition 65?

If you have specific questions on the administration or implementation of Proposition 65, you can contact OEHHA's Proposition 65 program at P65.Questions@oehha.ca.gov, or by phone at (916) 445-6900.