ASSEMBLY INSTRUCTION

This set is included 2 boxes if don't receive full 2 boxes please contact our customer service team

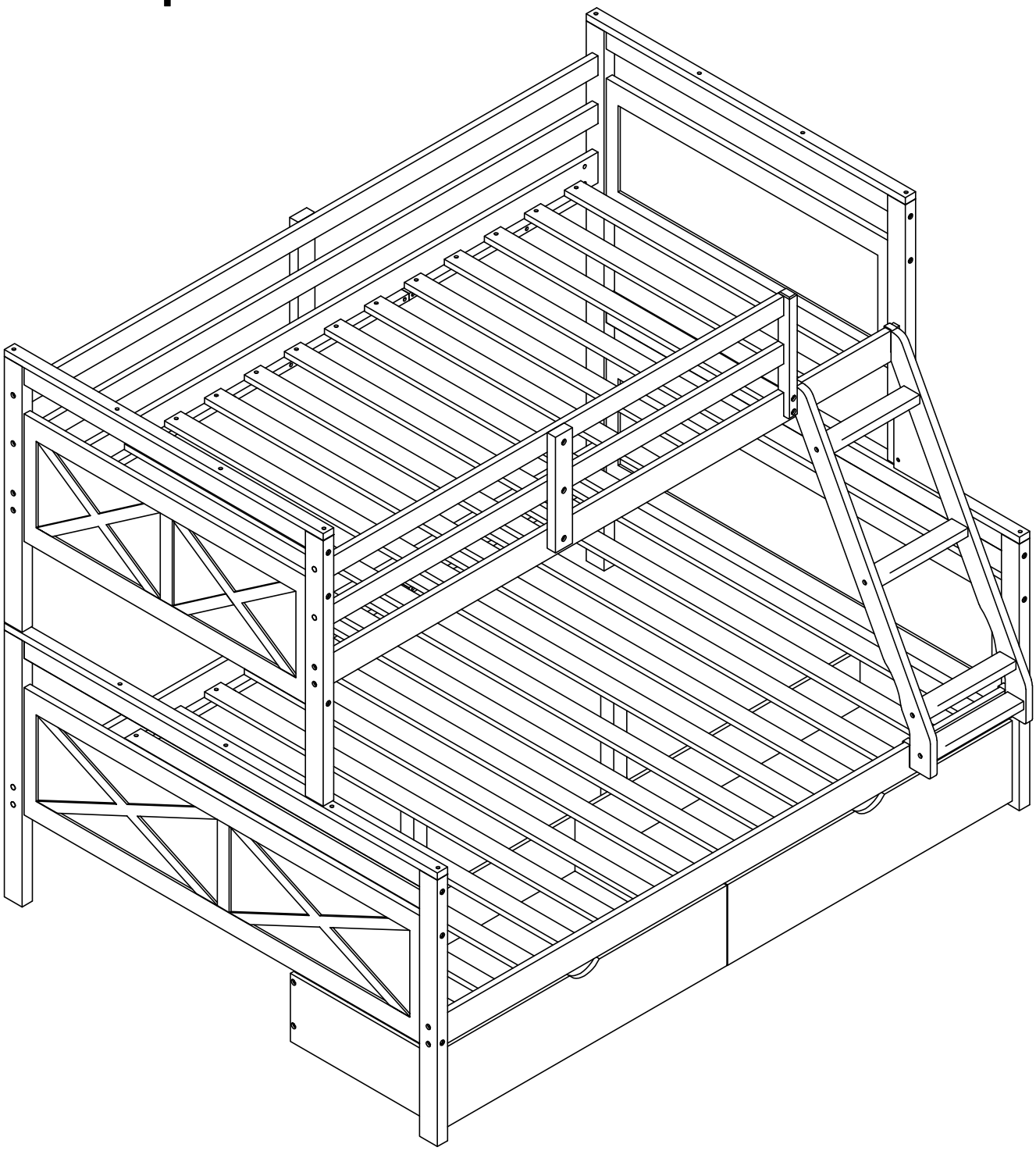

! SAFETY WARNINGS !

1. This bed is designed for use only mattress(es) meeting the following specifications on the upper bunk, and lower bunk:

Bed Type	Length	Width	Thickness
Twin Standard	*74" - 75"*	*38 1/ 2"*	*8" max*
Full Standard	*74" - 75"*	*53 1/2 "*	*8" max*

2. Replacement parts, including additional guardrails, may be obtained from any of our dealers
3. Follow the information on the warnings appearing on the upper bunk bed end structure and on the carton. Do not remove warning label from bed.
4. Always use the recommended size mattresses or mattress supports, or both, to help prevent the likelihood of entrapment or falls.
5. Surface of the mattress must be at least 5" (127 mm) below the upper edge of guardrails.
6. Do not allow children under 6 years of age to use the upper bunk.
7. Periodically check and ensure that the guardrail, ladder, and other components are in their proper position, free from damage, and that all connectors are tight.
8. Do not allow horseplay on or under the bed and prohibit jumping on the bed
9. Always use the ladder for entering and leaving the upper bunk.
10. Do not use substitute parts. Contact the manufacturer or dealer for replacement parts.
11. Use of a night light may provided added safety precaution for a child using the upper bunk.
12. Always use guardrails on both long sides of the upper bunk. If the bunk bed will be placed next to the wall, the guardrail that runs the full length of the bed should be placed against the wall to prevent entrapment between the bed and wall.
13. The use of water or sleep flotation mattresses is prohibited.
14. STRANGULATION HAZARD – Never attach or hang items to any part of the bunk bed that are not designed for use with the bed; for example, but not limited to, hook, belts and jump ropes.
15. Keep these instructions for future reference

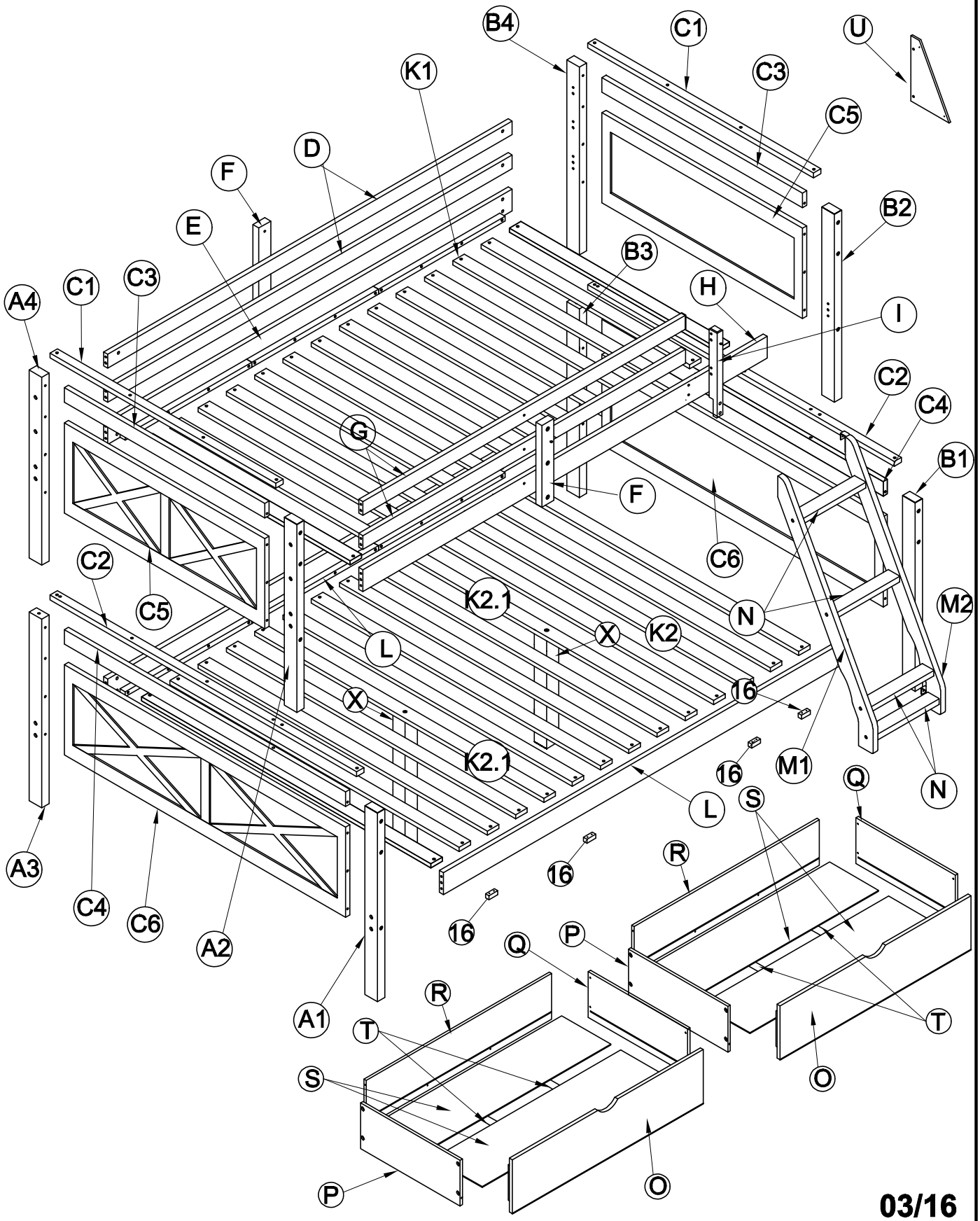
B4
C1
U
K1
C3
C5
D
F
B2
E
B3
C1
C3
A4
H
I
C2
C4
G
B1
F
C6
C2
C5
K2.1
N
M2
X
K2
L
16
X
K2.1
16
M1
Q
N
L
S
A3
R
16
C4
C6
16
A2
Q
P
A1
R
T
T
S
O
P
O

Part List & Hardware List(Box 1)

A1 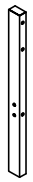 Front Leg (Left) - 1pcs	A2 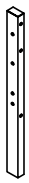 Front Leg (Left) - 1pcs	A3 Back Leg (Left) - 1pcs
A4 Back Leg (Left) - 1pcs	B1 Front Leg (Right) - 1pcs	B2 Front Leg (Right) - 1pcs
B3 Back Leg (Right) - 1pcs	B4 Back Leg (Right) - 1pcs	C3 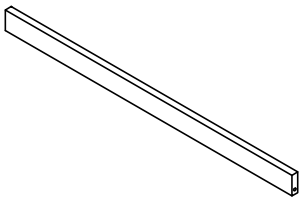 Side rail - 2pcs
C5 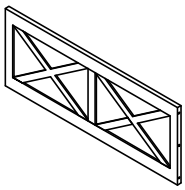 Side Frame - 2pcs	C6 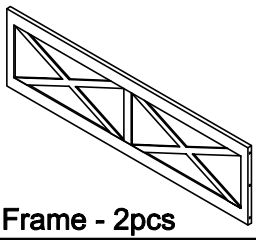 Side Frame - 2pcs	K2 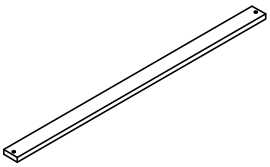 Slat - 12psc
M1 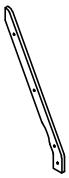 Side Ladder - 1psc	M2 Side Ladder - 1psc	K2.1 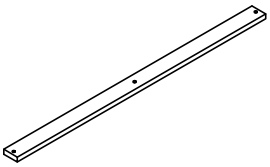 Slat - 2psc
X Slat Support- 2psc		

Part List(Box 2)

C1 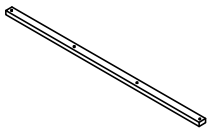 Side rail - 2pcs	C2 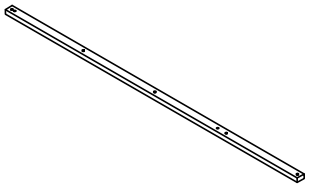 Side rail - 2pcs	C4 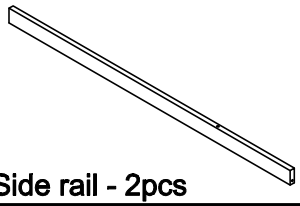 Side rail - 2pcs
D 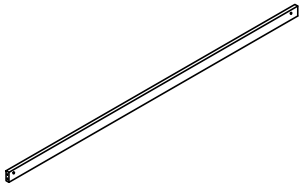 Back Rail - 2pcs	E Back Rail - 1pcs	F 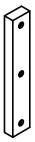 Rail - 2pcs
G 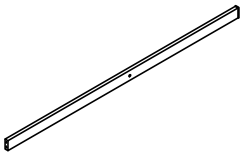 Front Rail - 2pcs	H 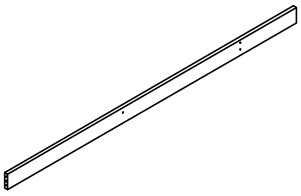 Front Rail - 1pcs	I Rail - 1pcs
K1 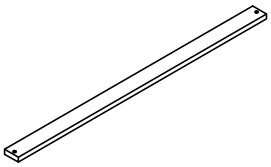 Slat - 14psc	L 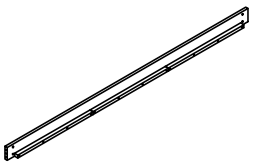 Side rail - 2psc	N 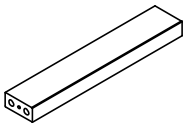 Step Ladder - 4psc
O 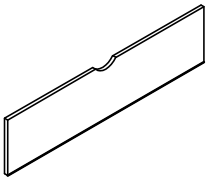 Front Drawer-2psc	P 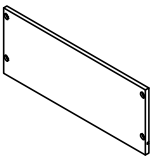 Side Drawer(Left)-2psc	Q 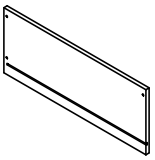 Side Drawer(Right)-2psc
R 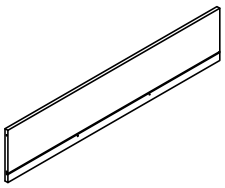 Back Drawer-2psc	S 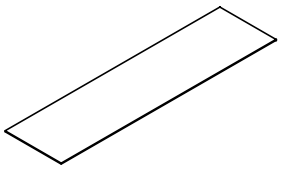 Bottom Drawer-4psc	T 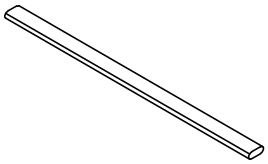 Bottom Rail-4psc
U 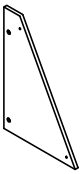 Panel-1pc		

Hardware List

1 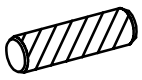 Ø10 x 40 mm Wood dowel 40pcs	2 Ø1/4" x 100 mm Hex-Head bolts 24pcs	3 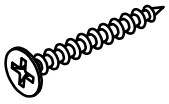 M4 x 30 mm Wood Screws 102pcs
4 Ø1/4" x 80 mm Hex-Head bolts 24pcs	5 Ø1/4" x 13 mm Horizontal-Hole bolts 24pcs	6 Ø1/4" x 30 mm Hex-Head bolts 6pcs
7 Ø1/4" x 15 mm Canopy head though - 2pcs	8 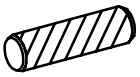 Ø12 x 110 mm Wood dowel 4pcs	9 Ø1/4" x 50 mm Hex-Head bolts 8pcs
10 Bracket 4 pcs	11 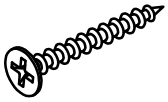 M4 x 15 mm Wood Screws 12pcs	12 Allen Key 1pc
13 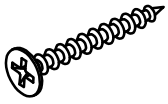 M3.5x 12 mm Wood Screws 24pcs	14 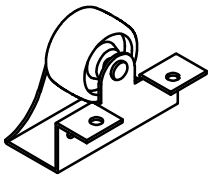 Wheels 8pcs	15 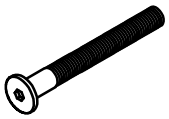 Ø1/4" x 35 mm Hex-Head bolts 4pcs
16 Bottom Rail-4psc	17 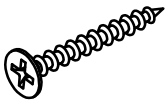 M4 x 20 mm Wood Screws 4pcs	

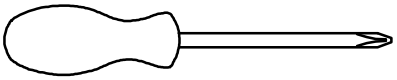

Assembly Tools Required (Not Included)

06/16

STEP 1

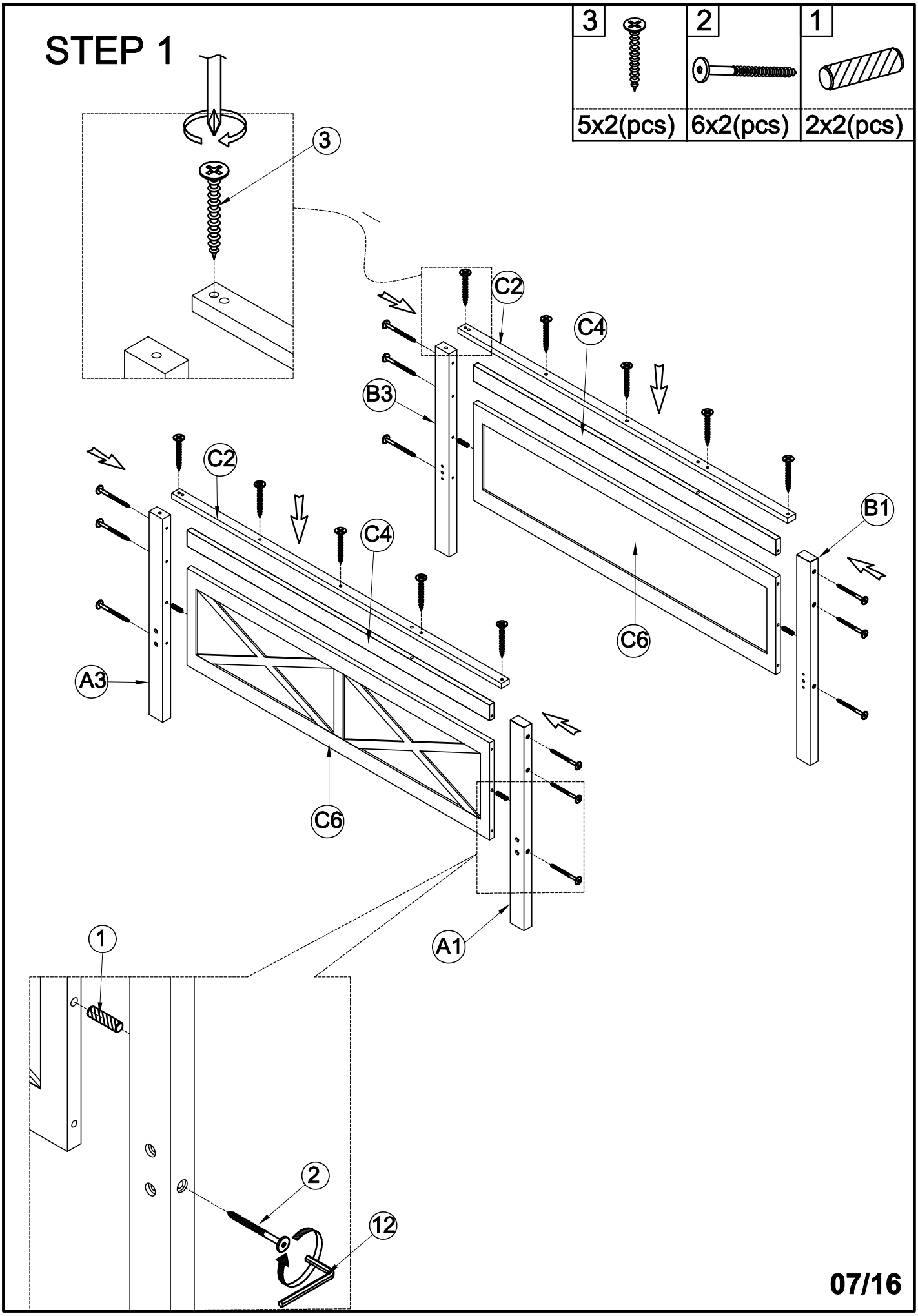

07/16

STEP 2

5	4	1
	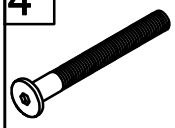	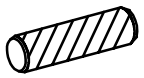
8(pcs)	8(pcs)	4(pcs)

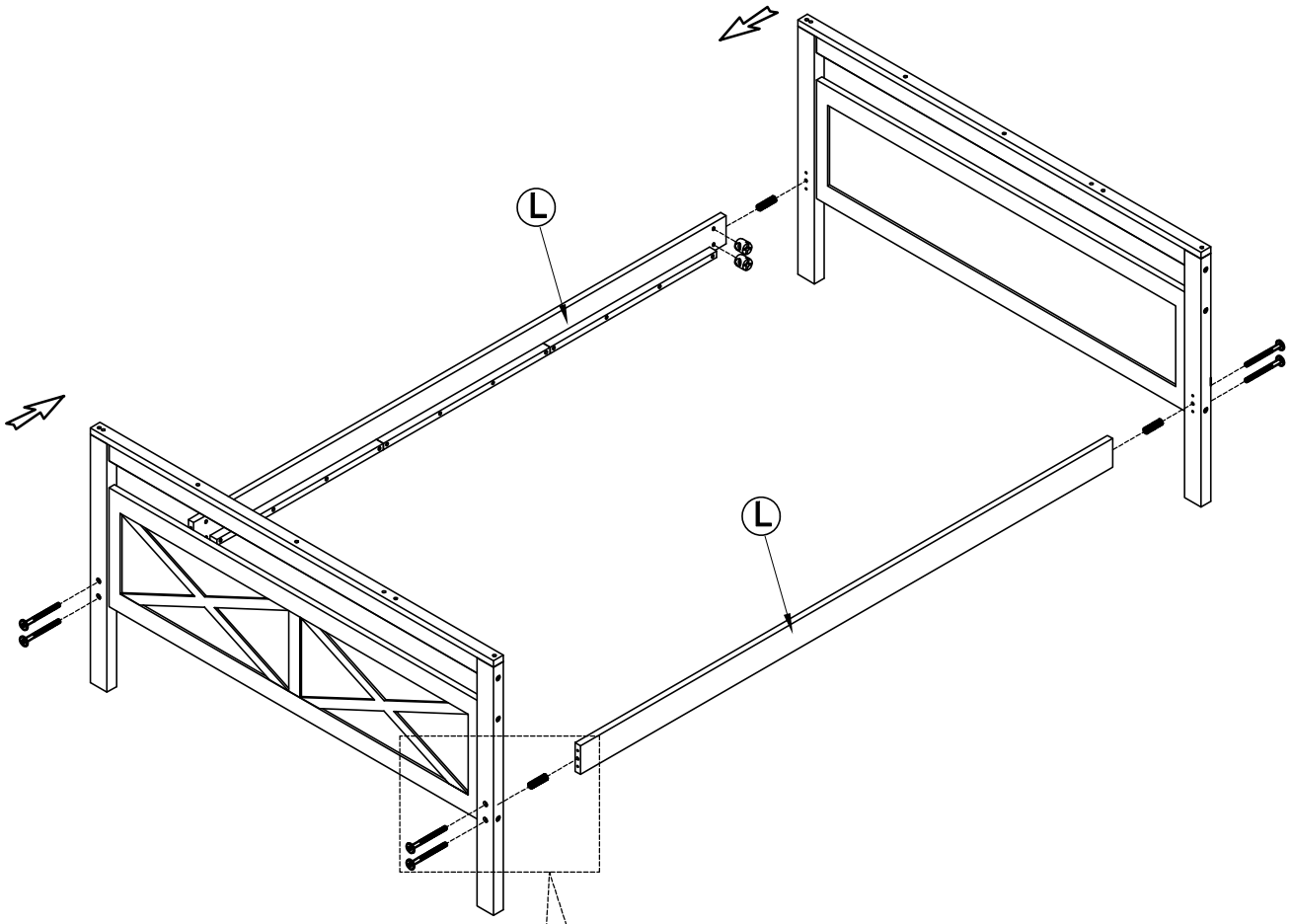

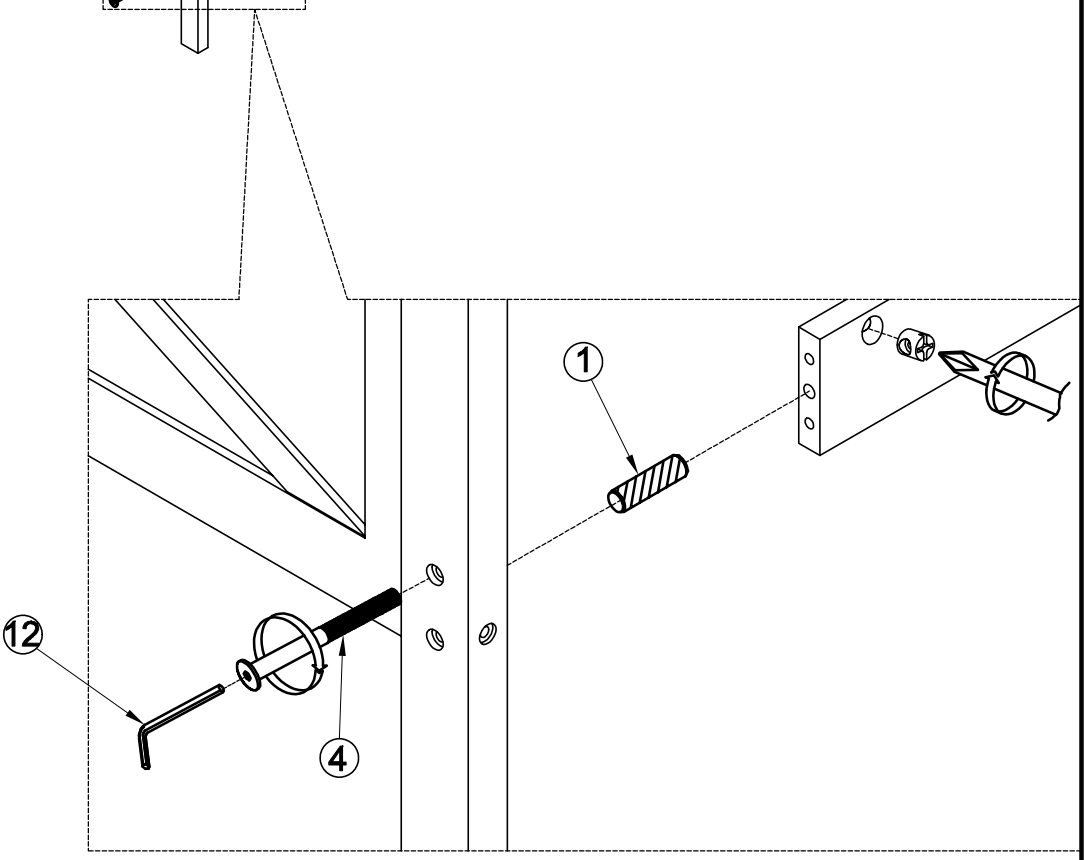

STEP 3

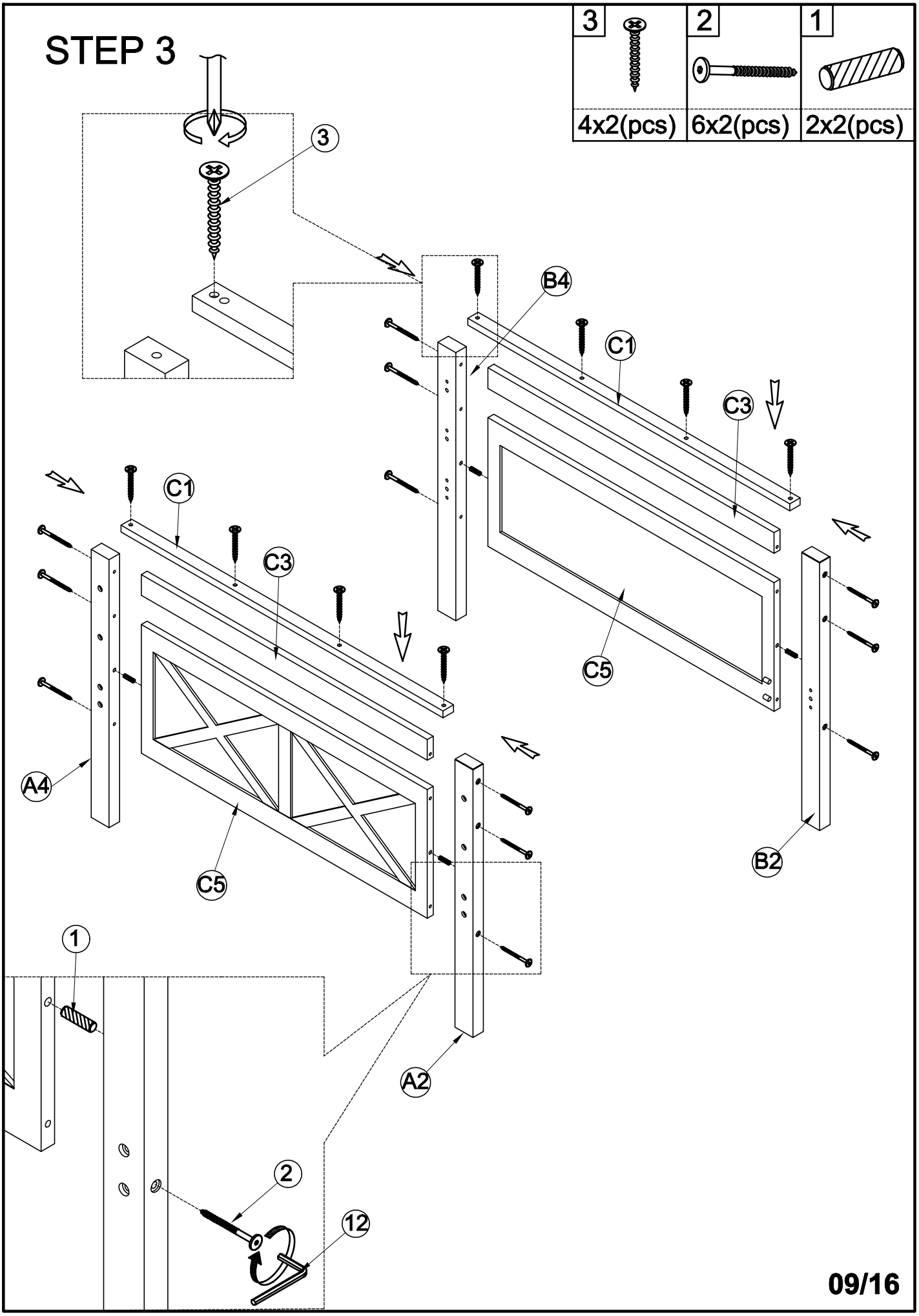

STEP 4-1

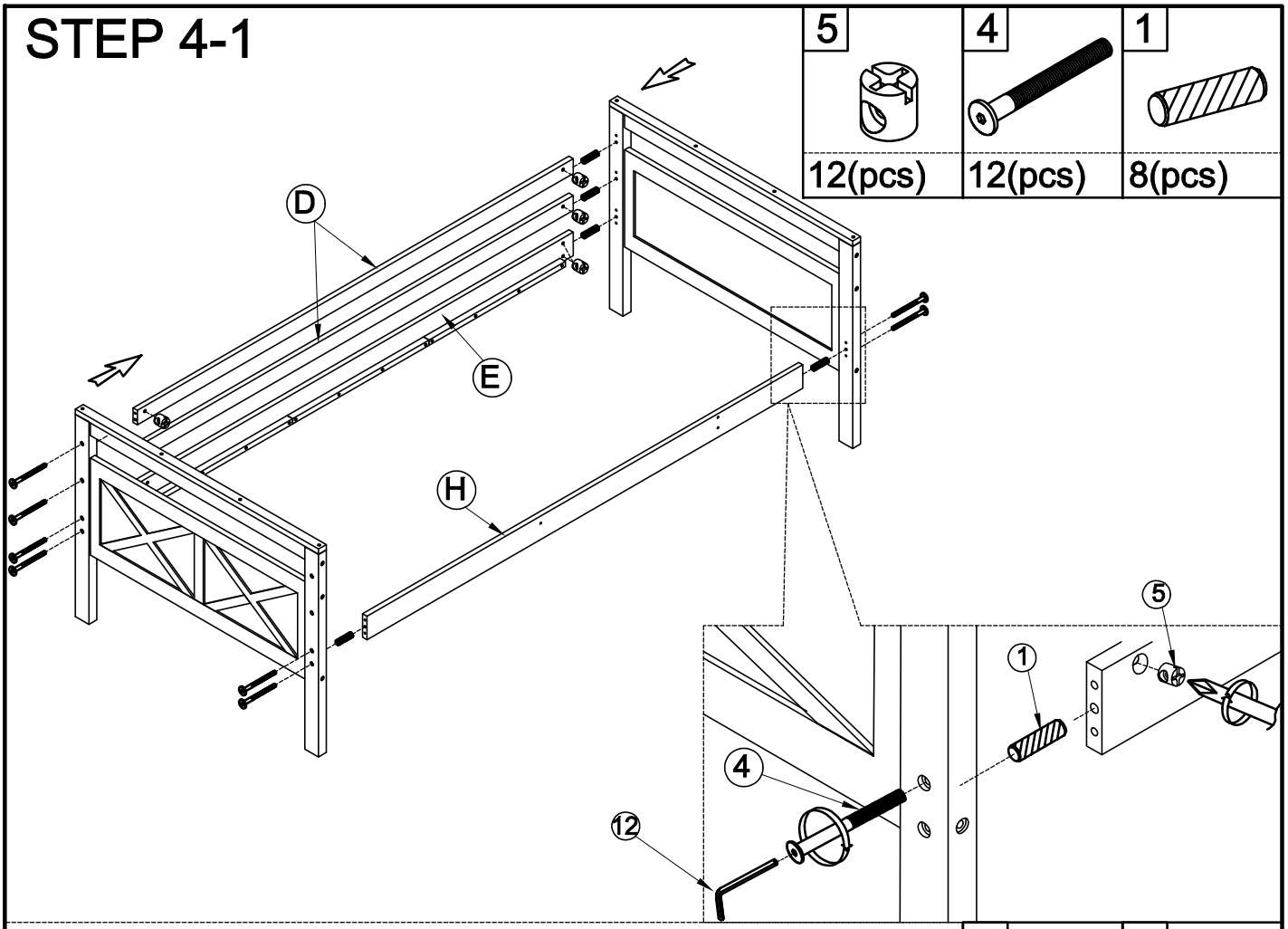

STEP 4-2

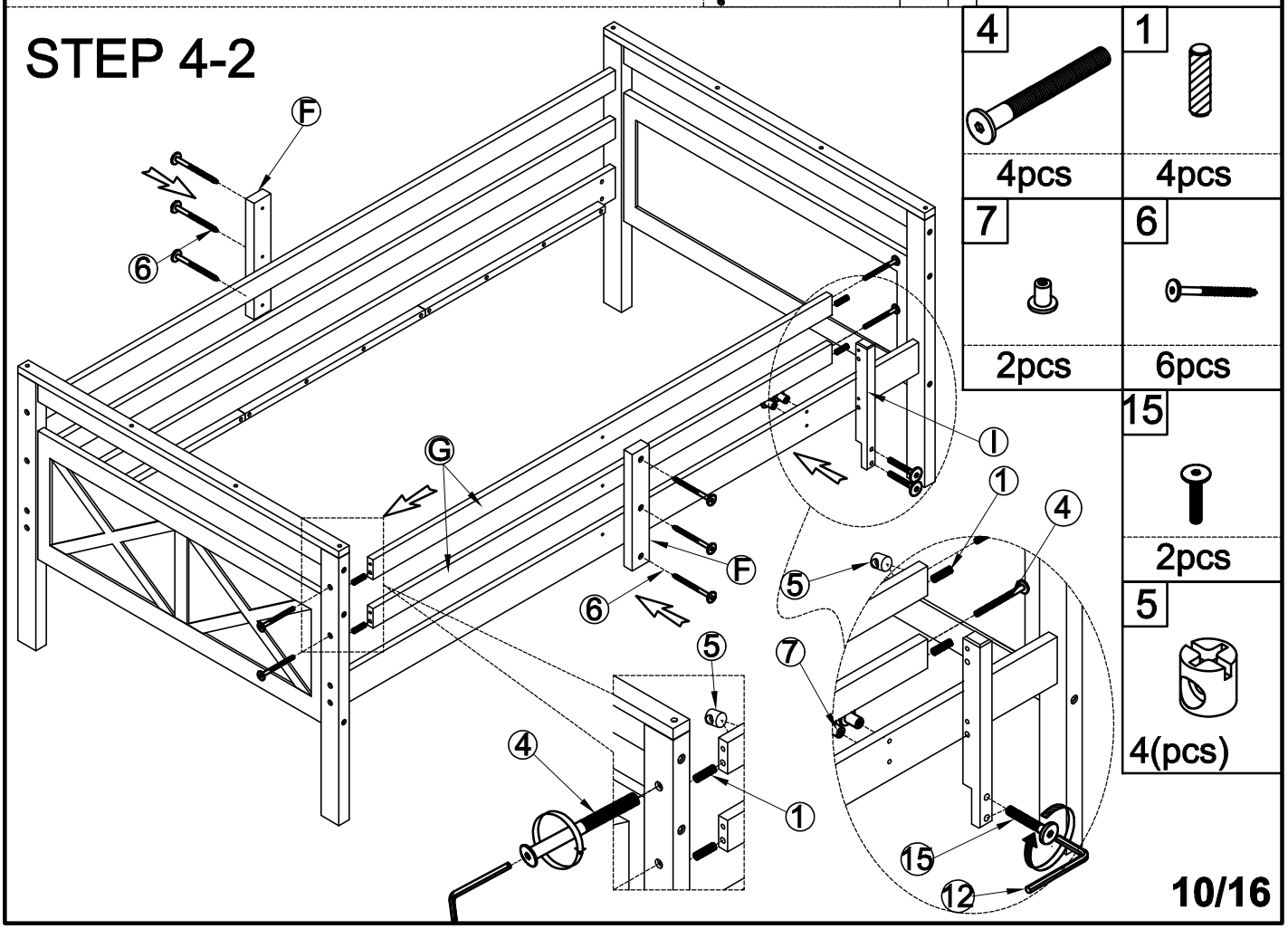

STEP 5

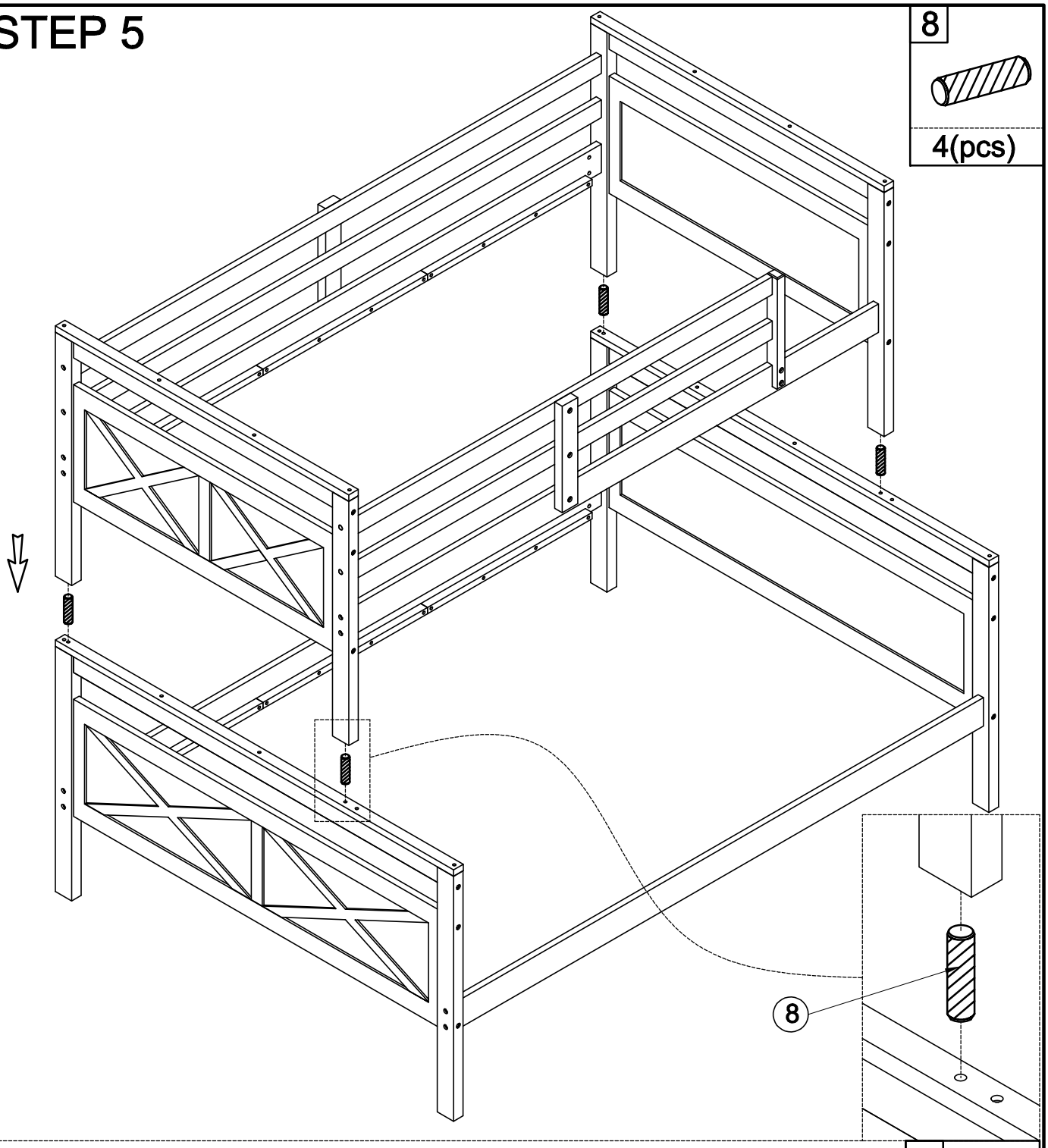

STEP 6

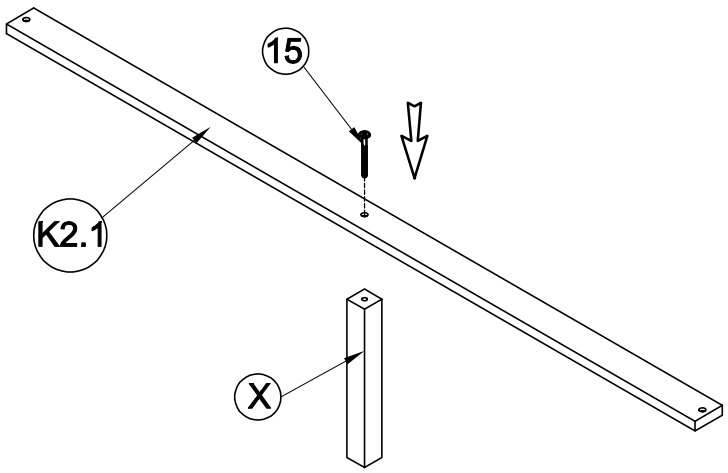

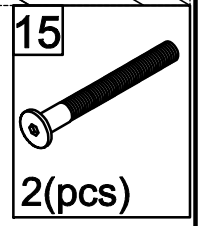

1

STEP 7

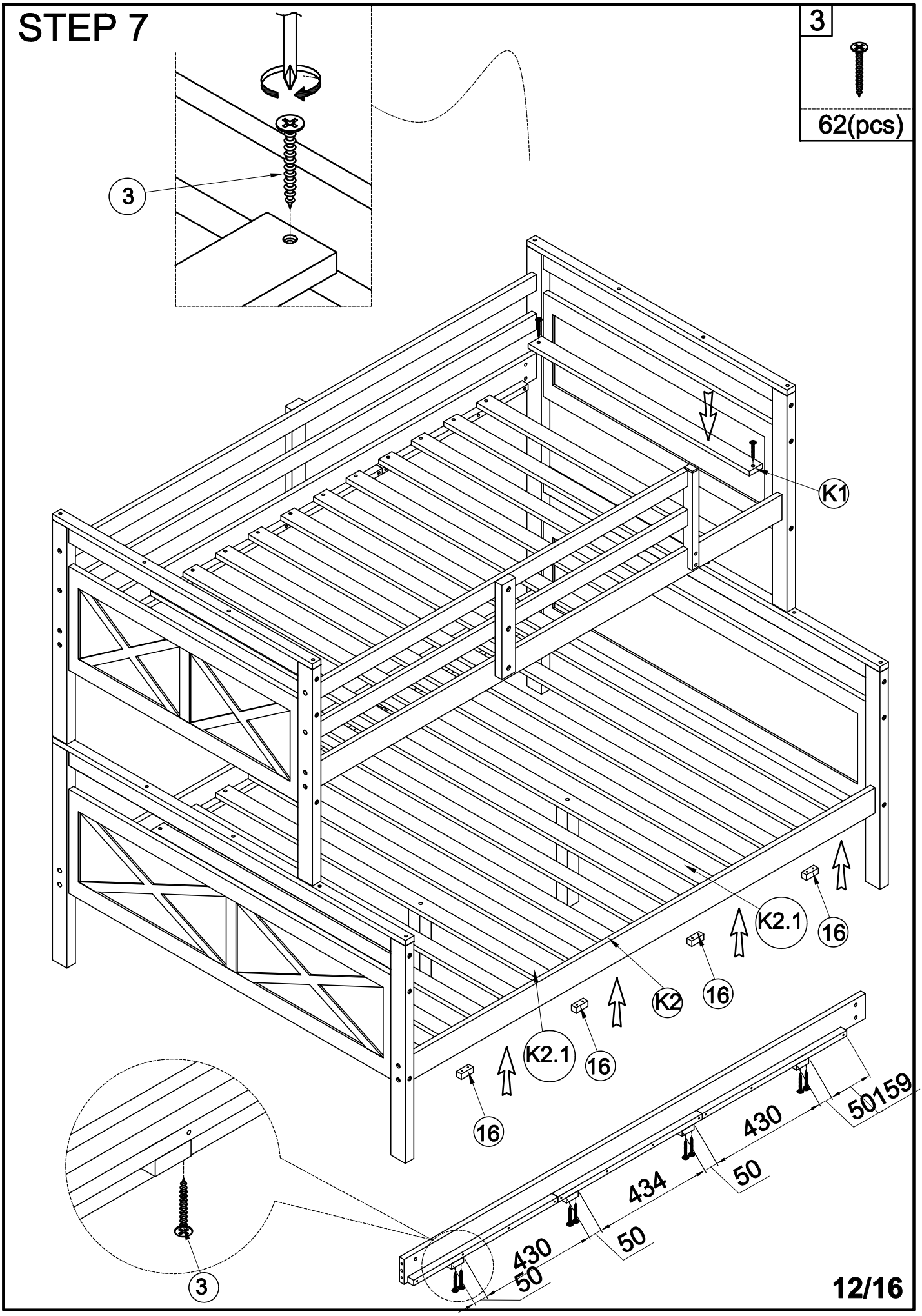

STEP 8-1

9	1
8(pcs)	16(pcs)

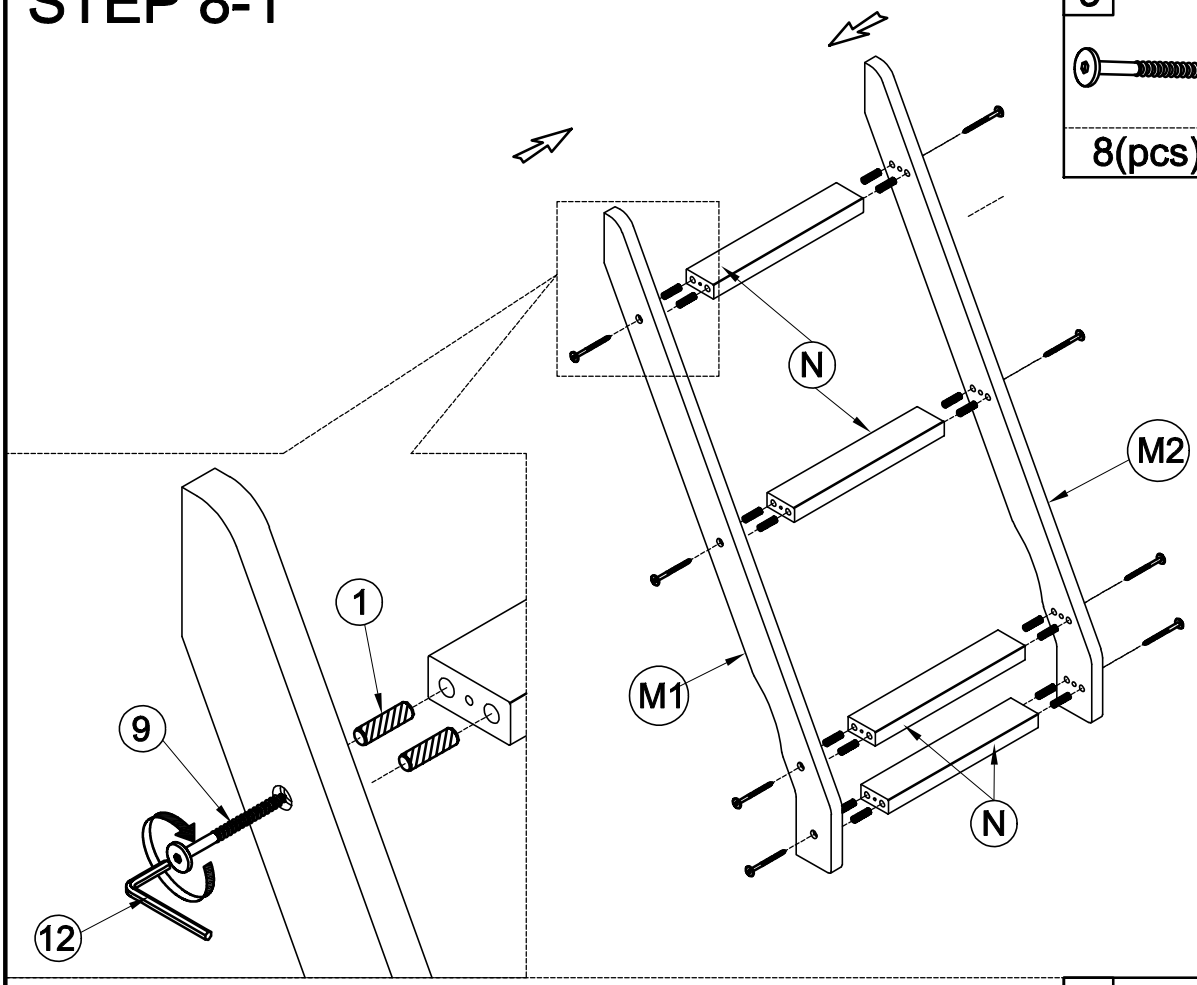

STEP 8-1

11	10
8(pcs)	4(pcs)

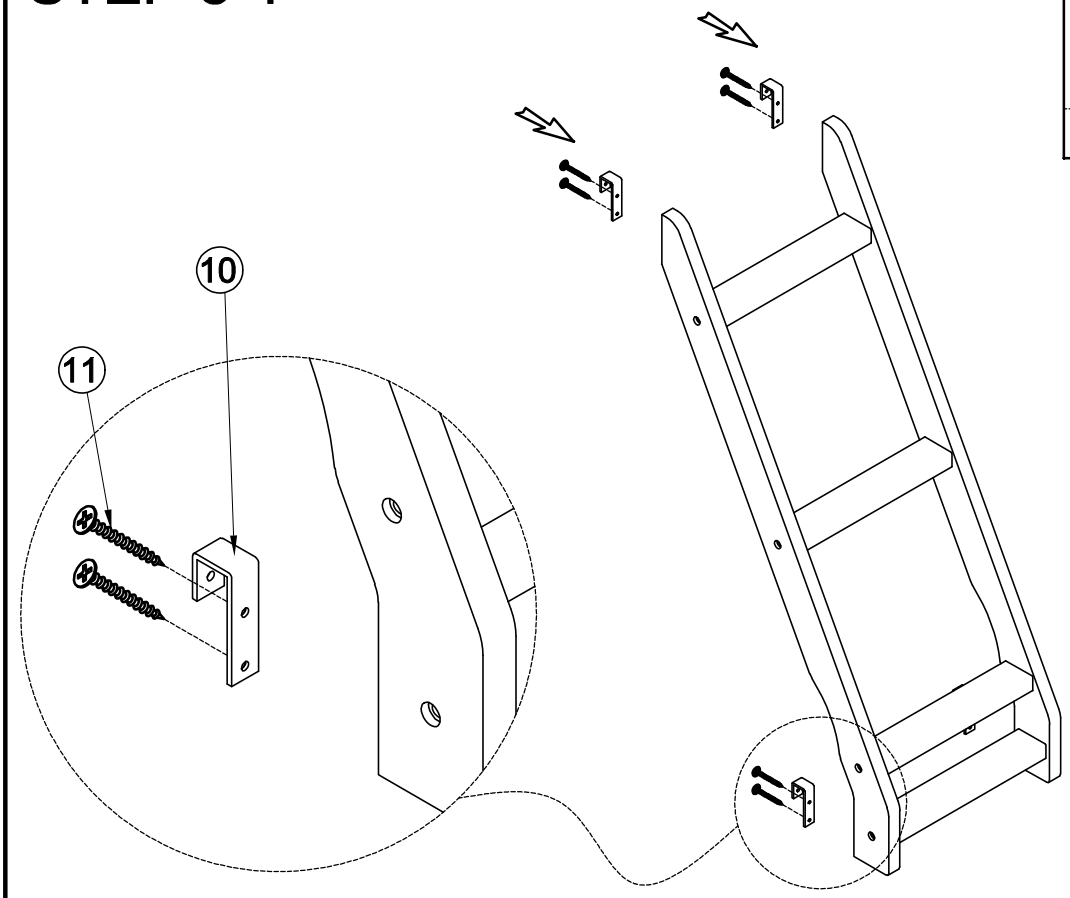

STEP 9

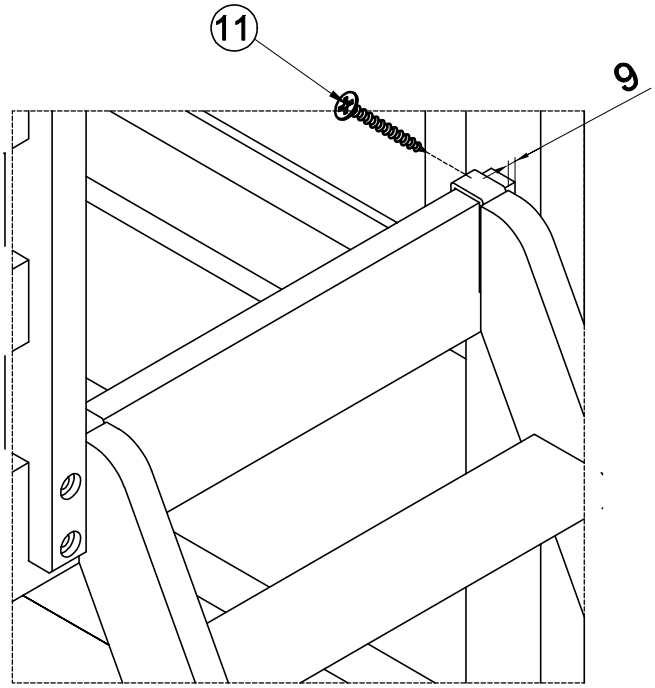

11
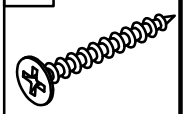
4(pcs)

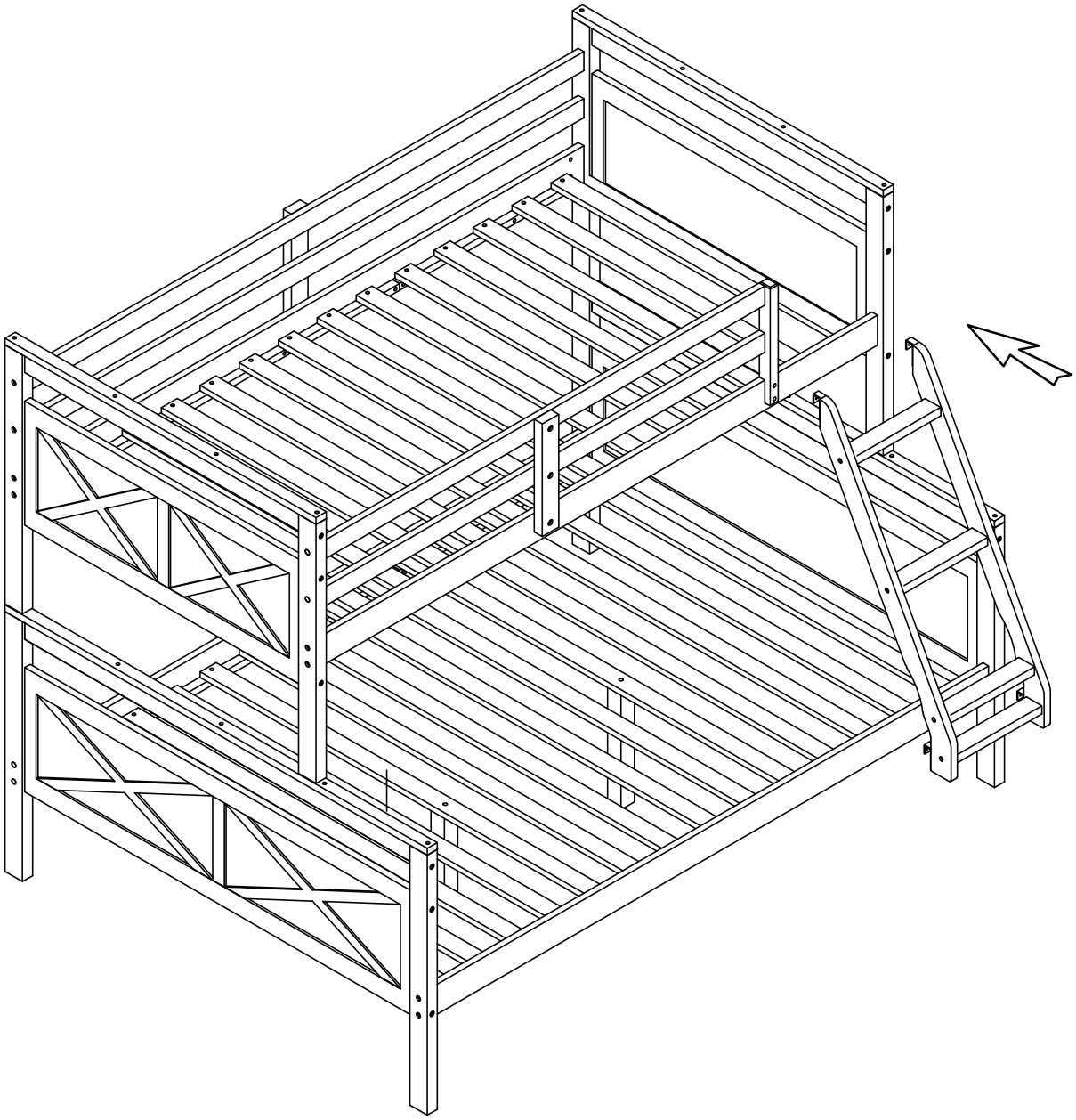

STEP 10

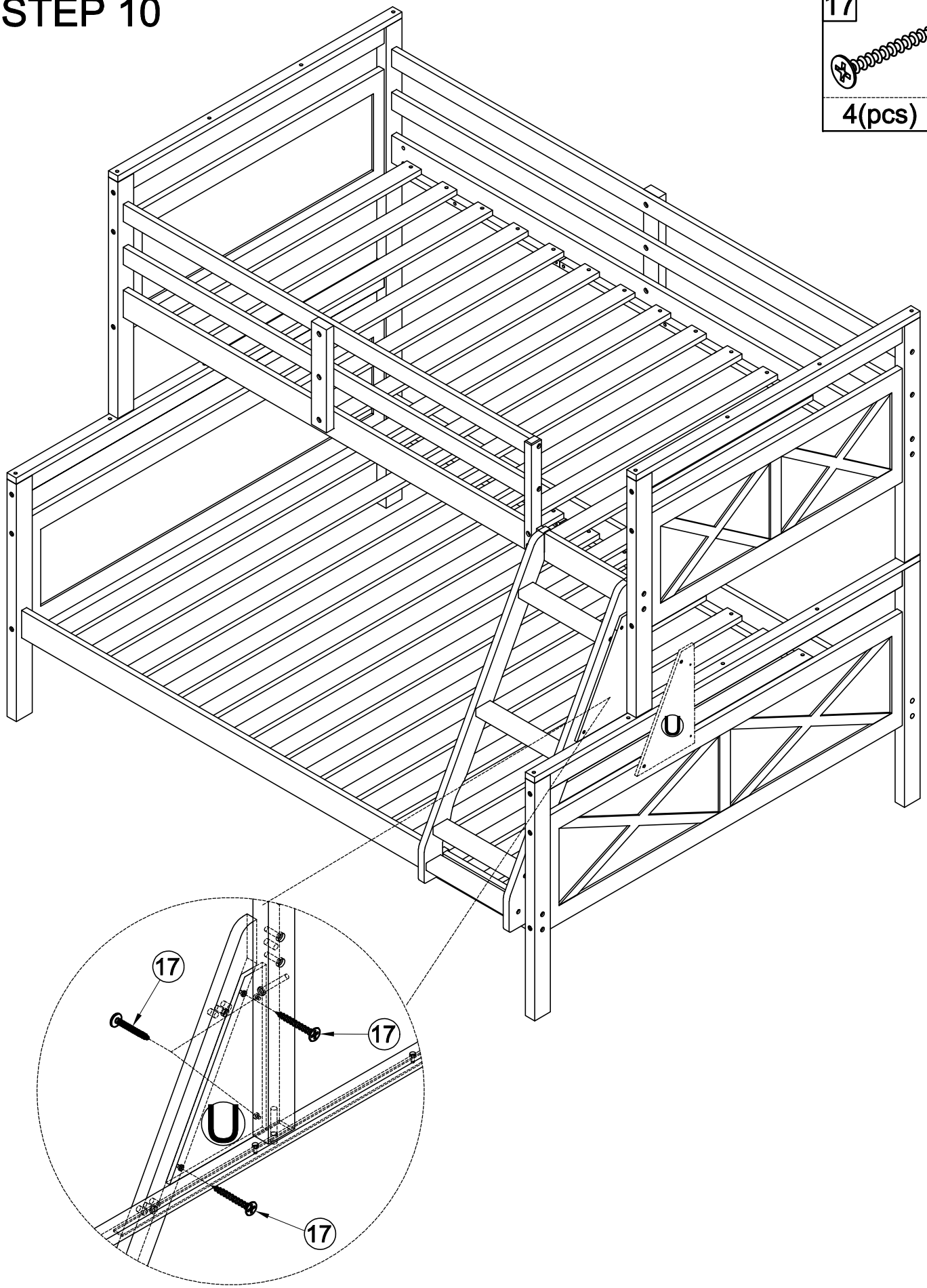

STEP 11-1

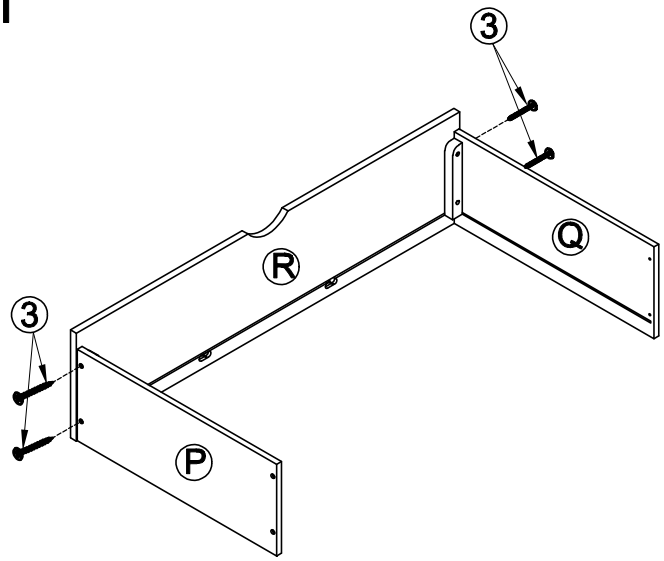

3
2x2(pcs)

STEP 11-2

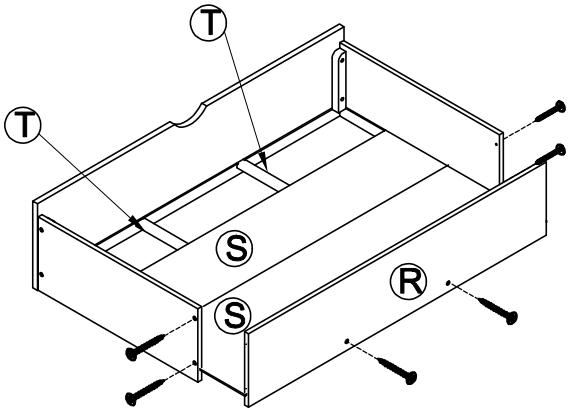

3
8x2(pcs)

STEP 11-3

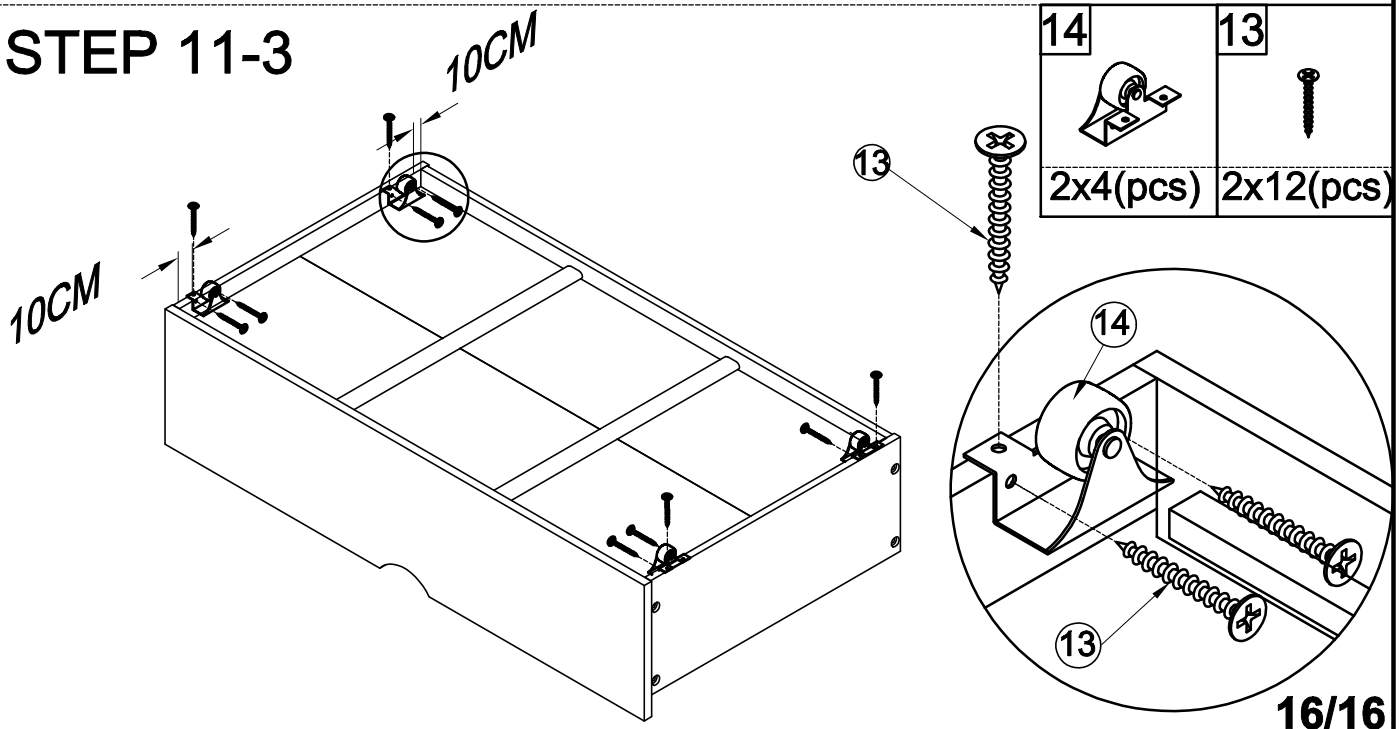

14	13
2x4(pcs)	2x12(pcs)