**TEAR SHEET**

**Connery 10" Ring Pendant**
Item # CHC 1610AB

Designer: Chapman & Myers

O/A Height: 23" - 120"
Fixture Height: 16"
Width: 10"
Canopy: 4.25" Round
Finishes: AB, BZ, PN, WHT
Socket: Dedicated LED
Wattage: 18w (1300lm)
Weight: 7 Pounds
Note: Height Not Adjustable After Installation

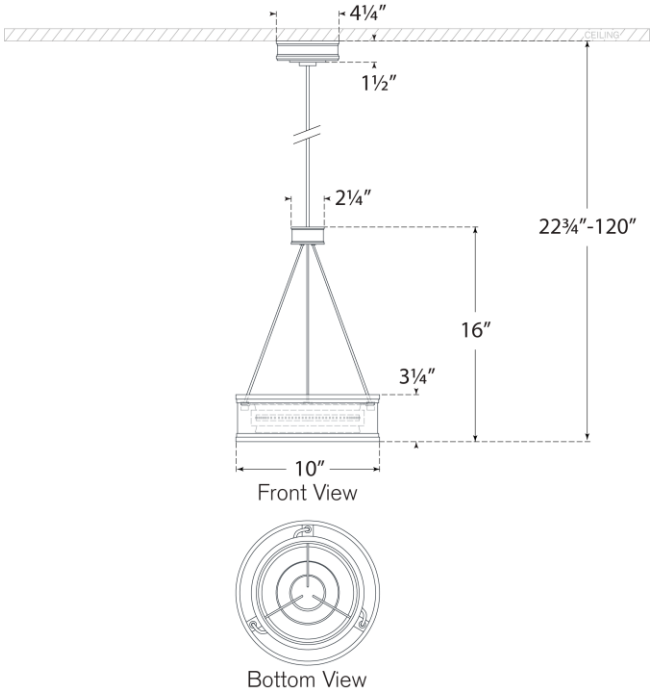


VISUAL COMFORT & CO.

DAMP LED 4