CLASSIC RECTANGULAR WOOD TABLE

MAKE YOUR HOUSE YOUR HOME

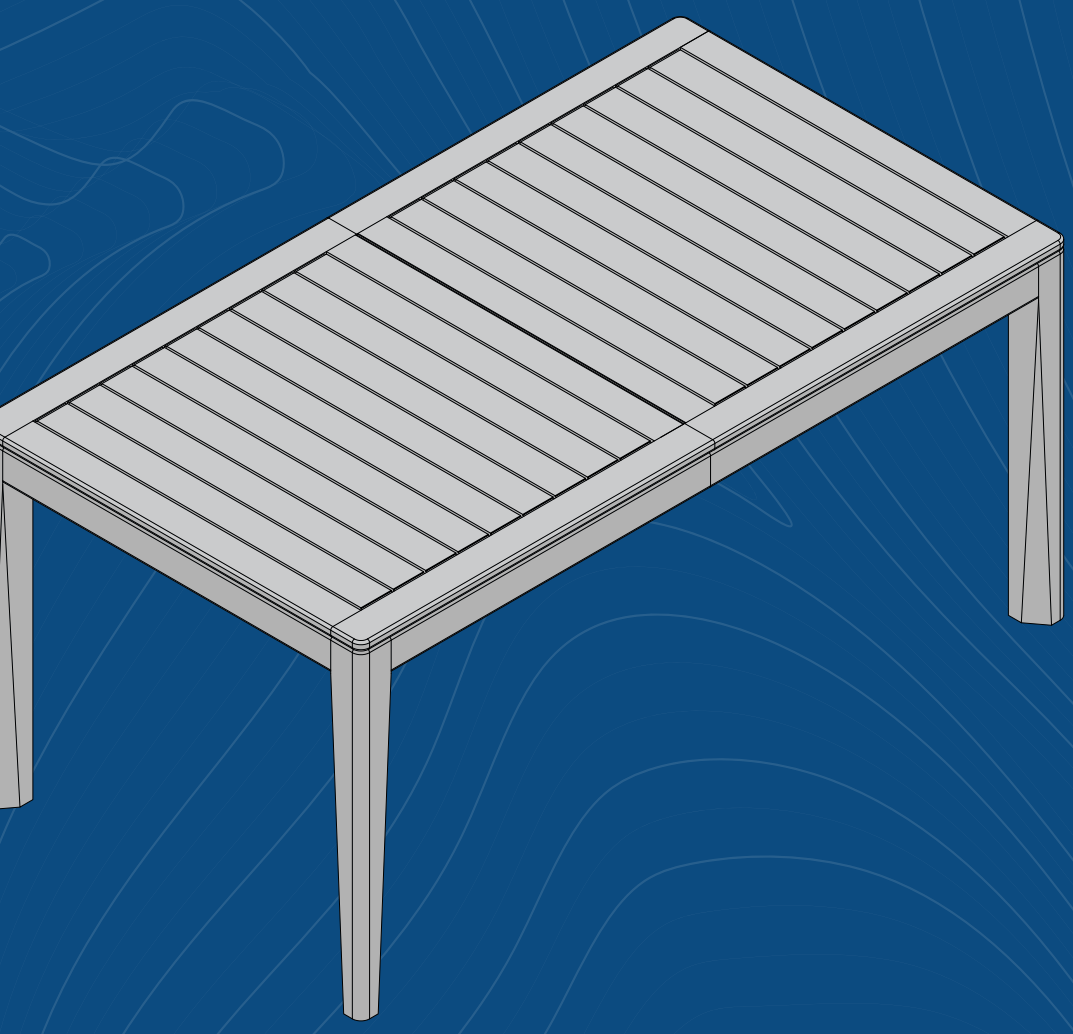

Easy Assembly

1-2 Assembly Recommended

USE & CARE

- Read all assembly and care instructions carefully before using this product. Save these instructions for future reference.
- Place the product on a smooth, level surface.
- Assemble on a soft, clean surface to avoid scratches or finish damage.
- Clean with a soft, damp cloth and mild cleanser only. Do not use harsh or abrasive cleaners, as they may damage the finish.
- Ensure all parts are included before discarding packaging.
- Use only compatible hardware to prevent product damage.
- Contains small parts – keep away from children. Adult assembly required.

Warning: Plastic packaging may cause suffocation - keep all packaging materials away from children and pets and dispose of them immediately after opening. This product requires at least two adults for lifting, carrying, or positioning; improper assembly or failure to follow instructions may result in injury.

WARNING – SAFETY INFORMATION

- Proper care, including avoiding direct sunlight and heat sources, ensures years of reliable use.
- Avoid dragging sharp or rough objects across the surface.
- Before each use, inspect the table and chair set for cracks, loose screws, or signs of wear.
- Do not exceed the recommended weight capacity of the table and chairs. Excessive weight may cause instability, damage, or personal injury.
- Do not stand, climb, kneel, lean or jump on the product. This product is not designed to support body weight beyond its intended use.
- Children should be supervised at all times. Do not allow children to climb, rock, or misuse the table and chair.

Please note: Failure to follow these warnings may result in damage, injury, or reduced product lifespan. The manufacturer shall not be liable for improper use.

WARRANTY INFORMATION

- Warranty covers defects in materials or workmanship under normal use.
- Valid only for the original purchaser and for products bought from authorized retailers.
- Not covered: normal wear, misuse, accidents, improper care, unauthorized repair, or modification. Is not liable for indirect, incidental, or consequential damages.
- Proof of purchase and photos of defects are required for claims.
- Replacement or repair will be provided at our discretion after verification
- Any modification to the product or failure to follow these care instructions will void the warranty.

You can find full details about our satisfaction guarantee and warranty in the product information section for your reference.

Our qualified staff is ready to assist you with any technical issues during installation or configuration — just reach out to us.

HARDWARE LIST

A	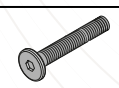	M8*60 Bolt	12	E		Flat Washer M8.5x20x2	8
B		M8*35 Bolt	12	F		Plastic Washer M10x20x1	12
C		Nut M13	8	G	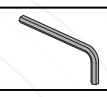	Allen Key M4	2
D		Spring Washer M8.5x13x2	8	H		Wrench M13	1

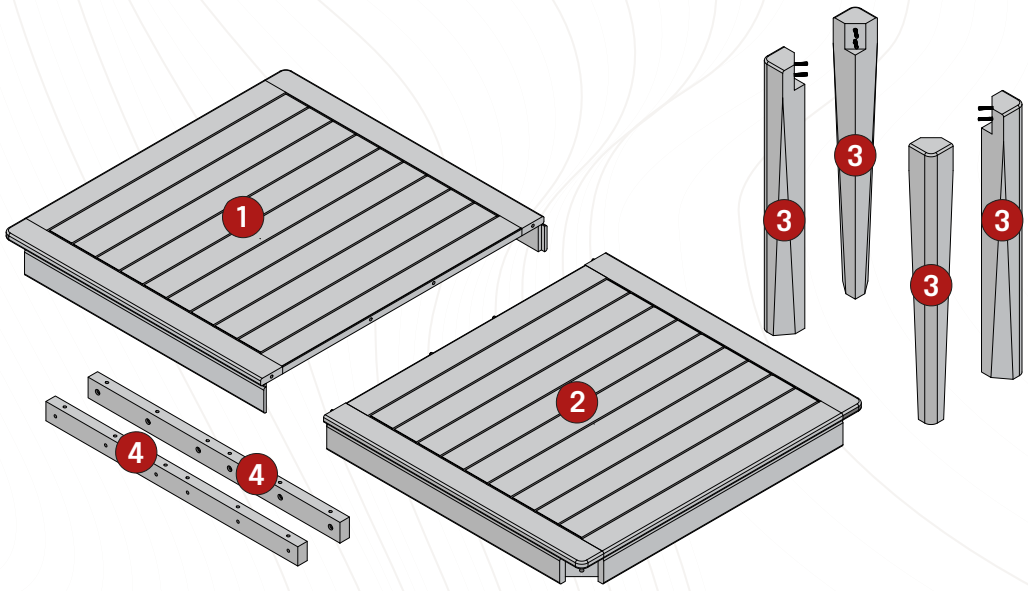

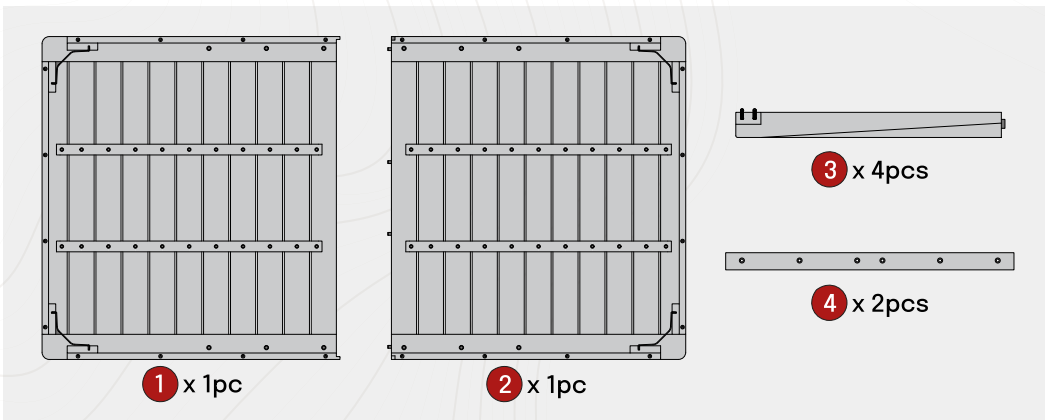

STEP 1

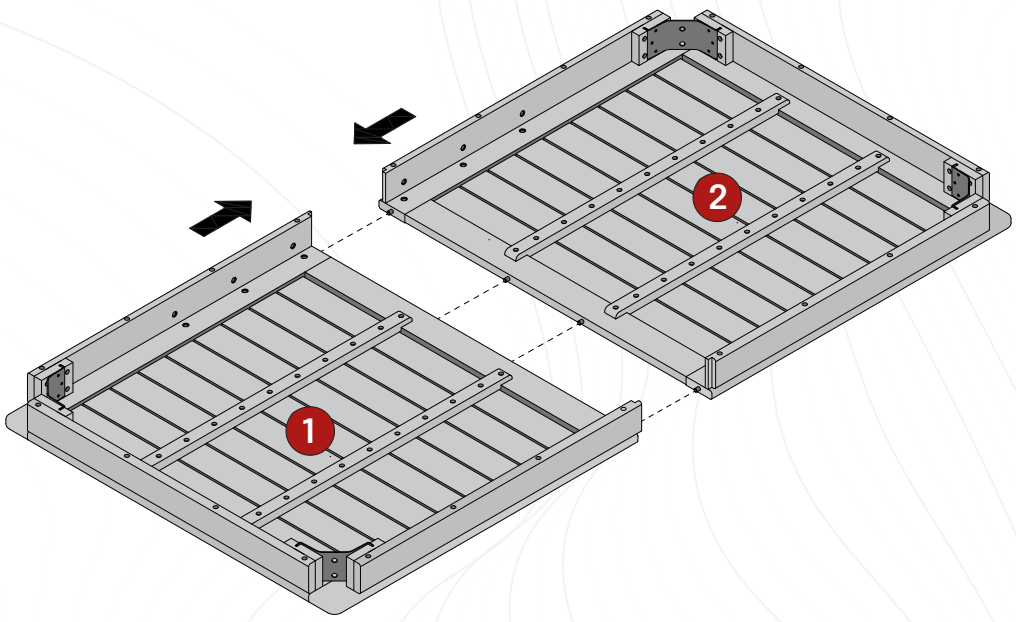

STEP 2

Place plastic washer on bolts prior to installation.
Do not fully tighten bolts until Step 3.

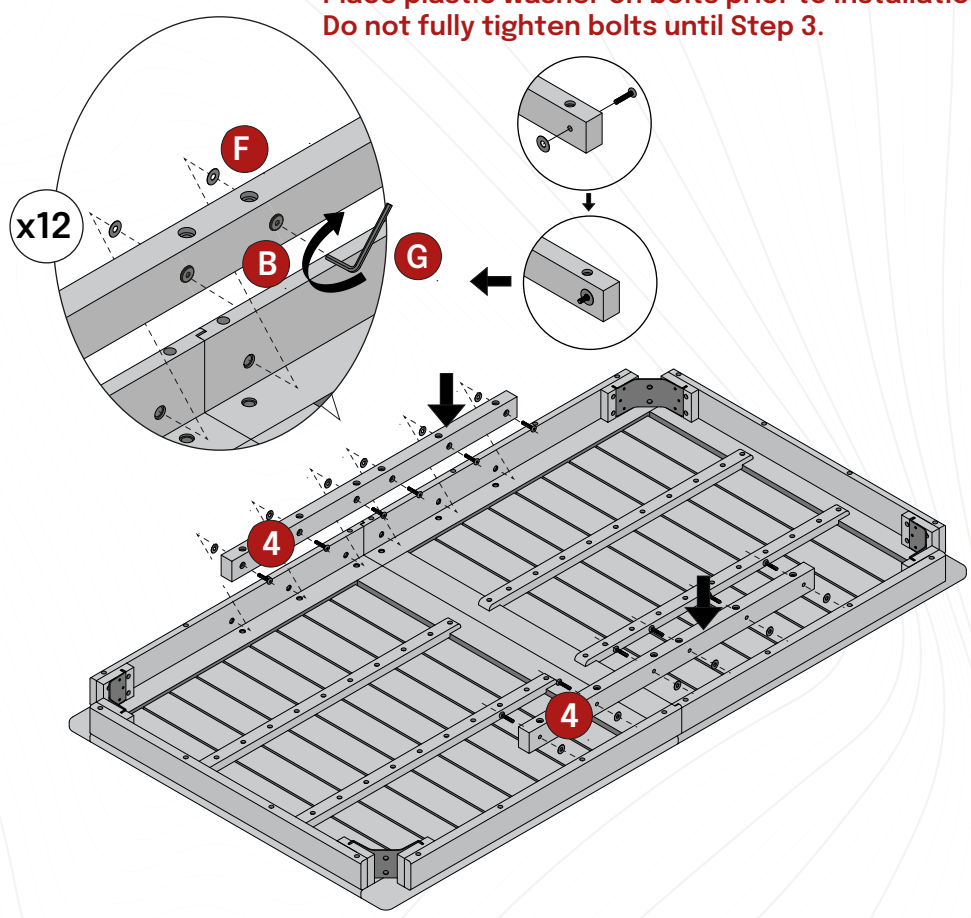

STEP 3

Fully tighten all bolts.

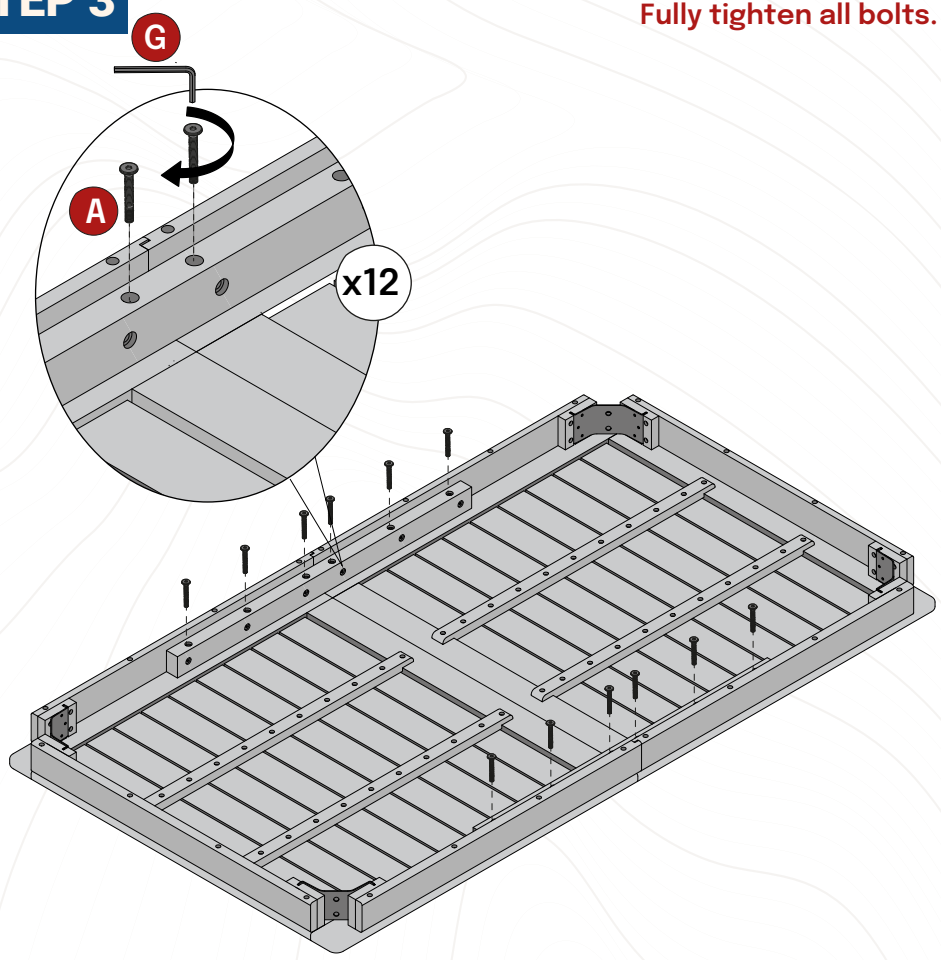

STEP 4

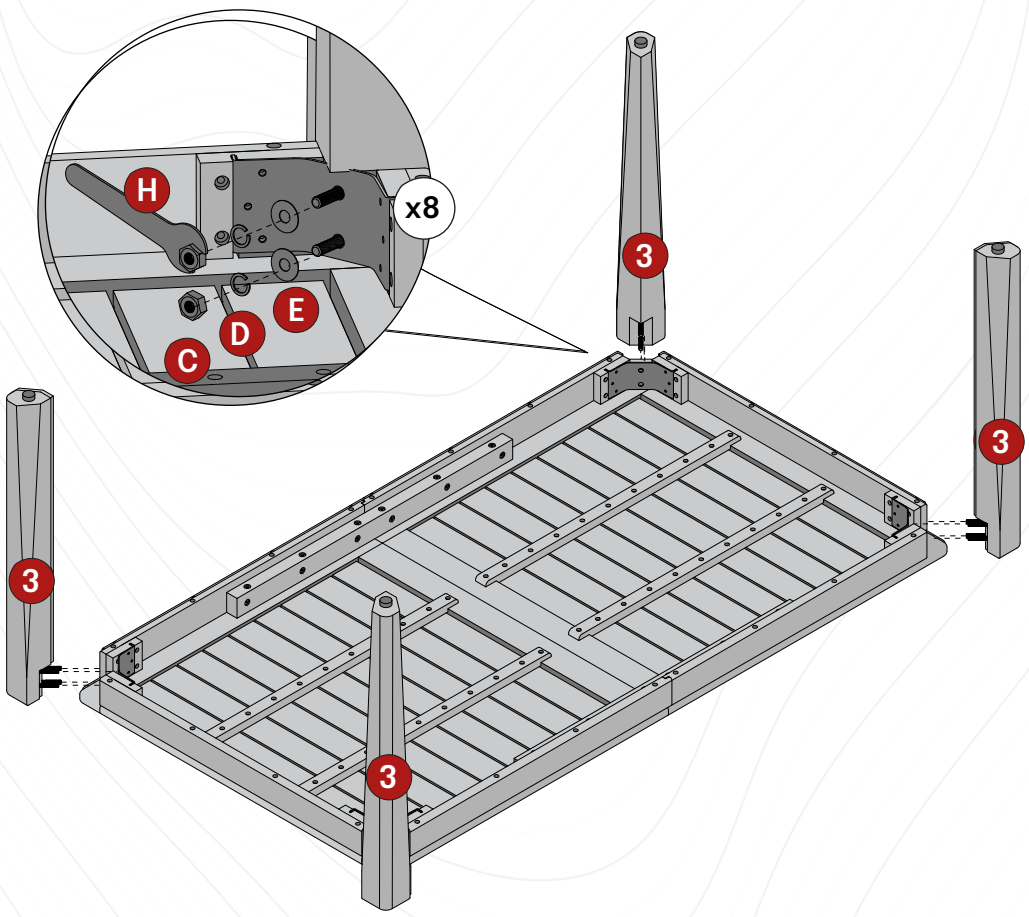
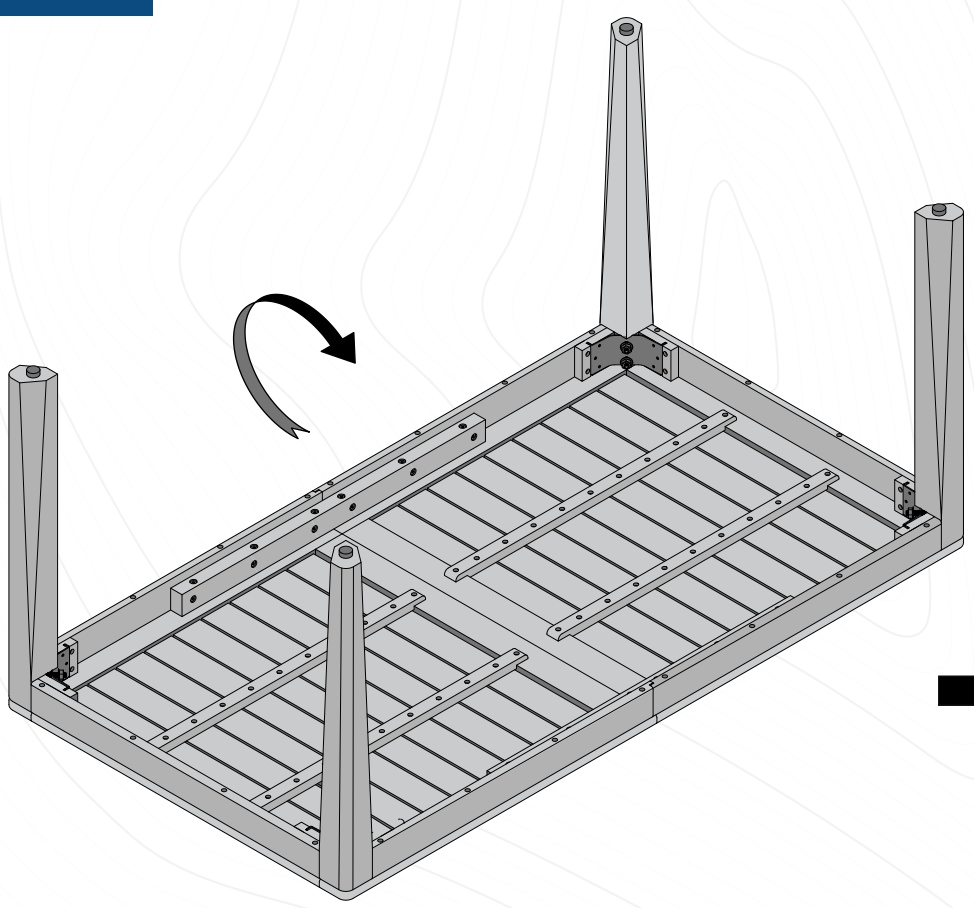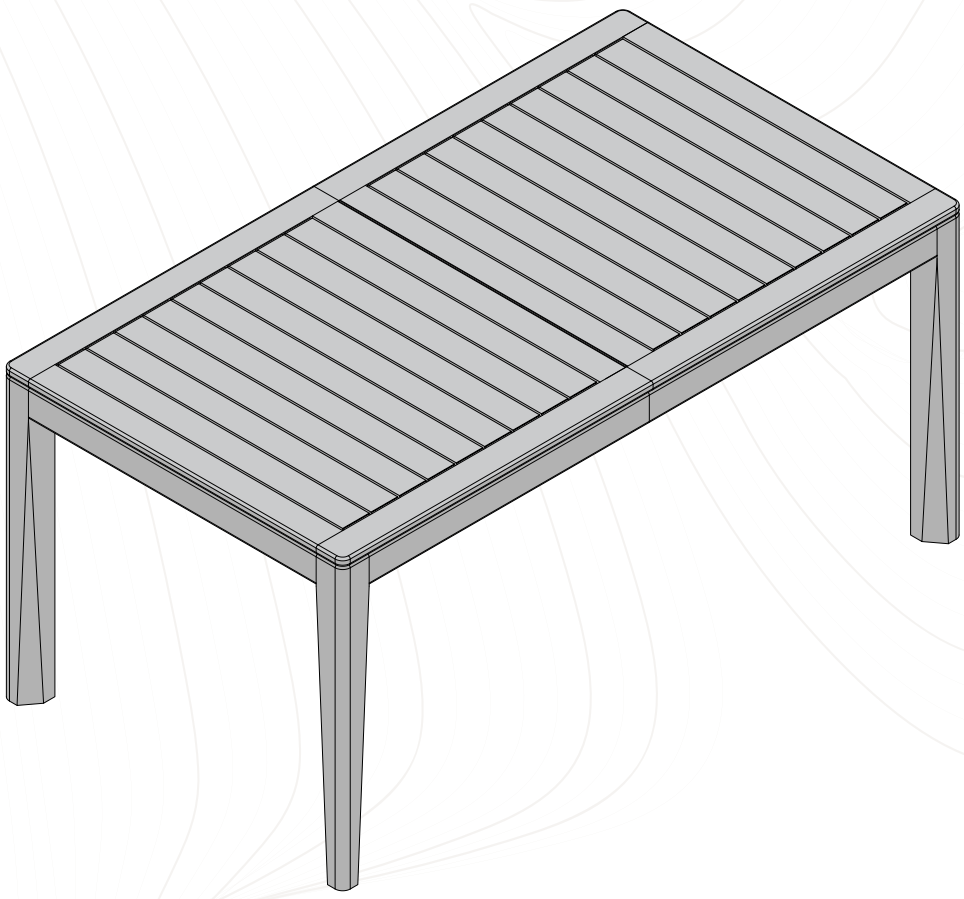
STEP 5