# KIDS SLIDE

## Instruction manual

SS-01

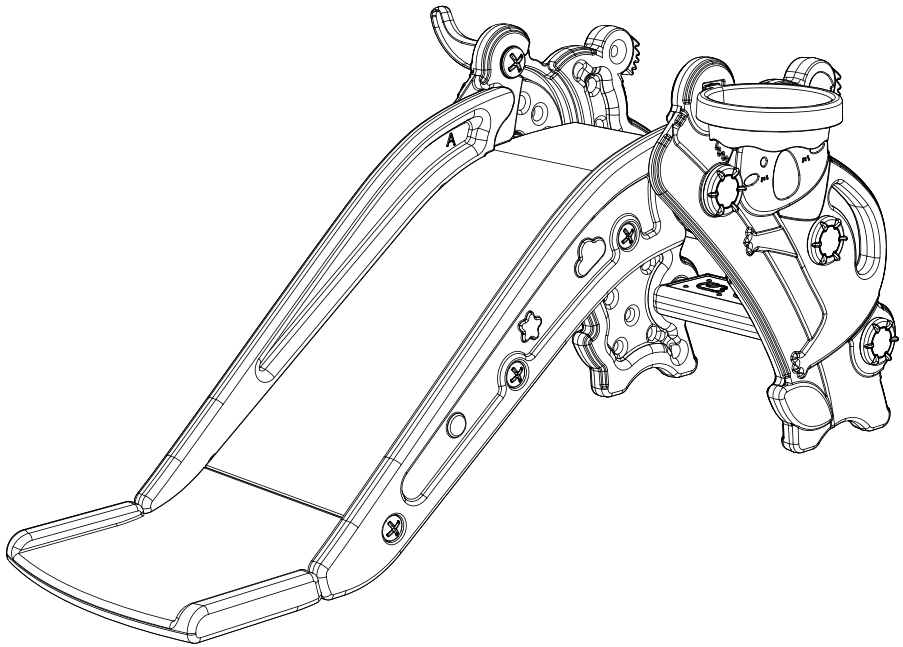

**E-mail Service : toddlerslide@gmail.com**

This product conforms to the safety requirements of CPSIA, ASTM F963-17

Please read and keep the manual properly, it contains important information.

## MAINTENANCE INSTRUCTIONS

1. Check the product regularly to prevent loose and broken components.
2. Use mild soap and water for daily cleaning.
3. The following examines are required at the beginning of each season (twice a month)

(1)Check if any parts are missing or broken.

(2)Check if all the connection parts are tight.

## ⚠ WARNING

1. CHOKING HAZARD-Small parts. Sharp points.Only for adults assemble it and the product should be used under the supervision of an adult.
2. Children on this product should not wear a scarf, gloves, cloak, or any clothes with long stripes.
3. Children on this product should not wear necklaces or hang anything around the neck.
4. **MAKE SURE** the surface of the product is dry and free of foreign objects before use Stay away from fire.
5. **MAKE SURE** all the connection parts are tightly assembled before allowing children to play on them.
6. **DO NOT** cut, heat, or change the shape of the product.
7. **DO NOT** use a jump rope, clothesline, etc. to hang items not specially designed for this product.
8. **DO NOT** place the product in direct sunlight to reduce the risk of sun-burn.
9. **DO NOT** use the product in an unintended way.
10. **DO NOT** use the product when it is wet or on a snow day.
11. Falling to hard ground like a concrete floor may cause severe injury or even death. Close supervision of an adult is required during use.
12. Stop using the product when the temperature is below 32 ℉ (0 ℃), because the plastic material may get more fragile and easier to break.
13. **DO NOT** leave the toddler slide outdoors exposed to direct sunlight for months. Store it indoors or in a warehouse when not in use.

# INFORMATION BEFORE ASSEMBLING

**Check if following spare parts are in the box:**

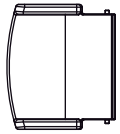

① x1

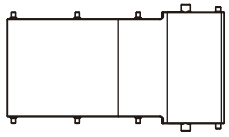

② x1

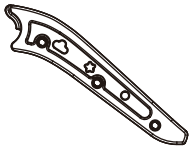

③ x2

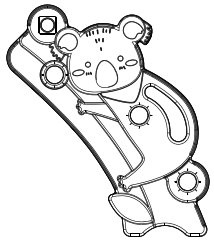

④ x2

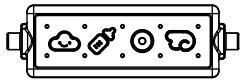

⑤ x2



⑥ x1



⑦ x1

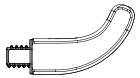

⑧ x1

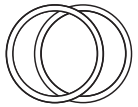

⑨ x2

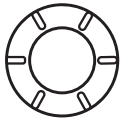

⑩ x6



(Small)



(Large)



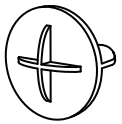

⑪ x6

⑫ x2

⑬ x1

⑭ x1

# ASSEMBLING

**STEP 1**

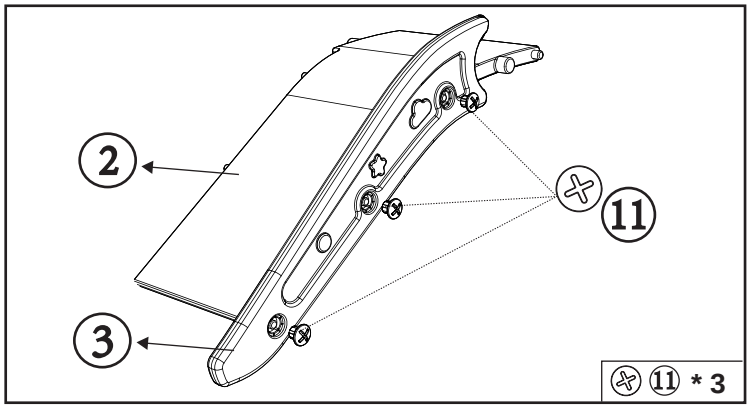


**STEP 2**

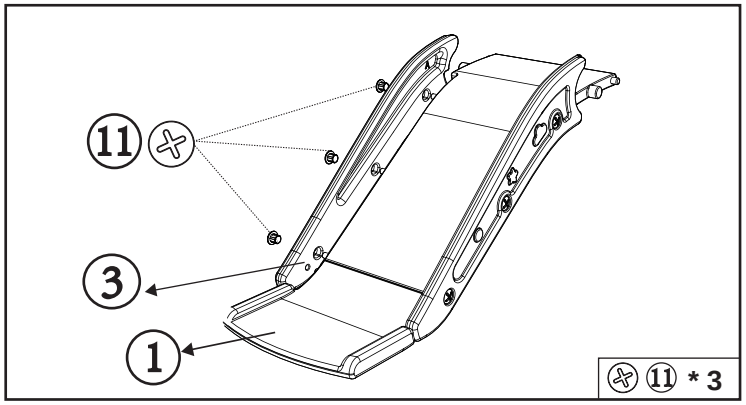


**STEP 3**

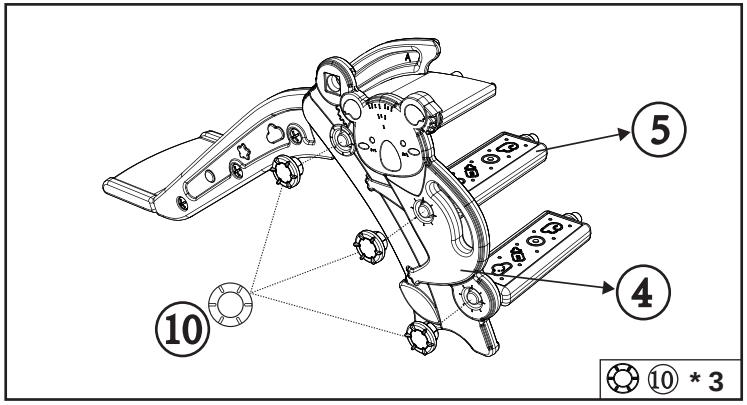

# ASSEMBLING

**STEP 4**

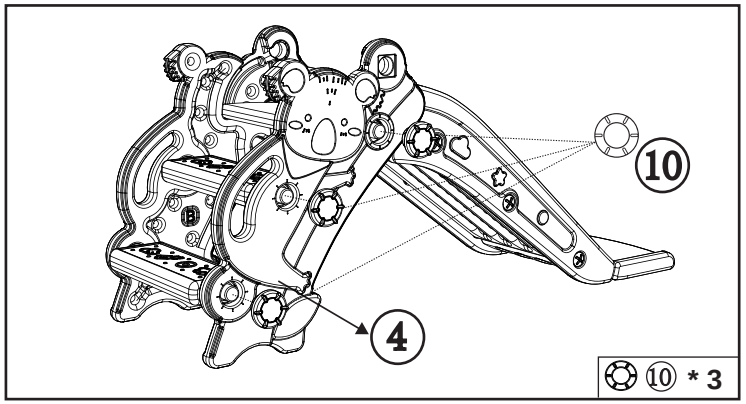


**STEP 5**

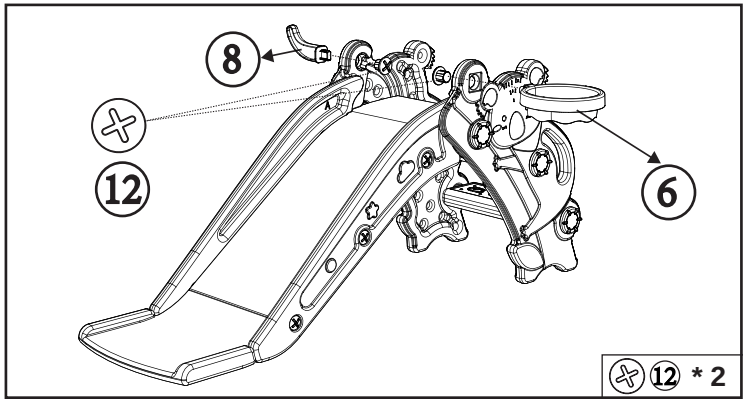


**STEP 6**

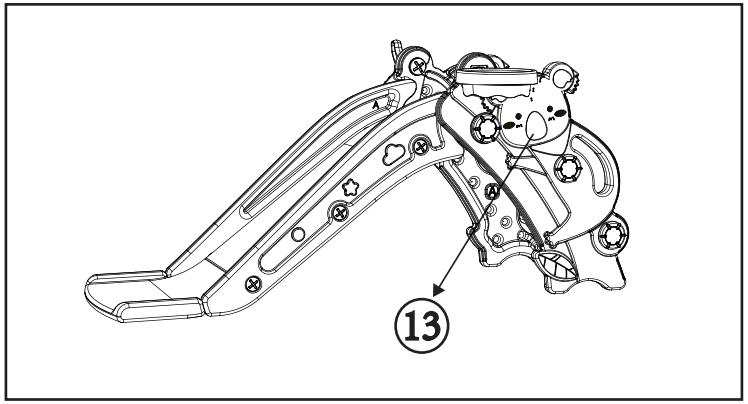


***THANK YOU***

*Thank you for purchasing the kid slide from our store. If you experience any problem while using it, please feel free to contact us. We will solve the problem for you quickly and provide the best customer service!*

**E-mail Service : toddlerslide@gmail.com**